STPS20H100C

Datasheet

100 V, 20 A power Schottky rectifier

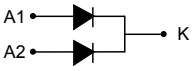

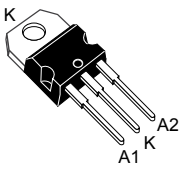

TO-220AB

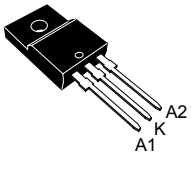

TO-220FPAB

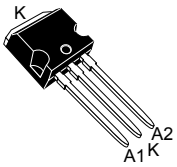

I^2PAK

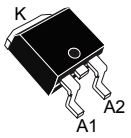

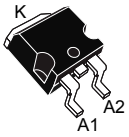

D^2PAK

Product status link
STPS20H100C

Product summary	
$I_{F(AV)}$	2 x 10 A
V_{RRM}	100 V
T_j (max)	175 °C
V_F (typ)	0.59 V

Features

- Negligible switching losses
- High junction temperature capability
- Low leakage current
- Good trade off between leakage current and forward voltage drop
- Avalanche rated
- Insulated package: TO-220FPAB
  - Insulating voltage = 2000 V_{RMS} sine
- ECOPACK®2 compliant component for D²PAK on demand

Applications

- Switching diode
- SMPS
- DC/DC converter
- LED lighting
- Adapter for notebook and game station

Description

Dual center tap Schottky rectifier designed for high frequency miniature switch mode power supplies such as adaptors and on-board DC-DC converters.

1 Characteristics

Table 1. Absolute ratings (limiting values, per diode, at 25 °C, unless otherwise specified)

Symbol	Parameter				Value	Unit
V_{RRM}	Repetitive peak reverse voltage				100	V
$I_{F(RMS)}$	Forward rms current				30	A
$I_{F(AV)}$	Average forward current δ = 0.5, square wave	TO-220AB, D^2PAK, I^2PAK	T_C = 160 °C	Per diode	10	A
				Per device	20	
		TO-220FPAB	T_C = 145 °C	Per diode	10	
			T_C = 125 °C	Per device	20	
I_{FSM}	Surge non repetitive forward current	tp = 10 ms sinusoidal			250	A
P_{ARM}	Repetitive peak avalanche power	tp = 10 µs, T_j= 125 °C			775	W
T_{stg}	Storage temperature range				-65 to + 175	°C
T_j	Maximum operating junction temperature (1)				+ 175	°C

1. *$(dP_{tot}/dT_j) < (1/R_{th(j-a)})$ condition to avoid thermal runaway for a diode on its own heatsink.*

Table 2. Thermal resistance parameter

Symbol	Parameter			Value	Unit
$R_{th(j-c)}$	Junction to case	TO-220AB, D^2PAK, I^2PAK	Per diode	1.6	°C/W
		TO-220FPAB		4	
		TO-220AB, D^2PAK, I^2PAK	Total	0.9	
		TO-220FPAB		3.2	
$R_{th(c)}$	Coupling	TO-220AB, D^2PAK, I^2PAK	-	0.15	°C/W
		TO-220FPAB		2.5	

When the diodes 1 and 2 are used simultaneously :

$\Delta Tj(diode\ 1) = P(diode1) \times R_{th(j-c)}(Per\ diode) + P(diode\ 2) \times R_{th(c)}$

For more information, please refer to the following application note :

- AN5088 : Rectifiers thermal management, handling and mounting recommendations

Table 3. Static electrical characteristics (per diode)

Symbol	Parameter	Test conditions		Min.	Typ.	Max.	Unit
I_R (1)	Reverse leakage current	T_j = 25 °C	$V_R = V_{RRM}$	-		4.5	µA
		T_j = 125 °C		-	2	6	mA
V_F (2)	Forward voltage drop	T_j = 25 °C	I_F = 10 A	-		0.77	V
			I_F = 20 A	-		0.88	
		T_j = 125 °C	I_F = 10 A	-	0.59	0.64	
			I_F = 20 A	-	0.67	0.73	

1. *Pulse test: t_p = 5 ms, δ < 2%*
2. *Pulse test: t_p = 380 µs, δ < 2%*

To evaluate the conduction losses use the following equation:

$P = 0.55 \times I_{F(AV)} + 0.009\ I_F{}^2{}_{(RMS)}$

For more information, please refer to the following application notes related to the power losses :

- AN604: Calculation of conduction losses in a power rectifier
- AN4021: Calculation of reverse losses on a power diode

1.1 Characteristics (curves)

Figure 1. Average forward power dissipation versus average forward current (per diode)

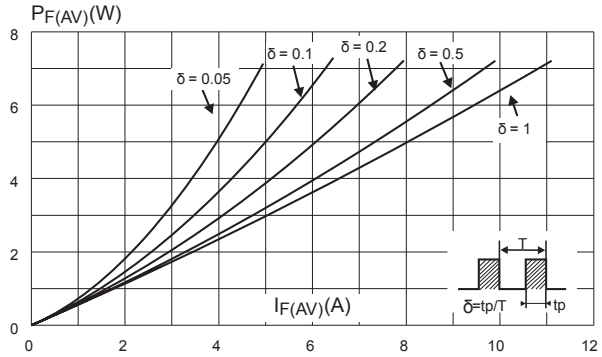

Figure 2. Average forward current versus ambient temperature (δ = 0.5, per diode)

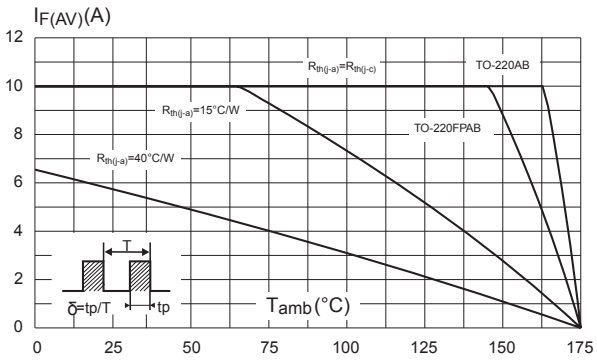

Figure 3. Normalized avalanche power derating versus pulse duration (T_j = 125 °C)

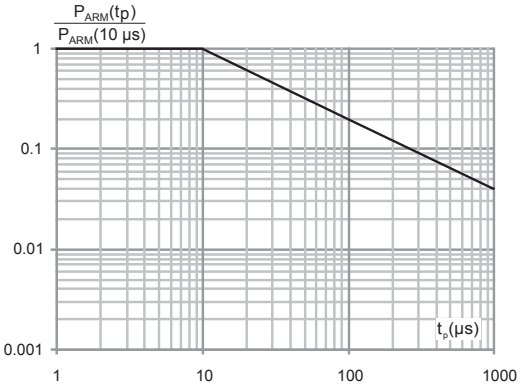

Figure 4. Relative variation of thermal impedance junction to case versus pulse duration

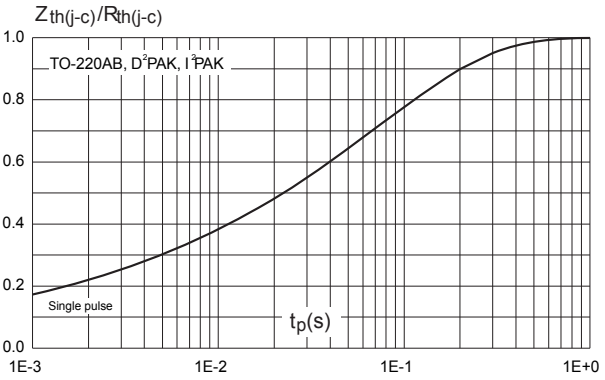

Figure 5. Relative variation of thermal impedance junction to case versus pulse duration

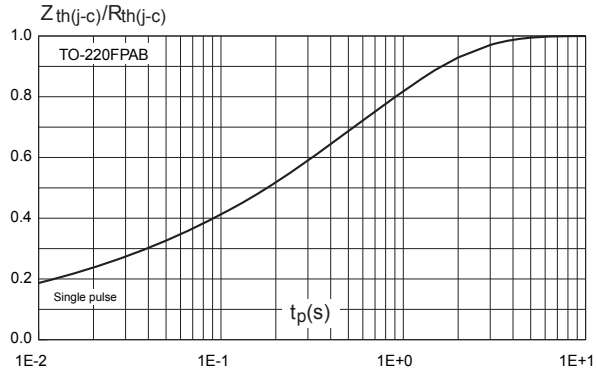

Figure 6. Reverse leakage current versus reverse voltage applied (typical values, per diode)

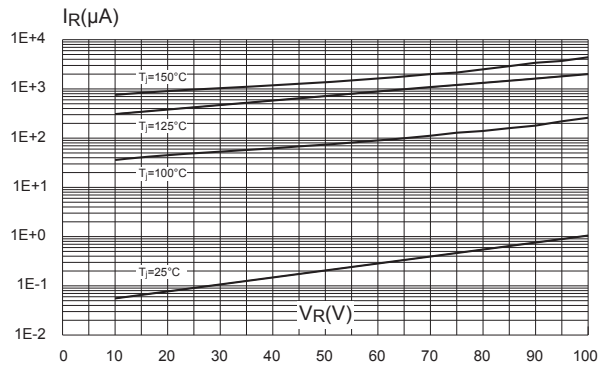

Figure 7. Junction capacitance versus reverse voltage applied (typical values, per diode)

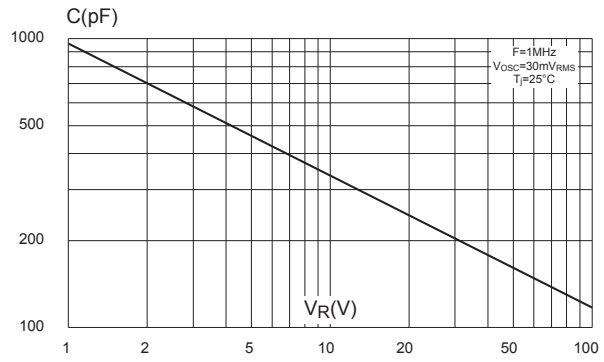

Figure 8. Forward voltage drop versus forward current (maximum values, per diode)

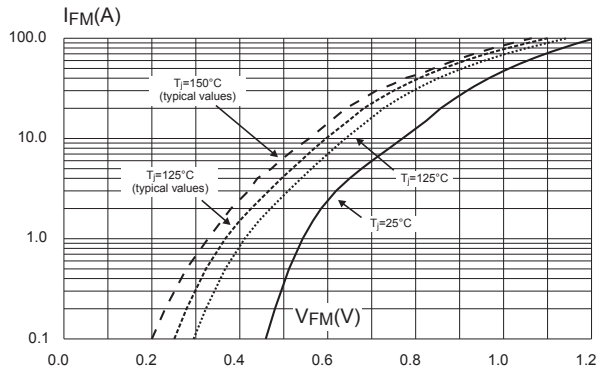

Figure 9. Thermal resistance junction to ambient versus copper surface under tab (epoxy printed board FR4, e_{Cu} = 35 µm) (D²PAK)

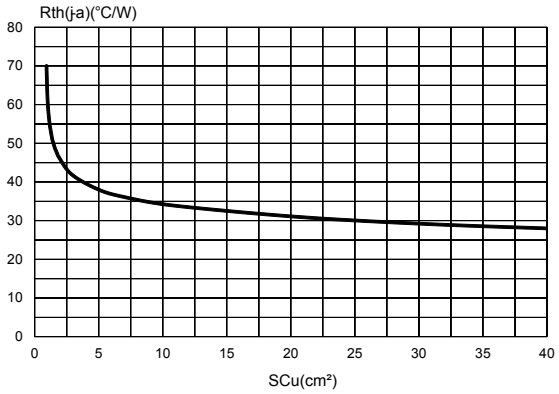

2 Package information

In order to meet environmental requirements, ST offers these devices in different grades of ECOPACK packages, depending on their level of environmental compliance. ECOPACK specifications, grade definitions and product status are available at: www.st.com. ECOPACK is an ST trademark.

2.1 D²PAK package information

- Cooling method: by conduction (C)
- Epoxy meets UL 94,V0

Figure 10. D²PAK package outline

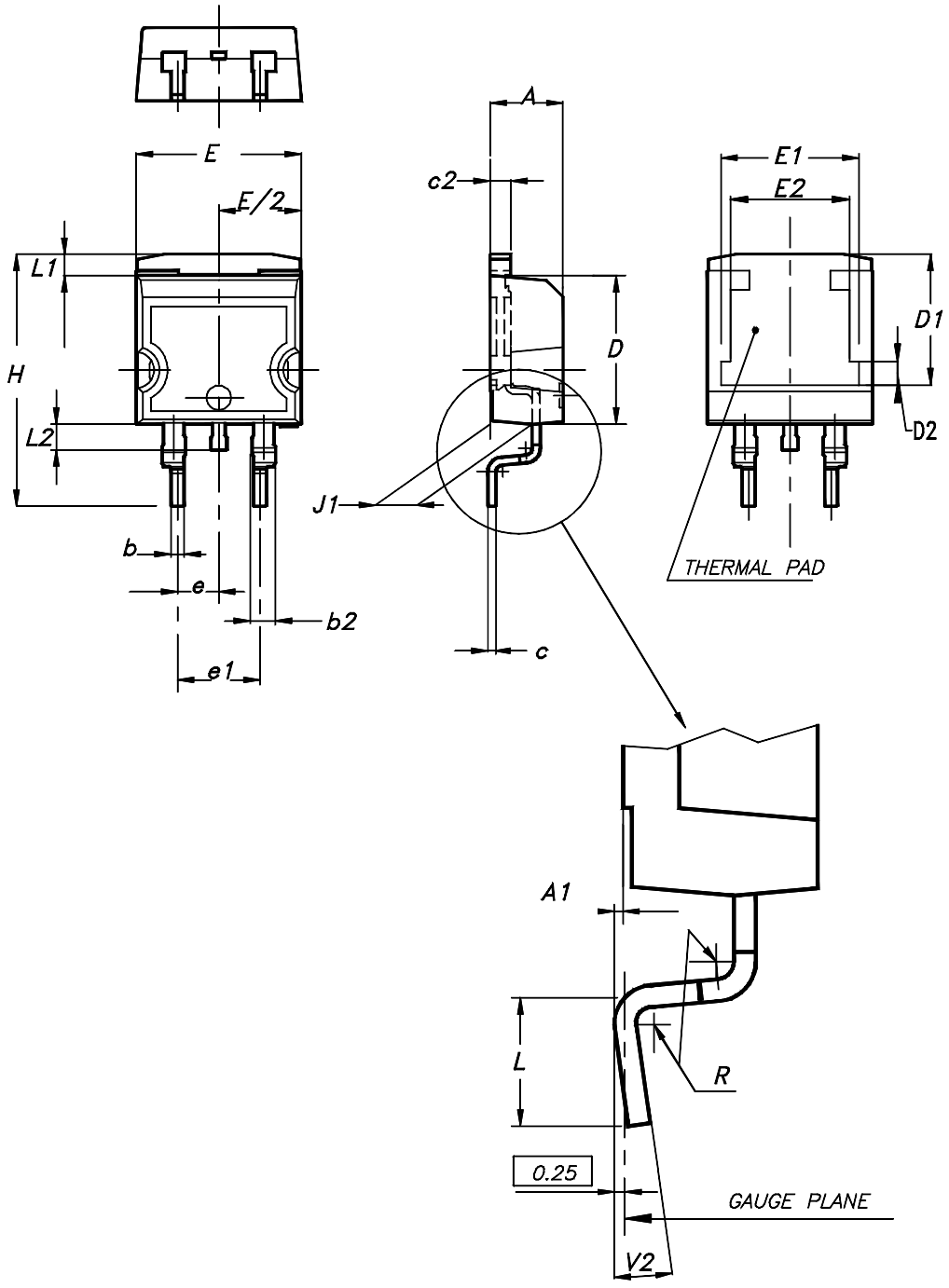

Table 4. **D²PAK package mechanical data**

Ref.	Dimensions			
	Millimeters		Inches	
	Min.	Max.	Min.	Max.
A	4.36	4.60	0.172	0.181
A1	0.00	0.25	0.000	0.010
b	0.70	0.93	0.028	0.037
b2	1.14	1.70	0.045	0.067
c	0.38	0.69	0.015	0.027
c2	1.19	1.36	0.047	0.053
D	8.60	9.35	0.339	0.368
D1	6.90	8.00	0.272	0.311
D2	1.10	1.50	0.043	0.060
E	10.00	10.55	0.394	0.415
E1	8.10	8.90	0.319	0.346
E2	6.85	7.25	0.266	0.282
e	2.54 typ.		0.100	
e1	4.88	5.28	0.190	0.205
H	15.00	15.85	0.591	0.624
J1	2.49	2.90	0.097	0.112
L	1.90	2.79	0.075	0.110
L1	1.27	1.65	0.049	0.065
L2	1.30	1.78	0.050	0.070
R	0.4 typ.		0.015	
V2	0°	8°	0°	8°

Figure 11. D²PAK Recommended footprint

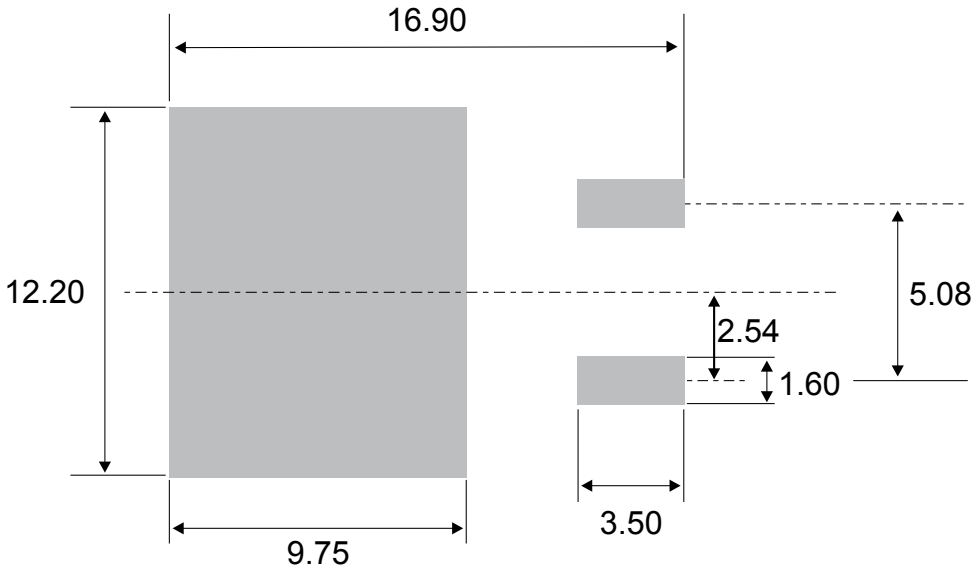

2.2 I²PAK package information

- Epoxy meets UL 94,V0
- Cooling method: by conduction (C)

Figure 12. I²PAK package outline

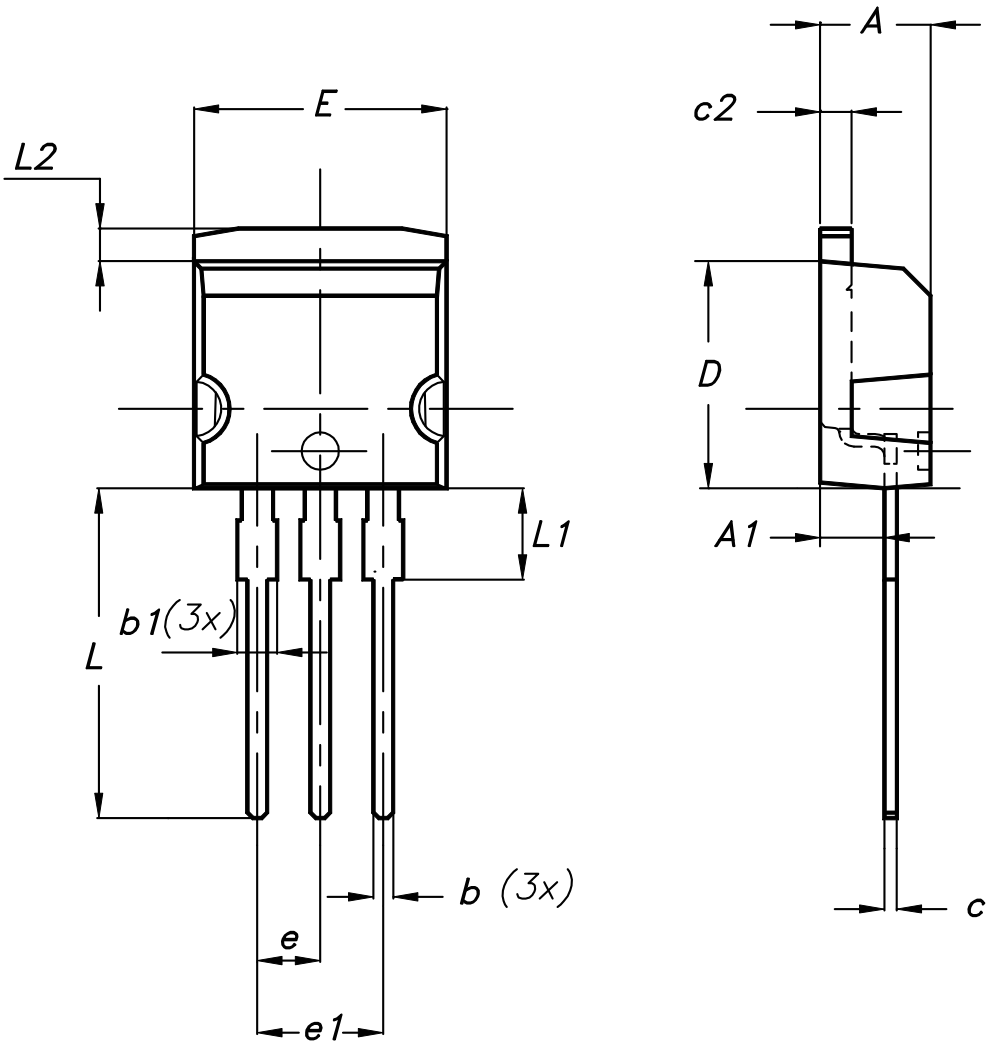

Table 5. I²PAK package mechanical data

Ref.	Dimensions			
	Millimeters		Inches (for reference only)	
	Min.	Max.	Min.	Max.
A	4.40	4.60	0.173	0.181
A1	2.40	2.72	0.094	0.107
b	0.61	0.88	0.024	0.035
b1	1.14	1.70	0.044	0.067
c	0.49	0.70	0.019	0.028
c2	1.23	1.32	0.048	0.052
D	8.95	9.35	0.352	0.368
e	2.40	2.70	0.094	0.106
e1	4.95	5.15	0.195	0.203
E	10.00	10.40	0.394	0.409
L	13.00	14.00	0.512	0.551
L1	3.50	3.93	0.138	0.155
L2	1.27	1.40	0.050	0.055

2.3 TO-220AB package information

- Cooling method: by conduction (C)
- Epoxy meets UL 94,V0
- Recommended torque value: 0.55 N·m
- Maximum torque value: 0.7 N·m

Figure 13. **TO-220AB package outline**

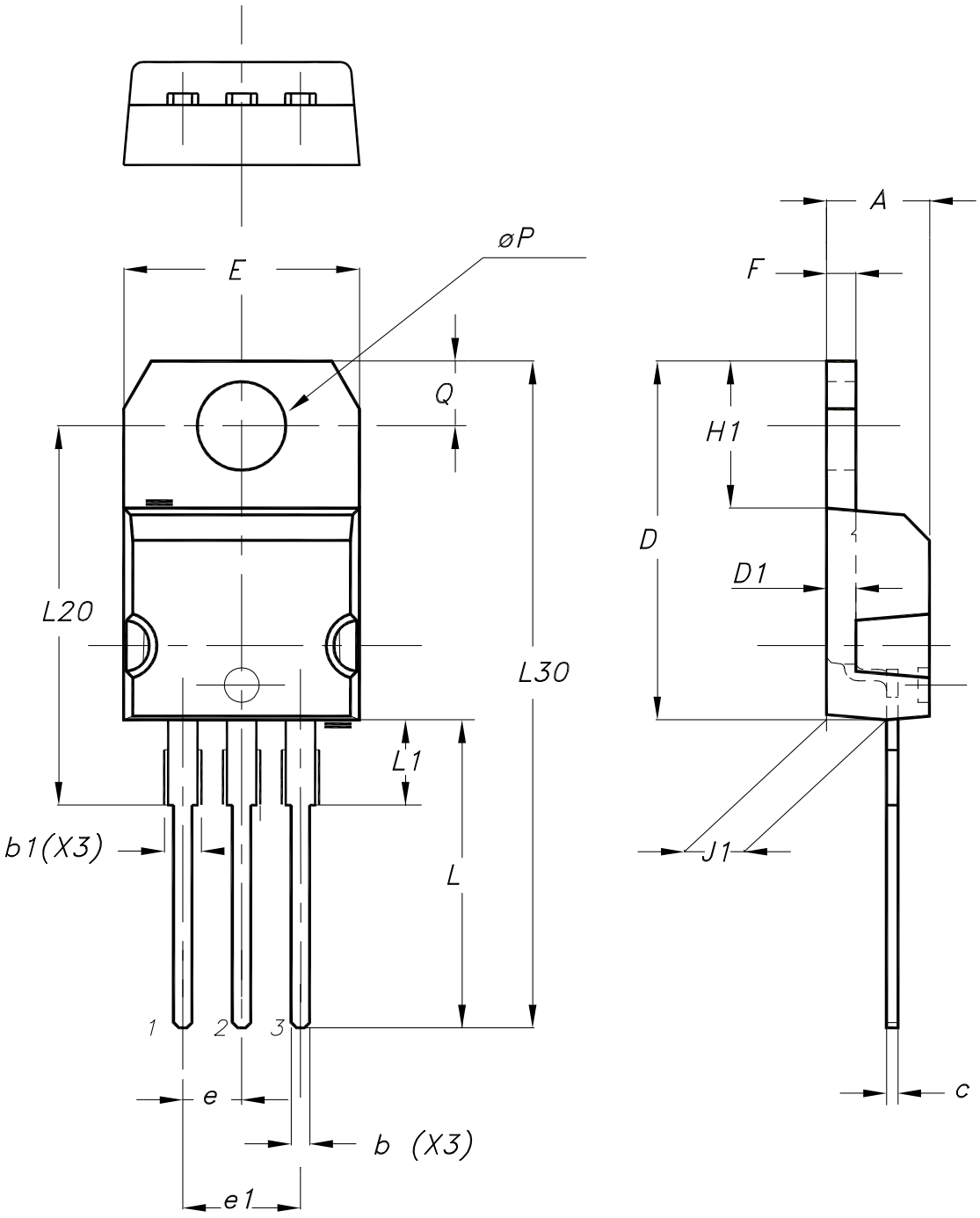

Table 6. TO-220AB package mechanical data

Ref.	Dimensions			
	Millimeters		Inches	
	Min.	Max.	Min.	Max.
A	4.40	4.60	0.173	0.181
b	0.61	0.88	0.240	0.035
b1	1.14	1.55	0.045	0.061
c	0.48	0.70	0.019	0.028
D	15.25	15.75	0.600	0.620
D1	1.27 typ.		0.050 typ.	
E	10.00	10.40	0.394	0.409
e	2.40	2.70	0.094	0.106
e1	4.95	5.15	0.195	0.203
F	1.23	1.32	0.048	0.052
H1	6.20	6.60	0.244	0.260
J1	2.40	2.72	0.094	0.107
L	13.00	14.00	0.512	0.551
L1	3.50	3.93	0.138	0.155
L20	16.40 typ.		0.646 typ.	
L30	28.90 typ.		1.138 typ.	
θP	3.75	3.85	0.148	0.152
Q	2.65	2.95	0.104	0.116

2.4 TO-220FPAB package information

- Epoxy meets UL 94,V0
- Cooling method: by conduction (C)
- Recommended torque value: 0.55 N·m
- Maximum torque value: 0.70 N·m

Figure 14. **TO-220FPAB package outline**

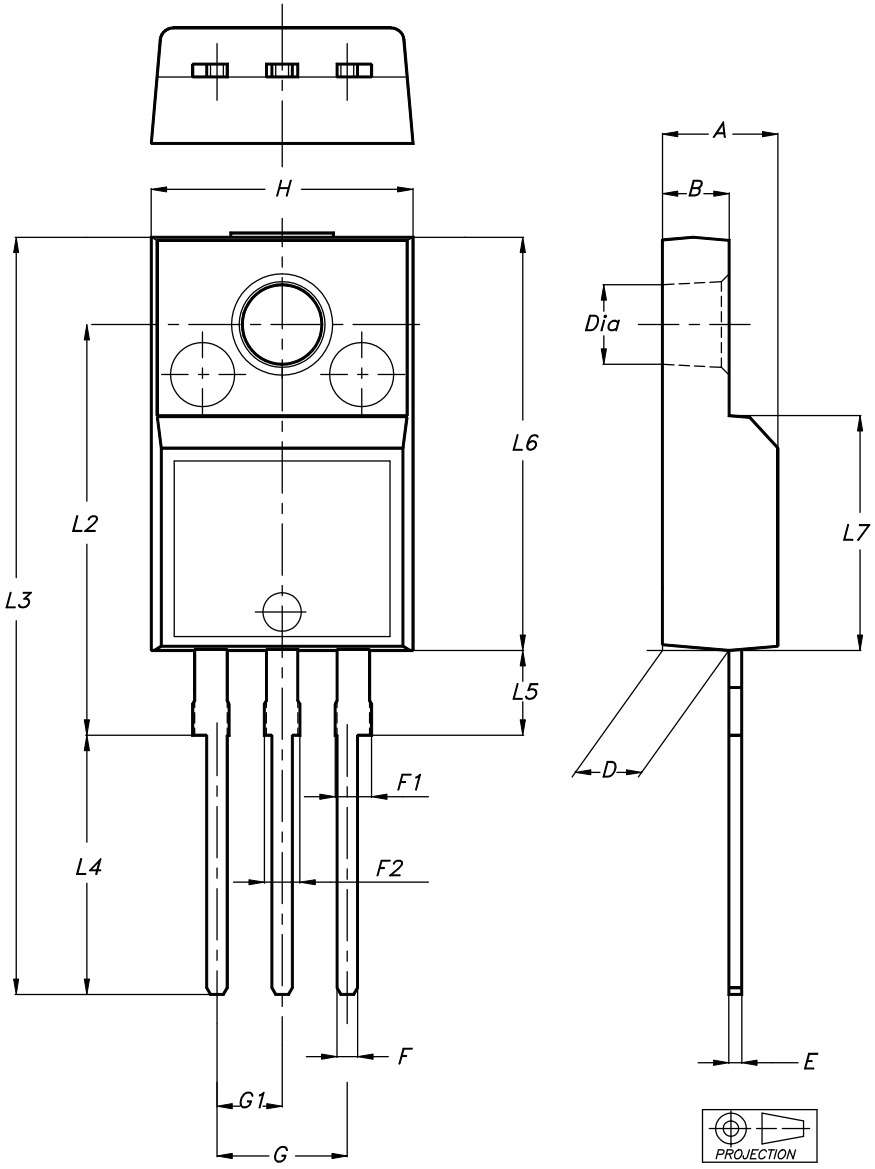

Table 7. **TO-220FPAB package mechanical data**

Ref.	Dimensions			
	Millimeters		Inches (for reference only)	
	Min.	Max.	Min.	Max.
A	4.40	4.60	0.1739	0.1818
B	2.50	2.70	0.0988	0.1067
D	2.50	2.75	0.0988	0.1087
E	0.45	0.70	0.0178	0.0277
F	0.75	1.00	0.0296	0.0395
F1	1.15	1.70	0.0455	0.0672
F2	1.15	1.70	0.0455	0.0672
G	4.95	5.20	0.1957	0.2055
G1	2.40	2.70	0.0949	0.1067
H	10.00	10.40	0.3953	0.4111
L2	16.00 typ.		0.6324 typ.	
L3	28.60	30.60	1.1304	1.2095
L4	9.80	10.60	0.3874	0.4190
L5	2.90	3.60	0.1146	0.1423
L6	15.90	16.40	0.6285	0.6482
L7	9.00	9.30	0.3557	0.3676
Dia	3.00	3.20	0.1186	0.1265

3 Ordering information

Table 8. **Ordering information**

Order code	Marking	Package	Weight	Base qty	Delivery mode
STPS20H100CT	STPS20H100CT	TO-220AB	1.95 g	50	Tube
STPS20H100CFP	STPS20H100CFP	TO-220FPAB	1.90 g	50	Tube
STPS20H100CR	STPS20H100CR	I^2PAK	1.50 g	50	Tube
STPS20H100CG	STPS20H100CG	D^2PAK	1.48 g	50	Tube
STPS20H100CG-TR	STPS20H100CG	D^2PAK	1.48 g	1000	Tape and reel

Revision history

Table 9. Document revision history

Date	Revision	Changes
Jul-2003	4G	Previous release
21-Mar-2007	5	Removed ISOWATT package
10-Sep-2007	6	Reformatted cover page to current standards - no technical changes. Updated dimensions A1, b, b1, c, c2, L, and L1 in Table 8.
22-Sep-2011	7	Updated Table 8.
21-May-2015	8	Updated features, and packages silhouette in cover page. Updated Section 1: "Characteristics" and Section 1.1: "Characteristics (curves)". Updated Section 2.2: "D²PAK package information".
16-Apr-2018	9	Updated I²PAK package mechanical data.
20-Jan-2020	10	Updated Section 1 Characteristics and Table 8. Ordering information. Added Section Applications.

IMPORTANT NOTICE – PLEASE READ CAREFULLY

STMicroelectronics NV and its subsidiaries (“ST”) reserve the right to make changes, corrections, enhancements, modifications, and improvements to ST products and/or to this document at any time without notice. Purchasers should obtain the latest relevant information on ST products before placing orders. ST products are sold pursuant to ST’s terms and conditions of sale in place at the time of order acknowledgement.

Purchasers are solely responsible for the choice, selection, and use of ST products and ST assumes no liability for application assistance or the design of Purchasers’ products.

No license, express or implied, to any intellectual property right is granted by ST herein.

Resale of ST products with provisions different from the information set forth herein shall void any warranty granted by ST for such product.

ST and the ST logo are trademarks of ST. For additional information about ST trademarks, please refer to www.st.com/trademarks. All other product or service names are the property of their respective owners.

Information in this document supersedes and replaces information previously supplied in any prior versions of this document.

© 2020 STMicroelectronics – All rights reserved