M95128-W M95128-R M95128-DF

Datasheet

128-Kbit serial SPI bus EEPROM with high-speed clock



SO8N

150 mil width

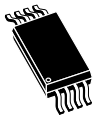

TSSOP8

169 mil width

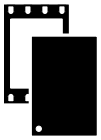

UFDFPN8 (MC)

DFN8 - 2x3 mm



WLSCP (CS)

Product status link
M95128-DF
M95128-R
M95128-W

Features

- Compatible with the serial peripheral interface (SPI) bus
- Memory array
  - 128 Kbit (16 Kbytes) of EEPROM
  - Page size: 64 bytes
  - Additional write lockable page (Identification page)
- Write time
  - Byte Write within 5 ms
  - Page Write within 5 ms
- Write protect
  - quarter array
  - half array
  - whole memory array
- High-speed clock: 20 MHz
- Single supply voltage:
  - 2.5 V to 5.5 V for M95128-W
  - 1.8 V to 5.5 V for M95128-R
  - 1.7 V to 5.5 V for M95128-DF
- Operating temperature range: from -40 °C up to +85 °C
- Enhanced ESD protection
- More than 4 million Write cycles
- More than 200-year data retention
- Packages
  - SO8 (ECOPACK2®)
  - TSSOP8 (ECOPACK2®)
  - UFDFPN8 (ECOPACK2®)
  - WLCSP (ECOPACK2®)

1 Description

The M95128 devices are electrically erasable programmable memories (EEPROMs) organized as 16384 x 8 bits, accessed through the SPI bus.

The M95128-W can operate with a supply voltage from 2.5 V to 5.5 V, the M95128-R can operate with a supply voltage from 1.8 V to 5.5 V and the M95128-DF can operate with a supply voltage from 1.7 V to 5.5 V, over an ambient temperature range of -40 °C / +85 °C.

The M95128-DF offers an additional page, named the Identification page (64 bytes). The Identification page can be used to store sensitive application parameters that can be (later) permanently locked in read-only mode.

Figure 1. Logic diagram

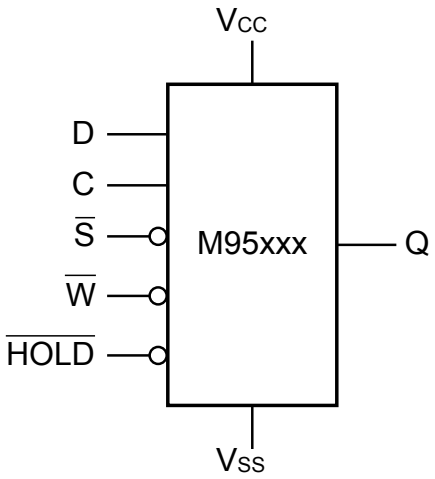

The SPI bus signals are C, D and Q, as shown in Figure 1. Logic diagram and Table 1. Signal names. The device is selected when Chip select ($\overline{S}$) is driven low. Communications with the device can be interrupted when the $\overline{HOLD}$ is driven low.

Table 1. Signal names

Signal name	Function	Direction
C	Serial clock	Input
D	Serial data input	Input
Q	Serial data output	Output
$\overline{S}$	Chip select	Input
$\overline{W}$	Write protect	Input
$\overline{HOLD}$	Hold	Input
V_{CC}	Supply voltage	-
V_{SS}	Ground	-

Figure 2. 8-pin package connections (top view)

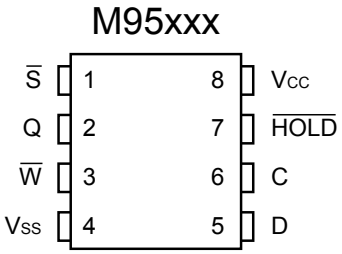

1. See Section 10 Package information for package dimensions, and how to identify pin 1.

Figure 3. WLCSP connections (top view, marking side, with bumps on the underside)

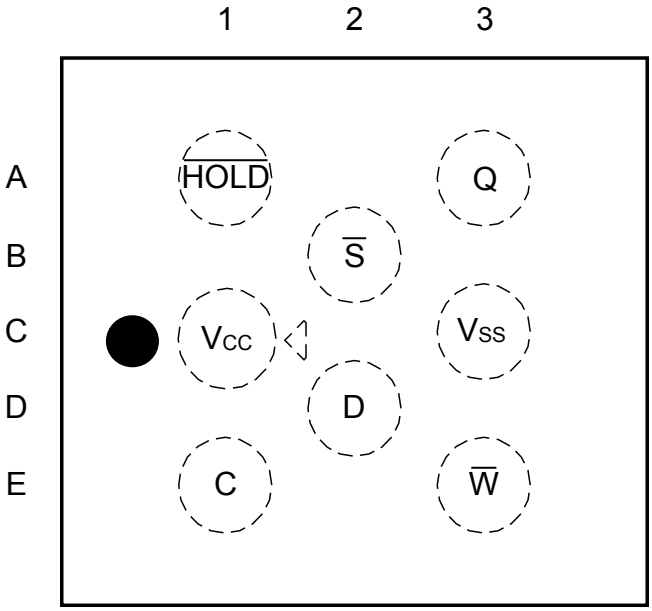

Table 2. Signals vs. bump position

Position	A	B	C	D	E
1	$\overline{HOLD}$	-	V_{CC}	-	C
2	-	$\overline{S}$	-	D	-
3	Q	-	V_{SS}	-	$\overline{W}$

2 Memory organization

The memory is organized as shown in the following figure.

Figure 4. Block diagram

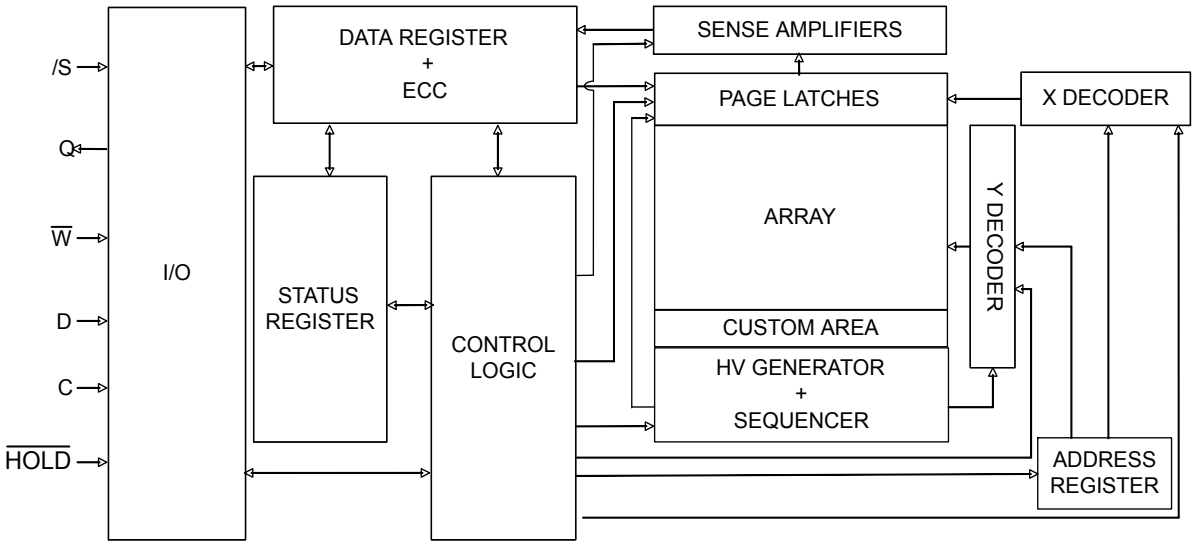

3 Signal description

During all operations, V_{CC} must be held stable and within the specified valid range: V_{CC}(min) to V_{CC}(max).

All of the input and output signals must be held high or low (according to voltages of V_{IH}, V_{OH}, V_{IL} or V_{OL}, as specified in Section 9 DC and AC parameters). These signals are described next.

3.1 Serial data output (Q)

This output signal is used to transfer data serially out of the device. Data is shifted out on the falling edge of Serial clock (C).

3.2 Serial data input (D)

This input signal is used to transfer data serially into the device. It receives instructions, addresses, and the data to be written. Values are latched on the rising edge of Serial clock (C).

3.3 Serial clock (C)

This input signal provides the timing of the serial interface. Instructions, addresses, or data present at Serial data input (D) are latched on the rising edge of Serial clock (C). Data on Serial data output (Q) change from the falling edge of Serial clock (C).

3.4 Chip select ($\overline{S}$)

When this input signal is high, the device is deselected and Serial data output (Q) is at high impedance. The device is in the Standby power mode, unless an internal Write cycle is in progress. Driving Chip select ($\overline{S}$) low selects the device, placing it in the Active power mode.

After power-up, a falling edge on Chip select ($\overline{S}$) is required prior to the start of any instruction.

3.5 Hold ($\overline{HOLD}$)

The Hold ($\overline{HOLD}$) signal is used to pause any serial communications with the device without deselecting the device.

During the Hold condition, the Serial data output (Q) is high impedance, and Serial data input (D) and Serial clock (C) are Don't care.

To start the Hold condition, the device must be selected, with Chip select ($\overline{S}$) driven low.

3.6 Write protect ($\overline{W}$)

The main purpose of this input signal is to freeze the size of the area of memory that is protected against Write instructions (as specified by the values in the BP1 and BP0 bits of the Status register).

This pin must be driven either high or low, and must be stable during all Write instructions.

3.7 V_{CC} supply voltage

V_{CC} is the supply voltage.

3.8 V_{SS} ground

V_{SS} is the reference for all signals, including the V_{CC} supply voltage.

4 Connecting to the SPI bus

All instructions, addresses and input data bytes are shifted in to the device, most significant bit first. The Serial data input (D) is sampled on the first rising edge of the Serial clock (C) after Chip select ($\overline{S}$) goes low.

All output data bytes are shifted out of the device, most significant bit first. The Serial data output (Q) is latched on the first falling edge of the Serial clock (C) after the instruction (such as the Read from Memory array and Read Status register instructions) have been clocked into the device.

Figure 5. Bus master and memory devices on the SPI bus

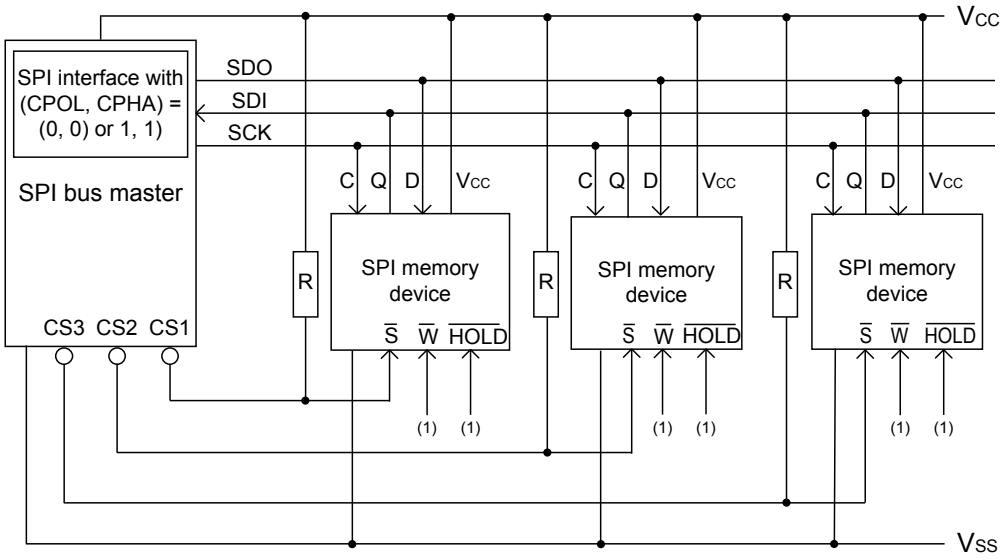

1. The Write protect ($\overline{W}$) and Hold ($\overline{HOLD}$) signals should be driven, high or low as appropriate.

Figure 5. Bus master and memory devices on the SPI bus shows an example of three memory devices connected to an SPI bus master. Only one memory device is selected at a given time, so only one memory device drives the Serial data output (Q) line at that time. The other memory devices are in high impedance state. The pull-up resistor R ensures that a device is not selected if the Bus master leaves the $\overline{S}$ line in the high impedance state.

In applications where the bus master can enter a state where the whole input/output SPI bus is high-impedance at a given time (for example, if the bus master is reset during the transmission of an instruction), it is advised to connect the clock line (C) to an external pull-down resistor so that, if all inputs/outputs become high-impedance, the C line is pulled low (while the $\overline{S}$ line is pulled high). This ensures that $\overline{S}$ and C do not become high at the same time, and so, that the t_{SHCH} requirement is met. The typical value of R is 100 kΩ.

4.1 SPI modes

These devices can be driven by a microcontroller with its SPI peripheral running in either of the following two modes:

- CPOL = 0, CPHA = 0
- CPOL = 1, CPHA = 1

For these two modes, input data is latched in on the rising edge of Serial clock (C), and output data is available from the falling edge of Serial clock (C).

The difference between the two modes, as shown in Figure 6. SPI modes supported, is the clock polarity when the bus master is in Stand-by mode and not transferring data:

- C remains at 0 for (CPOL = 0, CPHA = 0)
- C remains at 1 for (CPOL = 1, CPHA = 1)

Figure 6. SPI modes supported

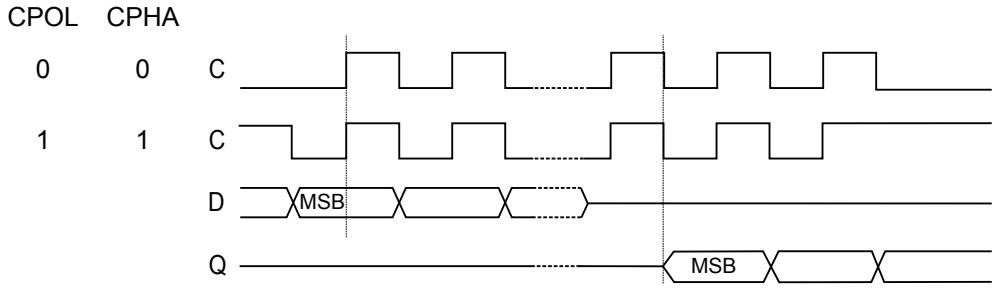

5 Operating features

5.1 Supply voltage (V_{CC})

5.1.1 Operating supply voltage (V_{CC})

Prior to selecting the memory and issuing instructions to it, a valid and stable V_{CC} voltage within the specified [V_{CC}(min), V_{CC}(max)] range must be applied (see Operating conditions in Section 9 DC and AC parameters). This voltage must remain stable and valid until the end of the transmission of the instruction and, for a Write instruction, until the completion of the internal write cycle (t_W). In order to secure a stable DC supply voltage, it is recommended to decouple the V_{CC} line with a suitable capacitor (usually in the range between 10 and 100 nF) close to the V_{CC} / V_{SS} device pins.

5.1.2 Device reset

In order to prevent erroneous instruction decoding and inadvertent Write operations during power-up, a power-on-reset (POR) circuit is included. At power-up, the device does not respond to any instruction until VCC reaches the POR threshold voltage. This threshold is lower than the minimum V_{CC} operating voltage (see Operating conditions in Section 9 DC and AC parameters).

At power-up, when V_{CC} passes over the POR threshold, the device is reset and is in the following state:

- in Standby power mode,
- deselected,
- Status register values:
  - the Write enable latch (WEL) bit is reset to 0
  - the Write in progress (WIP) bit is reset to 0
  - the SRWD, BP1 and BP0 bits remain unchanged (non-volatile bits).

It is important to note that the device must not be accessed until V_{CC} reaches a valid and stable level within the specified [V_{CC}(min), V_{CC}(max)] range, as defined under Operating conditions in Section 9 DC and AC parameters.

5.1.3 Power-up conditions

When the power supply is turned on, V_{CC} rises continuously from V_{SS} to V_{CC}. During this time, the Chip select ($\overline{S}$) line is not allowed to float but should follow the V_{CC} voltage. It is therefore recommended to connect the $\overline{S}$ line to V_{CC} via a suitable pull-up resistor (see Figure 5. Bus master and memory devices on the SPI bus).

In addition, the Chip select ($\overline{S}$) input offers a built-in safety feature, as the $\overline{S}$ input is

edge-sensitive as well as level-sensitive: after power-up, the device does not become selected until a falling edge has first been detected on Chip select ($\overline{S}$). This ensures that Chip select ($\overline{S}$) must have been high, prior to going low to start the first operation.

The V_{CC} voltage has to rise continuously from 0 V up to the minimum V_{CC} operating voltage defined in Section 9 DC and AC parameters.

5.1.4 Power-down

During power-down (continuous decrease of the V_{CC} supply voltage below the minimum V_{CC} operating voltage defined in Section 9 DC and AC parameters), the device must be:

- deselected (Chip select $\overline{S}$ must be allowed to follow the voltage applied on V_{CC})
- in Standby power mode (there must not be any internal write cycle in progress).

5.2 Active power and Standby power modes

When Chip select ($\overline{S}$) is low, the device is selected, and in the Active power mode. The device consumes I_{CC}.

When Chip select ($\overline{S}$) is high, the device is deselected. If a Write cycle is not currently in progress, the device then goes into the Standby power mode, and the device consumption drops to I_{CC1}, as specified in DC characteristics (see Section 9 DC and AC parameters).

5.3 Hold condition

The Hold ($\overline{\text{HOLD}}$) signal is used to pause any serial communications with the device without resetting the clocking sequence.

To enter the Hold condition, the device must be selected, with Chip select ($\overline{\text{S}}$) low.

During the Hold condition, the Serial data output (Q) is high impedance, and the Serial data input (D) and the Serial clock (C) are Don't care.

Normally, the device is kept selected for the whole duration of the Hold condition. Deselecting the device while it is in the Hold condition has the effect of resetting the state of the device: this mechanism can be used, if required, to reset the ongoing processes.

Note: This resets the internal logic, except the WEL and WIP bits of the Status register.

In the specific case where the device has moved in a Write command (Inst + Address + data bytes, each data byte being exactly 8 bits), deselecting the device also triggers the Write cycle of this decoded command.

Figure 7. Hold condition activation

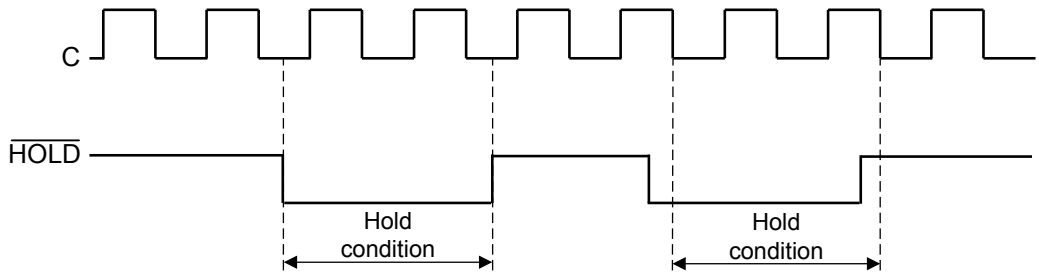

The Hold condition starts when the Hold ($\overline{\text{HOLD}}$) signal is driven low when Serial clock (C) is already low (as shown in Figure 7. Hold condition activation).

Figure 7. Hold condition activation also shows what happens if the rising and falling edges are not timed to coincide with Serial clock (C) being low.

5.4 Status register

The Status register contains a number of status and control bits that can be read or set (as appropriate) by specific instructions. See Section 6.3 Read Status register (RDSR) for a detailed description of the Status register bits.

5.5 Data protection and protocol control

The device features the following data protection mechanisms:

- Before accepting the execution of the Write and Write Status register instructions, the device checks whether the number of clock pulses comprised in the instructions is a multiple of eight.
- All instructions that modify data must be preceded by a Write enable (WREN) instruction to set the Write enable latch (WEL) bit.
- The Block protect (BP1, BP0) bits in the Status register are used to configure part of the memory as read-only.
- The Write protect ($\overline{W}$) signal is used to protect the Block protect (BP1, BP0) bits in the Status register.

For any instruction to be accepted, and executed, Chip select ($\overline{S}$) must be driven high after the rising edge of Serial clock (C) for the last bit of the instruction, and before the next rising edge of Serial clock (C).

Two points to note in the previous sentence:

- The “last bit of the instruction” can be the eighth bit of the instruction code, or the eighth bit of a data byte, depending on the instruction (except for Read Status register (RDSR) and Read (READ) instructions).
- The “next rising edge of Serial clock (C)” might (or might not) be the next bus transaction for some other device on the SPI bus.

Table 3. Write-protected block size

Status register bits		Protected block	Protected array addresses
BP1	BP0		
0	0	None	None
0	1	Upper quarter	3000h - 3FFFh
1	0	Upper half	2000h - 3FFFh
1	1	Whole memory	0000h - 3FFFh plus Identification Page

6 Instructions

Each command is composed of bytes (MSBit transmitted first), initiated with the instruction byte, as summarized in Table 4.

If an invalid instruction is sent (one not contained in Table 4), the device automatically enters in a Wait state until deselected.

Table 4. Instruction set

Instruction	Description	Instruction format
WREN	Write enable	0000 0110
WRDI	Write disable	0000 0100
RDSR	Read Status register	0000 0101
WRSR	Write Status register	0000 0001
READ	Read from Memory array	0000 0011
WRITE	Write to Memory array	0000 0010
RDID (1)	Read Identification page	1000 0011
WRID(1)	Write Identification page	1000 0010
RDLS(1)	Reads the Identification page lock status	1000 0011
LID(1)	Locks the Identification page in read-only mode	1000 0010

1. *Instruction available only for the M95128-D device.*

For read and write commands to memory array and Identification page the address is defined by two bytes as explained in Table 5.

Table 5. Significant bits within the address bytes

Instruction	MSB address byte								LSB address byte							
	b15	b14	b13	b12	b11	b10	b9	b8	b7	b6	b5	b4	b3	b2	b1	b0
READ or WRITE	x	x	A13	A12	A11	A10	A9	A8	A7	A6	A5	A4	A3	A2	A1	A0
RDID or WRID	0	0	0	0	0	0	0	0	0	0	A5	A4	A3	A2	A1	A0
RDLS or LID	0	0	0	0	0	1	0	0	0	0	0	0	0	0	0	0

Note: A: Significant address bit.
x: bit is Don't care.

6.1 Write enable (WREN)

The Write enable latch (WEL) bit must be set prior to each WRITE and WRSR instruction. The only way to do this is to send a Write enable instruction to the device.

As shown in Figure 8. Write enable (WREN) sequence, to send this instruction to the device, Chip select ($\overline{S}$) is driven low, and the bits of the instruction byte are shifted in, on Serial data input (D). The device then enters a wait state. It waits for the device to be deselected by Chip select ($\overline{S}$) being driven high.

Figure 8. Write enable (WREN) sequence

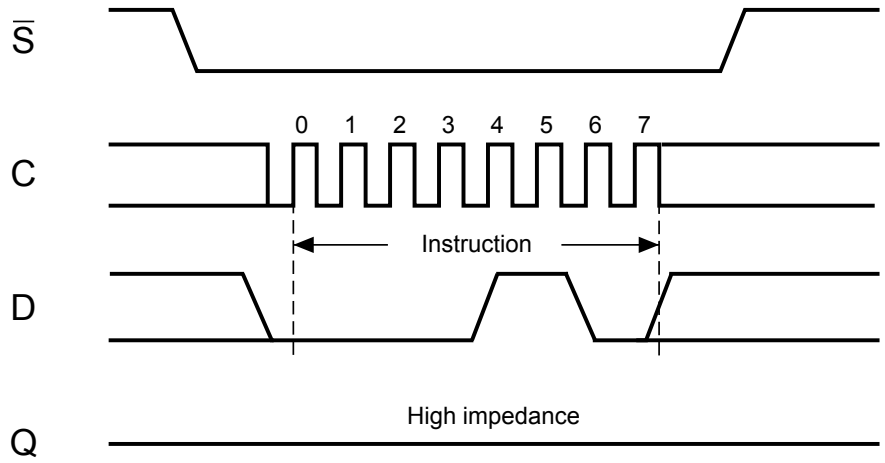

6.2 Write disable (WRDI)

One way of resetting the Write enable latch (WEL) bit is to send a Write disable instruction to the device.

As shown in Figure 9, to send this instruction to the device, Chip select ($\overline{S}$) is driven low, and the bits of the instruction byte are shifted in, on Serial data input (D).

The device then enters a wait state. It waits for a the device to be deselected, by Chip select ($\overline{S}$) being driven high.

The Write enable latch (WEL) bit, in fact, becomes reset by any of the following events:

- Power-up
- WRDI instruction execution
- WRSR instruction completion
- WRITE instruction completion.

Figure 9. Write disable (WRDI) sequence

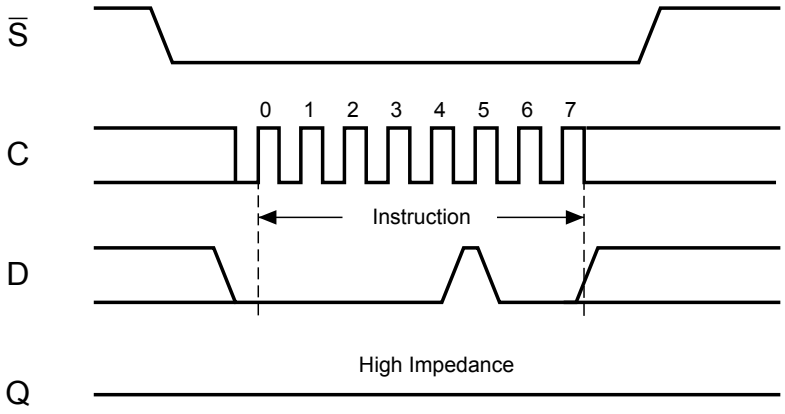

6.3 Read Status register (RDSR)

The Read Status register (RDSR) instruction is used to read the Status register. The Status register may be read at any time, even while a Write or Write Status register cycle is in progress. When one of these cycles is in progress, it is recommended to check the Write in progress (WIP) bit before sending a new instruction to the device. It is also possible to read the Status register continuously, as shown in Figure 10. Read Status register (RDSR) sequence.

Figure 10. Read Status register (RDSR) sequence

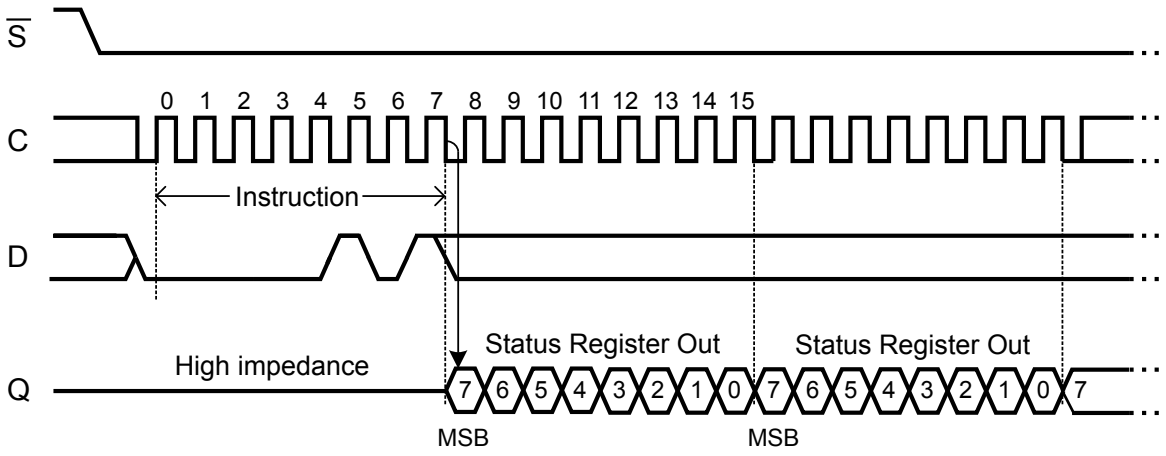

The status and control bits of the Status register are detailed in the following subsections.

6.3.1 WIP bit

The Write in progress (WIP) bit indicates whether the memory is busy with a Write or Write Status Register cycle. When set to 1, such a cycle is in progress, when reset to 0, no such cycle is in progress.

6.3.2 WEL bit

The Write enable latch (WEL) bit indicates the status of the internal Write enable latch. When set to 1, the internal Write enable latch is set. When set to 0, the internal Write enable latch is reset, and no Write or Write Status Register instruction is accepted.

The WEL bit is returned to its reset state by the following events:

- Power-up
- Write Disable (WRDI) instruction completion
- Write Status Register (WRSR) instruction completion
- Write (WRITE) instruction completion

6.3.3 BP1, BP0 bits

The Block protect (BP1, BP0) bits are non volatile. They define the size of the area to be software-protected against Write instructions. These bits are written with the Write Status register (WRSR) instruction. When one or both of the Block protect (BP1, BP0) bits is set to 1, the relevant memory area (as defined in Table 3. Write-protected block size) becomes protected against Write (WRITE) instructions. The Block protect (BP1, BP0) bits can be written provided that the Hardware Protected mode has not been set.

6.3.4 SRWD bit

The Status register Write Disable (SRWD) bit is operated in conjunction with the Write protect ($\overline{W}$) signal. The Status register Write Disable (SRWD) bit and Write protect ($\overline{W}$) signal enable the device to be put in the Hardware Protected mode (when the Status register Write Disable (SRWD) bit is set to 1, and Write protect ($\overline{W}$) is driven low). In this mode, the non-volatile bits of the Status register (SRWD, BP1, BP0) become read-only bits and the Write Status register (WRSR) instruction is no longer accepted for execution.

Table 6. Status register format

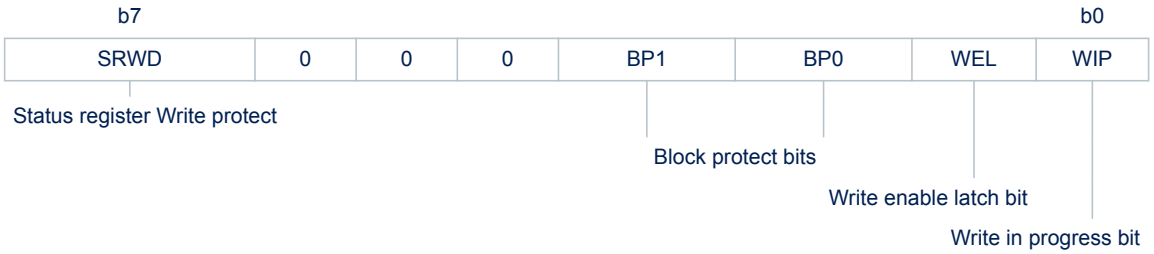

6.4 Write Status register (WRSR)

The Write Status register (WRSR) instruction is used to write new values to the Status register. Before it can be accepted, a Write enable (WREN) instruction must have been previously executed.

The Write Status register (WRSR) instruction is entered by driving Chip select ($\overline{S}$) low, followed by the instruction code, the data byte on Serial Data input (D) and Chip select ($\overline{S}$) driven high. Chip select ($\overline{S}$) must be driven high after the rising edge of Serial clock (C) that latches in the eighth bit of the data byte, and before the next rising edge of Serial clock (C). Otherwise, the Write Status register (WRSR) instruction is not executed.

The instruction sequence is shown in Figure 11 below.

Figure 11. Write Status register (WRSR) sequence

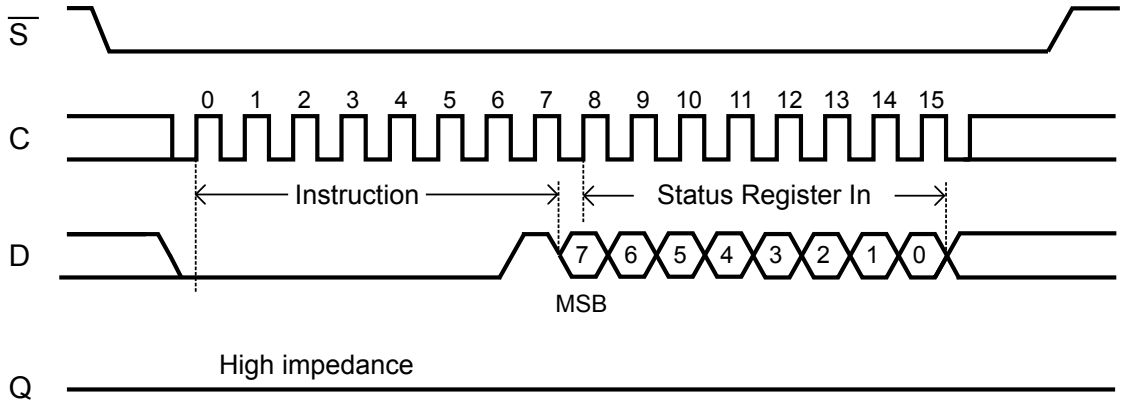

Driving the Chip select ($\overline{S}$) signal high at a byte boundary of the input data triggers the self-timed Write cycle that takes t_W to complete (as specified in AC tables in Section 9 DC and AC parameters).

While the Write Status register cycle is in progress, the Status register may still be read to check the value of the Write in progress (WIP) bit: the WIP bit is 1 during the self-timed Write cycle t_W, and 0 when the Write cycle is complete. The WEL bit (Write enable latch) is also reset at the end of the Write cycle t_W.

The Write Status register (WRSR) instruction enables the user to change the values of the BP1, BP0 and SRWD bits:

- The Block protect (BP1, BP0) bits define the size of the area that is to be treated as read-only, as defined in Table 3. Write-protected block size.
- The SRWD (Status register Write Disable) bit, in accordance with the signal read on the Write protect pin ($\overline{W}$), enables the user to set or reset the Write protection mode of the Status register itself, as defined in Table 7. Protection modes. When in Write-protected mode, the Write Status register (WRSR) instruction is not executed.

The contents of the SRWD and BP1, BP0 bits are updated after the completion of the WRSR instruction, including the t_W Write cycle.

The Write Status register (WRSR) instruction has no effect on the b6, b5, b4, b1, b0 bits in the Status register. Bits b6, b5, b4 are always read as 0.

Table 7. Protection modes

$\overline{W}$ signal	SRWD bit	Mode	Write protection of the Status register	Memory content	
				Protected area (1)	Unprotected area(1)
1	0	Software-protected (SPM)	Status register is writable (if the WREN instruction has set the WEL bit). The values in the BP1 and BP0 bits can be changed.	Write-protected	Ready to accept Write instructions
0	0				
1	1				
0	1	Hardware-protected (HPM)	Status register is Hardware write-protected. The values in the BP1 and BP0 bits cannot be changed.	Write-protected	Ready to accept Write instructions

1. *As defined by the values in the Block protect (BP1, BP0) bits of the Status register. See Table 3. Write-protected block size.*

The protection features of the device are summarized in Table 7.

When the Status register Write Disable (SRWD) bit in the Status register is 0 (its initial delivery state), it is possible to write to the Status register (provided that the WEL bit has previously been set by a WREN instruction), regardless of the logic level applied on the Write protect ($\overline{W}$) input pin.

When the Status register Write Disable (SRWD) bit in the Status register is set to 1, two cases should be considered, depending on the state of the Write protect ($\overline{W}$) input pin:

- If Write protect ($\overline{W}$) is driven high, it is possible to write to the Status register (provided that the WEL bit has previously been set by a WREN instruction).
- If Write protect ($\overline{W}$) is driven low, it is not possible to write to the Status register even if the WEL bit has previously been set by a WREN instruction. (Attempts to write to the Status register are rejected, and are not accepted for execution). As a consequence, all the data bytes in the memory area, which are Software-protected (SPM) by the Block protect (BP1, BP0) bits in the Status register, are also hardware-protected against data modification.

Regardless of the order of the two events, the Hardware-protected mode (HPM) can be entered by:

- either setting the SRWD bit after driving the Write protect ($\overline{W}$) input pin low,
- or driving the Write protect ($\overline{W}$) input pin low after setting the SRWD bit.

Once the Hardware-protected mode (HPM) has been entered, the only way of exiting it is to pull high the Write protect ($\overline{W}$) input pin.

If the Write protect ($\overline{W}$) input pin is permanently tied high, the Hardware-protected mode (HPM) can never be activated, and only the Software-protected mode (SPM), using the Block protect (BP1, BP0) bits in the Status register, can be used.

6.5 Read from Memory array (READ)

As shown in Figure 12, to send this instruction to the device, Chip select ($\overline{S}$) is first driven low. The bits of the instruction byte and address bytes are then shifted in, on Serial data input (D). The address is loaded into an internal address register, and the byte of data at that address is shifted out, on Serial data output (Q).

Figure 12. Read from Memory array (READ) sequence

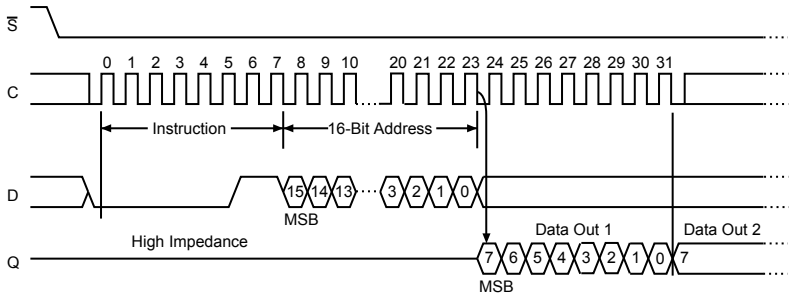

Note: Depending on the memory size, as shown in Table 5. Significant bits within the address bytes, the most significant address bits are Don't care.

If Chip select ($\overline{S}$) continues to be driven low, the internal address register is incremented automatically, and the byte of data at the new address is shifted out.

When the highest address is reached, the address counter rolls over to zero, allowing the Read cycle to be continued indefinitely. The whole memory can, therefore, be read with a single READ instruction.

The Read cycle is terminated by driving Chip select ($\overline{S}$) high. The rising edge of the Chip select ($\overline{S}$) signal can occur at any time during the cycle.

The instruction is not accepted, and is not executed, if a Write cycle is currently in progress.

6.6 Write to Memory array (WRITE)

As shown in Figure 13, to send this instruction to the device, Chip select ($\overline{S}$) is first driven low. The bits of the instruction byte, address byte, and at least one data byte are then shifted in, on Serial data input (D).

The instruction is terminated by driving Chip select ($\overline{S}$) high at a byte boundary of the input data. The self-timed Write cycle, triggered by the Chip select ($\overline{S}$) rising edge, continues for a period t_W (as specified in AC characteristics in Section 9 DC and AC parameters), at the end of which the Write in Progress (WIP) bit is reset to 0.

Figure 13. Byte Write (WRITE) sequence

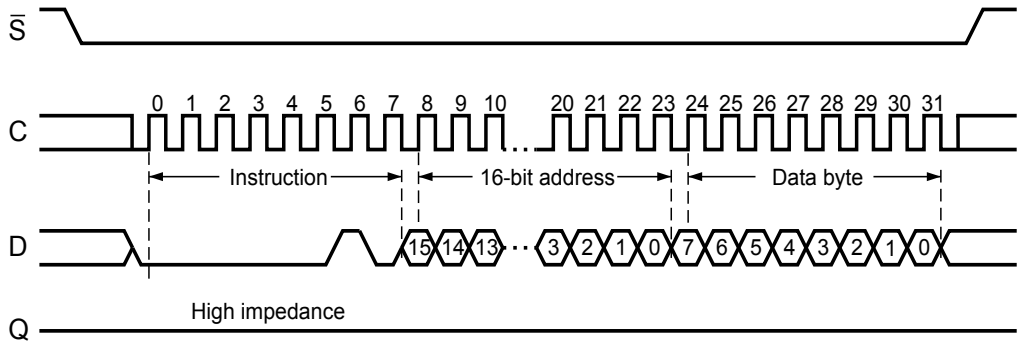

Note: Depending on the memory size, as shown in Table 5. Significant bits within the address bytes, the most significant address bits are Don't care.

In the case of Figure 13, Chip select ($\overline{S}$) is driven high after the eighth bit of the data byte has been latched in, indicating that the instruction is being used to write a single byte. However, if Chip select ($\overline{S}$) continues to be driven low (as shown in Figure 14), the next byte of input data is shifted in, so that more than a single byte, starting from the given address towards the end of the same page, can be written in a single internal Write cycle.

Each time a new data byte is shifted in, the least significant bits of the internal address counter are incremented. If more bytes are sent than will fit up to the end of the page, a condition known as "roll-over" occurs. In case of roll-over, the bytes exceeding the page size are overwritten from location 0 of the same page.

The instruction is not accepted, and is not executed, under the following conditions:

- if the Write enable latch (WEL) bit has not been set to 1 (by executing a Write enable instruction just before),
- if a Write cycle is already in progress,
- if the device has not been deselected, by driving high Chip select ($\overline{S}$), at a byte boundary (after the eighth bit, b0, of the last data byte that has been latched in),
- if the addressed page is in the region protected by the Block protect (BP1 and BP0) bits.

Note: The self-timed write cycle t_W is internally executed as a sequence of two consecutive events: [Erase addressed byte(s)], followed by [Program addressed byte(s)]. An erased bit is read as "0" and a programmed bit is read as "1".

Figure 14. Page Write (WRITE) sequence

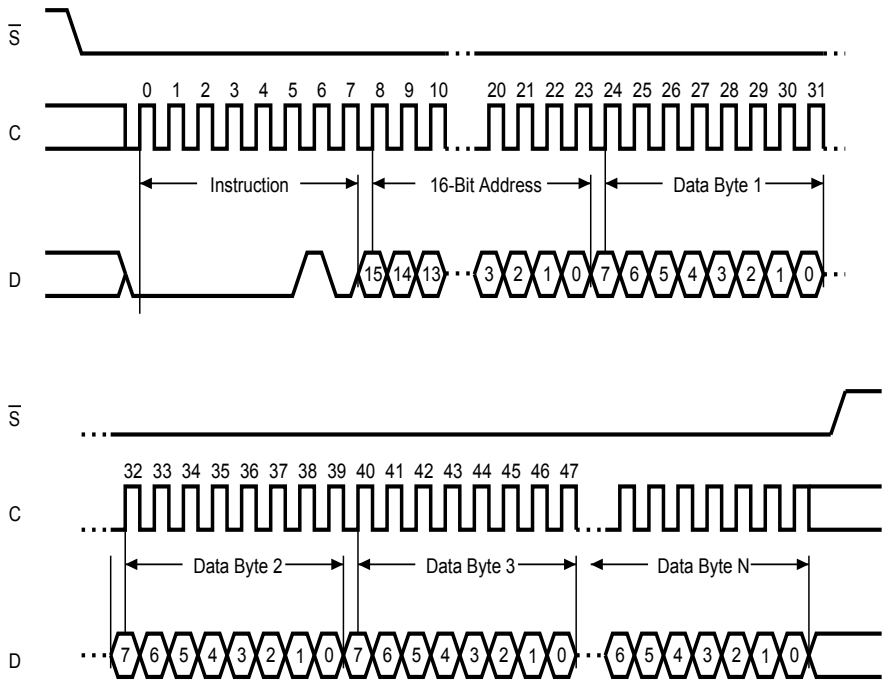

1. Depending on the memory size, as shown in Table 5. Significant bits within the address bytes, the most significant address bits are Don't care.

6.6.1 Cycling with error correction code (ECC x4)

M95128 devices offer an error correction code (ECC) logic. The ECC is an internal logic function transparent for the SPI communication protocol.

The ECC logic is implemented on each group of four EEPROM bytes (A group of four bytes is located at addresses [4*N, 4*N+1, 4*N+2, 4*N+3], where N is an integer.). Inside a group, if a single bit out of the four bytes happens to be erroneous during a Read operation, the ECC detects this bit and replaces it with the correct value. The read reliability is therefore much improved.

Even if the ECC function is performed on groups of four bytes, a single byte can be written/cycled independently. In this case, the ECC function also writes/cycles the three other bytes located in the same group. As a consequence, the maximum cycling budget is defined at group level and the cycling can be distributed over the four bytes of the group: the sum of the cycles seen by byte0, byte1, byte2 and byte3 of the same group must remain below the maximum value defined in Table 13. Cycling performance by groups of four bytes.

6.7 Read Identification page (available only in M95128-D devices)

The Identification page (64 bytes) is an additional page that can be written and (later) permanently locked in Read-only mode.

This page is read with the Read Identification page instruction (see Table 4. Instruction set). The Chip select signal ($\overline{S}$) is first driven low, the bits of the instruction byte and address bytes are then shifted in, on Serial data input (D). Address bit A10 must be 0, upper address bits are Don't care, and the data byte pointed to by the lower address bits [A5:A0] is shifted out on Serial data output (Q). If Chip select ($\overline{S}$) continues to be low, the internal address register is automatically incremented, and the byte of data at the new address is shifted out.

The number of bytes to read in the ID page must not exceed the page boundary, otherwise unexpected data are read (e.g. when reading the ID page from location 24d, the number of bytes must be lower than or equal to 40d, as the ID page boundary is 64 bytes).

The read cycle is terminated by driving Chip select ($\overline{S}$) high. The rising edge of the Chip select ($\overline{S}$) signal can occur at any time during the cycle. The first byte addressed can be any byte within any page.

The instruction is not accepted, and is not executed, if a write cycle is currently in progress.

Figure 15. Read Identification page sequence

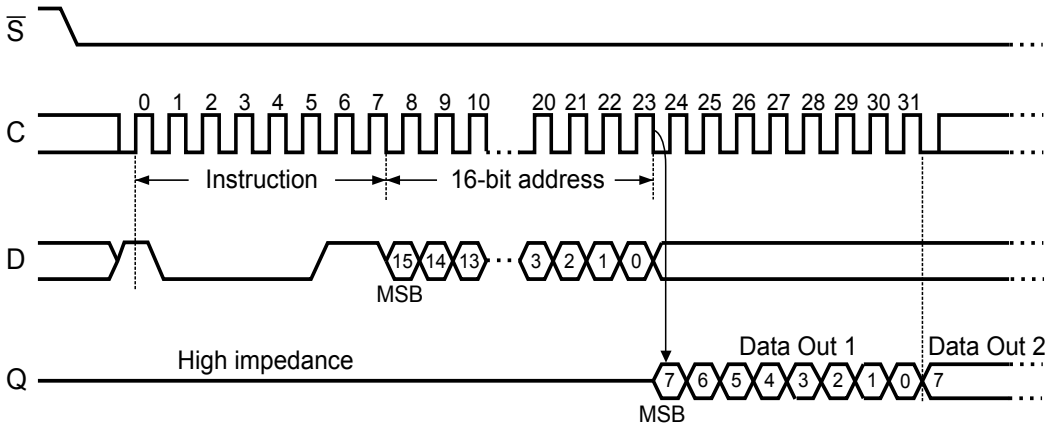

6.8 Write Identification page (available only in M95128-D devices)

The Identification page (64 bytes) is an additional page that can be written and (later) permanently locked in Read-only mode.

Writing this page is achieved with the Write Identification page instruction (see Table 4. Instruction set). The Chip select signal ($\overline{S}$) is first driven low. The bits of the instruction byte, address bytes, and at least one data byte are then shifted in on Serial data input (D). Address bit A10 must be 0, upper address bits are Don't care, the lower address bits [A5:A0] define the byte address within the Identification page. The instruction sequence is shown in Figure 16. Write Identification page sequence.

Figure 16. Write Identification page sequence

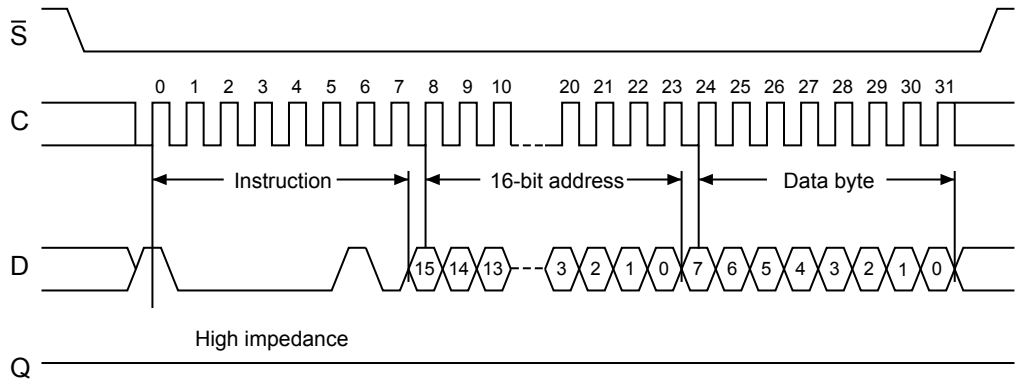

6.9 Read Lock status (available only in M95128-D devices)

The Read Lock status instruction (see Table 4. Instruction set) is used to check whether the Identification page is locked or not in Read-only mode. The Read Lock status sequence is defined with the Chip select ($\overline{S}$) first driven low. The bits of the instruction byte and address bytes are then shifted in on Serial data input (D). Address bit A10 must be 1, all other address bits are Don't Care. The Lock bit is the LSB (least significant bit) of the byte read on Serial data output (Q). It is at “1” when the lock is active and at “0” when the lock is not active. If Chip select ($\overline{S}$) continues to be driven low, the same data byte is shifted out. The read cycle is terminated by driving Chip select ($\overline{S}$) high.

The instruction sequence is shown in Figure 17. Read Lock status sequence.

Figure 17. Read Lock status sequence

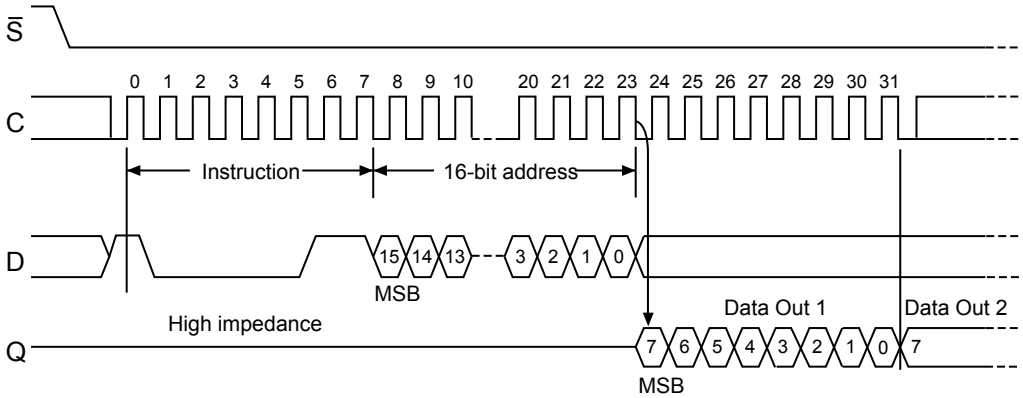

6.10 Lock ID (available only in M95128-D devices)

The Lock ID instruction permanently locks the Identification page in read-only mode. Before this instruction can be accepted, a Write enable (WREN) instruction must have been executed.

The Lock ID instruction is issued by driving Chip select ($\overline{S}$) low, sending the instruction code, the address and a data byte on Serial data input (D), and driving Chip select ($\overline{S}$) high. In the address sent, A10 must be equal to 1, all other address bits are Don't Care. The data byte sent must be equal to the binary value xxxx xx1x, where x = Don't Care.

Chip select ($\overline{S}$) must be driven high after the rising edge of Serial clock (C) that latches in the eighth bit of the data byte, and before the next rising edge of Serial clock (C). Otherwise, the Lock ID instruction is not executed.

Driving Chip select ($\overline{S}$) high at a byte boundary of the input data triggers the self-timed write cycle whose duration is t_W (as specified in AC characteristics in Section 9 DC and AC parameters). The instruction sequence is shown in Figure 18. Lock ID sequence.

The instruction is discarded, and is not executed, under the following conditions:

- If a Write cycle is already in progress
- If Block protect bits (BP1,BP0) = (1,1)
- If a rising edge on Chip select ($\overline{S}$) happens outside of a byte boundary.
- If the Write enable latch (WEL) bit has not been set to 1 (by executing a Write enable instruction just before)

Figure 18. Lock ID sequence

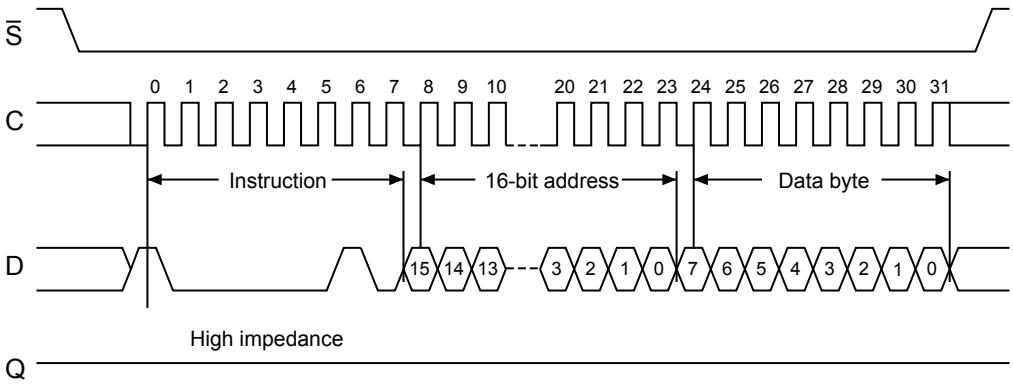

7 Power-up and delivery state

7.1 Power-up state

After power-up, the device is in the following state:

- Standby power mode
- deselected (after power-up, a falling edge is required on Chip select ($\overline{S}$) before any instructions can be started)
- not in the Hold condition
- the Write enable latch (WEL) is reset to 0
- Write in progress (WIP) is reset to 0.

The SRWD, BP1 and BP0 bits of the Status register are unchanged from the previous power-down (they are non-volatile bits).

7.2 Initial delivery state

The device is delivered with the memory array and Identification page bits set to all 1s (each byte = FFh). The Status register Write Disable (SRWD) and Block protect (BP1 and BP0) bits are initialized to 0.

8 Maximum ratings

Stressing the device outside the ratings listed in Table 8 may cause permanent damage to the device. These are stress ratings only, and operation of the device at these, or any other conditions outside those indicated in the operating sections of this specification, is not implied. Exposure to absolute maximum rating conditions for extended periods may affect device reliability.

Table 8. Absolute maximum ratings

Symbol	Parameter	Min.	Max.	Unit
T_{AMB}	Ambient operating temperature	–40	130	°C
T_{STG}	Storage temperature	–65	150	
T_{LEAD}	Lead temperature during soldering	See note (1)		
V_O	Output voltage	–0.50	V_{CC} + 0.6	V
V_I	Input voltage	–0.50	6.5	
V_{CC}	Supply voltage	–0.50	6.5	
I_{OL}	DC output current (Q = 0)	-	5	mA
I_{OH}	DC output current (Q = 1)	-	5	
V_{ESD}	Electrostatic discharge voltage (human body model) (2)	-	4000	V

1. *Compliant with JEDEC standard J-STD-020E (for small-body, Sn-Pb or Pb free assembly), the ST ECOPACK 7191395 specification, and the European directive on Restrictions on Hazardous Substances (RoHS directive 2011/65/EU of July 2011).*
2. *Positive and negative pulses applied on different combinations of pin connections, according to AEC-Q100-002 (compliant with ANSI/ESDA/JEDEC JS-001-2012, C1 = 100 pF, R1 = 1500 Ω, R2 = 500 Ω).*

9 DC and AC parameters

This section summarizes the operating conditions and the DC/AC characteristics.

Table 9. Operating conditions (M95128-W, device grade 6)

Symbol	Parameter	Min.	Max.	Unit
V_{CC}	Supply voltage	2.5	5.5	V
T_A	Ambient operating temperature	–40	85	°C

Table 10. Operating conditions (M95128-R, device grade 6)

Symbol	Parameter	Min.	Max.	Unit
V_{CC}	Supply voltage	1.8	5.5	V
T_A	Ambient operating temperature	-40	85	°C

Table 11. Operating conditions (M95128-DF, device grade 6)

Symbol	Parameter	Min.	Max.	Unit
V_{CC}	Supply voltage	1.7	5.5	V
T_A	Ambient operating temperature	–40	85	°C

Table 12. AC measurement conditions

Symbol	Parameter	Min.	Max.	Unit
C_L	Load capacitance	-	100	pF
-	Input rise and fall times	-	50	ns
-	Input pulse voltages	0.2 V_{CC} to 0.8 V_{CC}		V
-	Input and output timing references voltages	0.3 V_{CC} to 0.7 V_{CC}		V

Figure 19. AC measurement I/O waveform

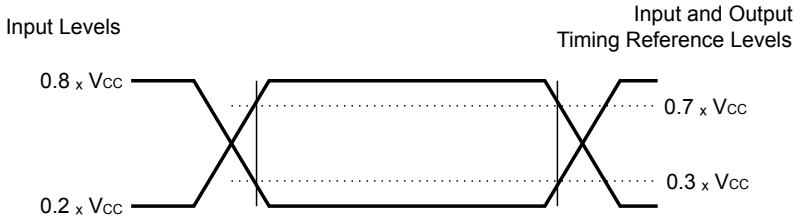

Table 13. Cycling performance by groups of four bytes

Symbol	Parameter	Test condition	Min.	Max.	Unit
N_{cycle}	Write cycle endurance(1)	TA ≤ 25 °C, $V_{CC}(min) < V_{CC} < V_{CC}(max)$	-	4,000,000	Write cycle(2)
		TA = 85 °C, $V_{CC}(min) < V_{CC} < V_{CC}(max)$	-	1,200,000	

1. *The Write cycle endurance is defined for groups of four data bytes located at addresses [4*N, 4*N+1, 4*N+2, 4*N+3], where N is an integer. The Write cycle endurance is defined by characterization and qualification.*
2. *A Write cycle is executed when either a Page write, a Byte write, a WRSR, a WRID or an LID instruction is decoded. When using the Byte write, the Page write or the WRID instruction, refer also to Section 6.6.1 Cycling with error correction code (ECC x4).*

Table 14. Memory cell data retention

Parameter	Test condition	Min.	Unit
Data retention(1)	TA = 55 °C	200	Year

1. *The data retention behaviour is checked in production, while the 200-year limit is defined from characterization and qualification results.*

Table 15. Capacitance

Symbol	Parameter	Test condition(1)	Min.	Max.	Unit
C_{OUT}	Output capacitance (Q)	V_{OUT} = 0 V	-	8	pF
C_{IN}	Input capacitance (D)	V_{IN} = 0 V	-	8	pF
	Input capacitance (other pins)	V_{IN} = 0 V	-	6	pF

1. *Sampled only, not 100% tested, at T_A = 25 °C and a frequency of 5 MHz*

Table 16. DC characteristics (M95128-W, device grade 6)

Symbol	Parameter	Test conditions specified in Table 9 and Table 12	Min.	Max.	Unit
I_{LI}	Input leakage current	$V_{IN} = V_{SS}$ or V_{CC}	-	± 2	µA
I_{LO}	Output leakage current	$\overline{S} = V_{CC}$, $V_{OUT} = V_{SS}$ or V_{CC}	-	± 2	µA
I_{CC}	Supply current (Read)	V_{CC}= 2.5 V, C = 0.1 V_{CC} / 0.9 V_{CC} at 10 MHz, Q = open	-	2	mA
		V_{CC}= 5.5 V, C = 0.1 V_{CC} / 0.9 V_{CC} at 20 MHz, Q = open	-	5	
I_{CC0} (1)	Supply current (Write)	During t_W, $\overline{S} = V_{CC}$, 2.5 V < V_{CC} < 5.5 V	-	3	mA
I_{CC1}	Supply current (Standby)	$\overline{S} = V_{CC}$, V_{CC}= 5.5 V, $V_{IN} = V_{SS}$ or V_{CC}	-	3	µA
		$\overline{S} = V_{CC}$, V_{CC}= 2.5 V, $V_{IN} = V_{SS}$ or V_{CC}	-	2	
V_{IL}	Input low voltage	-	–0.45	0.3 V_{CC}	V
V_{IH}	Input high voltage	-	0.7 V_{CC}	V_{CC}+1	V
V_{OL}	Output low voltage	V_{CC} = 2.5 V and I_{OL} = 1.5 mA or V_{CC} = 5 V and I_{OL} = 2 mA	-	0.4	V
V_{OH}	Output high voltage	V_{CC} = 2.5 V and I_{OH} = –0.4 mA or V_{CC} = 5 V and I_{OH} = –2 mA	0.8 V_{CC}	-	V

1. *Characterized only, not tested in production.*

Table 17. DC characteristics (M95128-R, device grade 6)

Symbol	Parameter	Test conditions in addition to those defined in Table 10 and Table 12 (1)	Min	Max	Unit
I_{LI}	Input leakage current	$V_{IN} = V_{SS}$ or V_{CC}	-	± 2	µA
I_{LO}	Output leakage current	$\overline{S} = V_{CC}$, voltage applied on Q = V_{SS} or V_{CC}	-	± 2	µA
I_{CC}	Supply current (Read)	V_{CC}= 1.8 V, C = 0.1 V_{CC} or 0.9 V_{CC} at 5 MHz , Q = open	-	2	mA
I_{CC0} (2)	Supply current (Write)	V_{CC} = 1.8 V , during t_W, $\overline{S} = V_{CC}$	-	3	mA
I_{CC1}	Supply current (Standby)	V_{CC} = 1.8 V, $\overline{S} = V_{CC}$, $V_{IN} = V_{SS}$ or V_{CC}	-	1	µA
V_{IL}	Input low voltage	1.8 V ≤ V_{CC} < 2.5 V	–0.45	0.25 V_{CC}	V
V_{IH}	Input high voltage	1.8 V ≤ V_{CC} < 2.5 V	0.75 V_{CC}	V_{CC}+1	V
V_{OL}	Output low voltage	I_{OL} = 0.15 mA, V_{CC} = 1.8 V	-	0.3	V
V_{OH}	Output high voltage	I_{OH} = –0.1 mA, V_{CC} = 1.8 V	0.8 V_{CC}	-	V

1. *If the application uses the M95128-R with 2.5 V < V_{CC} < 5.5 V and -40 °C < T_A < +85 °C, refer to Table 16 rather then the above table.*
2. *Characterized only, not tested in production.*

Table 18. DC characteristics (M95128-DF, device grade 6)

Symbol	Parameter	Test conditions in Table 11 and Table 12(1)	Min.	Max.	Unit
I_{LI}	Input leakage current	$V_{IN} = V_{SS}$ or V_{CC}	-	± 2	µA
I_{LO}	Output leakage current	$\overline{S} = V_{CC}$, voltage applied on Q = V_{SS} or V_{CC}	-	± 2	µA
I_{CC}	Supply current (Read)	V_{CC} = 1.7 V, C = 0.1 V_{CC} or 0.9 V_{CC}, at 5 MHz, Q = open	-	2	mA
I_{CC0}(2)	Supply current (Write)	V_{CC} = 1.7 V, during t_W, $\overline{S} = V_{CC}$	-	3	mA
I_{CC1}	Supply current (Standby)	V_{CC} = 1.7 V, $\overline{S} = V_{CC}$, $V_{IN} = V_{SS}$ or V_{CC}	-	1	µA
V_{IL}	Input low voltage	1.7 V ≤ V_{CC} < 2.5 V	–0.45	0.25 V_{CC}	V
V_{IH}	Input high voltage	1.7 V ≤ V_{CC} < 2.5 V	0.75 V_{CC}	V_{CC}+1	V
V_{OL}	Output low voltage	I_{OL} = 0.15 mA, V_{CC} = 1.7 V	-	0.3	V
V_{OH}	Output high voltage	I_{OH} = –0.1 mA, V_{CC} = 1.7 V	0.8 V_{CC}	-	V

1. *If the application uses the M95128-DF devices at 2.5 V ≤ V_{CC} < 2.5 V and –40 °C ≤TA ≤+85 °C, refer to Table 16. DC characteristics (M95128-W, device grade 6) rather than to the above table. If the application uses the M95128-DF devices at 1.8 V ≤ V_{CC} < 2.5 V and –40 °C ≤ TA ≤ +85 °C, refer to Table 17. DC characteristics (M95128-R, device grade 6), rather than to the above table.*
2. *Characterized only, not tested in production.*

Table 19. AC characteristics (M95128-W, device grade 6)

Test conditions specified in Table 9			V ≥ 2.5V		V_{CC} ≥ 4.5V		Unit
Symbol	Alt.	Parameter	Min.	Max.	Min.	Max.	
f_C	f_{SCK}	Clock frequency	D.C.	10	D.C.	20	MHz
t_{SLCH}	t_{CSS1}	$\overline{S}$ active setup time	30	-	15	-	ns
t_{SHCH}	t_{CSS2}	$\overline{S}$ not active setup time	30	-	15	-	ns
t_{SHSL}	t_{CS}	$\overline{S}$ deselect time	40	-	20	-	ns
t_{CHSH}	t_{CSH}	$\overline{S}$ active hold time	30	-	15	-	ns
t_{CHSL}	-	$\overline{S}$ not active hold time	30	-	15	-	ns
t_{CH} (1)	t_{CLH}	Clock high time	40	-	20	-	ns
t_{CL} (1)	t_{CLL}	Clock low time	40	-	20	-	ns
t_{CLCH} (1)	t_{RC}	Clock rise time	-	2	-	2	µs
t_{CHCL} (1)	t_{FC}	Clock fall time	-	2	-	2	µs
t_{DVCH}	t_{DSU}	Data in setup time	10	-	5	-	ns
t_{CHDX}	t_{DH}	Data in hold time	10	-	10	-	ns
t_{HHCH}	-	Clock low hold time after $\overline{HOLD}$ not active	30	-	15	-	ns
t_{HLCH}	-	Clock low hold time after $\overline{HOLD}$ active	30	-	15	-	ns
t_{CLHL}	-	Clock low setup time before $\overline{HOLD}$ active	0	-	0	-	ns
t_{CLHH}	-	Clock low setup time before $\overline{HOLD}$ not active	0	-	0	-	ns
t_{SHQZ} (2)	t_{DIS}	Output disable time	-	40	-	20	ns
t_{CLQV}	t_V	Clock low to output valid	-	40	-	20	ns
t_{CLQX}	t_{HO}	Output hold time	0	-	0	-	ns
t_{HHQV}	t_{LZ}	$\overline{HOLD}$ high to output valid	-	40	-	20	ns
t_{HLQZ} (2)	t_{HZ}	$\overline{HOLD}$ low to output High-Z	-	40	-	20	ns
t_W	t_{WC}	Write time	-	5	-	5	ms

1. *t_{CH} + t_{CL} must never be less than the shortest possible clock period, 1 / f_C(max).*
2. *Characterized only, not tested in production.*

Table 20. AC characteristics (M95128-R, device grade 6)

Test conditions specified in Table 10									
Symbol	Alt.	Parameter	$V_{CC} \geq 1.8V$		$V_{CC} \geq 2.5V$		$V_{CC} \geq 4.5V$		Unit
			Min.	Max.	Min.	Max.	Min.	Max.	
f_C	f_{SCK}	Clock frequency	-	5	-	10	-	20	MHz
t_{SLCH}	t_{CSS1}	$\overline{S}$ active setup time	60	-	30	-	15	-	ns
t_{SHCH}	t_{CSS2}	$\overline{S}$ not active setup time	60	-	30	-	15	-	ns
t_{SHSL}	t_{CS}	$\overline{S}$ deselect time	90	-	40	-	20	-	ns
t_{CHSH}	t_{CSH}	$\overline{S}$ active hold time	60	-	30	-	15	-	ns
t_{CHSL}	-	$\overline{S}$ not active hold time	60	-	30	-	15	-	ns
t_{CH} (1)	t_{CLH}	Clock high time	80	-	40	-	20	-	ns
t_{CL} (1)	t_{CLL}	Clock low time	80	-	40	-	20	-	ns
t_{CLCH} (2)	t_{RC}	Clock rise time	-	2	-	2	-	2	µs
t_{CHCL} (2)	t_{FC}	Clock fall time	-	2	-	2	-	2	µs
t_{DVCH}	t_{DSU}	Data in setup time	20	-	10	-	5	-	ns
t_{CHDX}	t_{DH}	Data in hold time	20	-	10	-	10	-	ns
t_{HHCH}	-	Clock low hold time after $\overline{HOLD}$ not active	60	-	30	-	15	-	ns
t_{HLCH}	-	Clock low hold time after $\overline{HOLD}$ active	60	-	30	-	15	-	ns
t_{CLHL}	-	Clock low setup time before $\overline{HOLD}$ active	0	-	0	-	0	-	ns
t_{CLHH}	-	Clock low setup time before $\overline{HOLD}$ not active	0	-	0	-	0	-	ns
t_{SHQZ} (2)	t_{DIS}	Output disable time	-	80	-	40	-	20	ns
t_{CLQV}	t_V	Clock low to output valid	-	80	-	40	-	20	ns
t_{CLQX}	t_{HO}	Output hold time	0	-	0	-	0	-	ns
t_{HHQV}	t_{LZ}	$\overline{HOLD}$ high to output valid	-	80	-	40	-	20	ns
t_{HLQZ} (2)	t_{HZ}	$\overline{HOLD}$ low to output High-Z	-	80	-	40	-	20	ns
t_W	t_{WC}	Write time	-	5	-	5	-	5	ms

1. *$t_{CH} + t_{CL}$ must never be less than the shortest possible clock period, $1 / f_C(max)$.*
2. *Characterized only, not tested in production.*

Table 21. AC characteristics (M95128-DF, device grade 6)

Test conditions specified in Table 11									
Symbol	Alt.	Parameter	$V_{CC} \geq 1.7V$		$V_{CC} \geq 2.5V$		$V_{CC} \geq 4.5V$		Unit
			Min.	Max.	Min.	Max.	Min.	Max.	
f_C	f_{SCK}	Clock frequency	-	5	-	10	-	20	MHz
t_{SLCH}	t_{CSS1}	$\overline{S}$ active setup time	60	-	30	-	15	-	ns
t_{SHCH}	t_{CSS2}	$\overline{S}$ not active setup time	60	-	30	-	15	-	ns
t_{SHSL}	t_{CS}	$\overline{S}$ deselect time	90	-	40	-	20	-	ns
t_{CHSH}	t_{CSH}	$\overline{S}$ active hold time	60	-	30	-	15	-	ns
t_{CHSL}	-	$\overline{S}$ not active hold time	60	-	30	-	15	-	ns
t_{CH} (1)	t_{CLH}	Clock high time	80	-	40	-	20	-	ns
t_{CL} (1)	t_{CLL}	Clock low time	80	-	40	-	20	-	ns
t_{CLCH} (2)	t_{RC}	Clock rise time	-	2	-	2	-	2	µs
t_{CHCL}	t_{FC}	Clock fall time	-	2	-	2	-	2	µs
t_{DVCH}	t_{DSU}	Data in setup time	20	-	10	-	5	-	ns
t_{CHDX}	t_{DH}	Data in hold time	20	-	10	-	10	-	ns
t_{HHCH}	-	Clock low hold time after $\overline{HOLD}$ not active	60	-	30	-	15	-	ns
t_{HLCH}	-	Clock low hold time after $\overline{HOLD}$ active	60	-	30	-	15	-	ns
t_{CLHL}	-	Clock low setup time before $\overline{HOLD}$ active	0	-	0	-	0	-	ns
t_{CLHH}	-	Clock low setup time before $\overline{HOLD}$ not active	0	-	0	-	0	-	ns
t_{SHQZ} (2)	t_{DIS}	Output disable time	-	80	-	40	-	20	ns
t_{CLQV}	t_V	Clock low to output valid	-	80	-	40	-	20	ns
t_{CLQX}	t_{HO}	Output hold time	0	-	0	-	0	-	ns
t_{HHQV}	t_{LZ}	$\overline{HOLD}$ high to output valid	-	80	-	40	-	20	ns
t_{HLQZ} (2)	t_{HZ}	$\overline{HOLD}$ low to output High-Z	-	80	-	40	-	20	ns
t_W	t_{WC}	Write time	-	5	-	5	-	5	ms

1. *$t_{CH} + t_{CL}$ must never be less than the shortest possible clock period, $1 / f_C(max)$.*
2. *Characterized only, not tested in production.*

Figure 20. **Serial input timing**

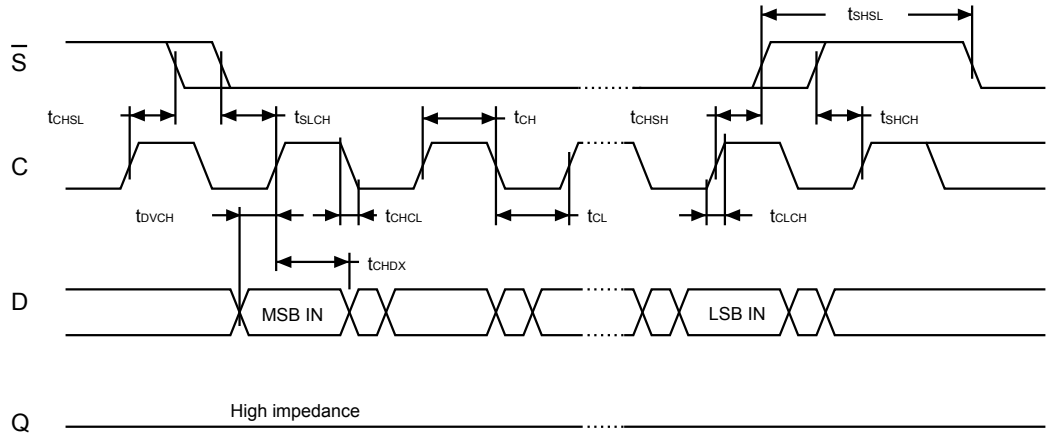

Figure 21. **Hold timing**

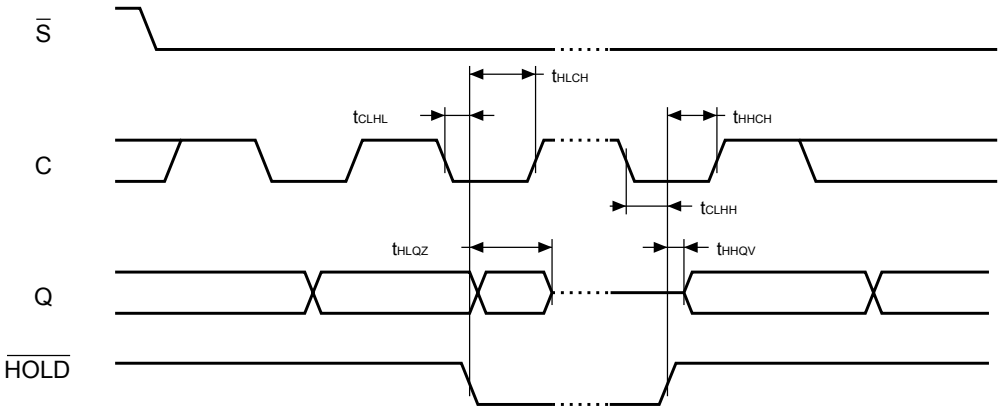

Figure 22. **Serial output timing**

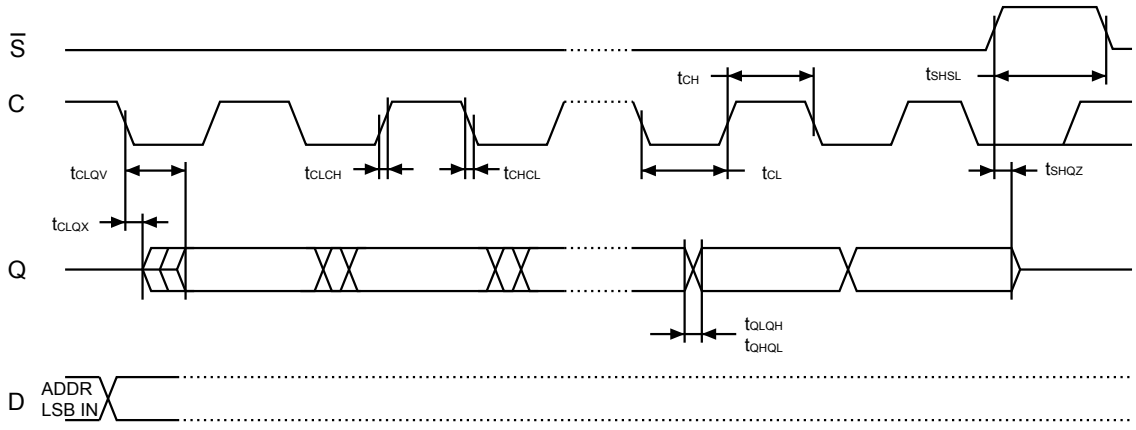

10 Package information

In order to meet environmental requirements, ST offers these devices in different grades of ECOPACK packages, depending on their level of environmental compliance. ECOPACK specifications, grade definitions and product status are available at: www.st.com. ECOPACK is an ST trademark.

10.1 SO8N package information

SO8N is an 8-lead, 4.9 x 6 mm, plastic small outline, 150 mils body width, package.

Figure 23. SO8N – Outline

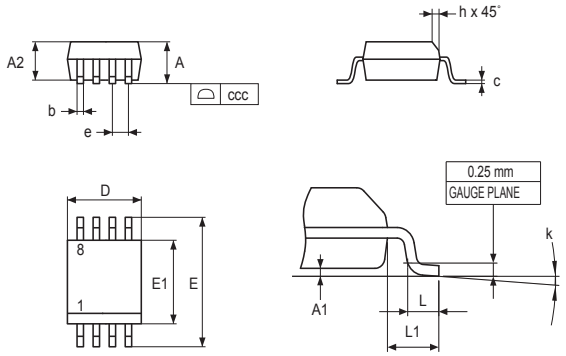

1. Drawing is not to scale.

Table 22. SO8N – Mechanical data

Symbol	millimeters			inches [1]		
	Min.	Typ.	Max.	Min.	Typ.	Max.
A	-	-	1.750	-	-	0.0689
A1	0.100	-	0.250	0.0039	-	0.0098
A2	1.250	-	-	0.0492	-	-
b	0.280	-	0.480	0.0110	-	0.0189
c	0.170	-	0.230	0.0067	-	0.0091
D	4.800	4.900	5.000	0.1890	0.1929	0.1969
E	5.800	6.000	6.200	0.2283	0.2362	0.2441
E1	3.800	3.900	4.000	0.1496	0.1535	0.1575
e	-	1.270	-	-	0.0500	-
h	0.250	-	0.500	0.0098	-	0.0197
k	0°	-	8°	0°	-	8°
L	0.400	-	1.270	0.0157	-	0.0500
L1	-	1.040	-	-	0.0409	-
ccc	-	-	0.100	-	-	0.0039

1. *Values in inches are converted from mm and rounded to four decimal digits.*

Figure 24. **SO8N - Recommended footprint**

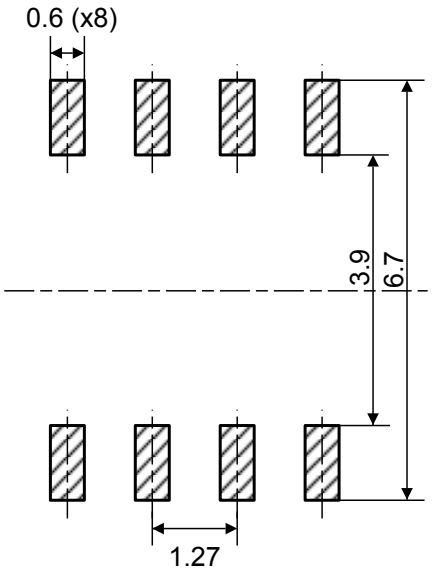

1. Dimensions are expressed in millimeters.

10.2 TSSOP8 package information

TSSOP8 is an 8-lead thin shrink small outline, 3 x 6.4 mm, 0.65 mm pitch, package.

Figure 25. TSSOP8 – Outline

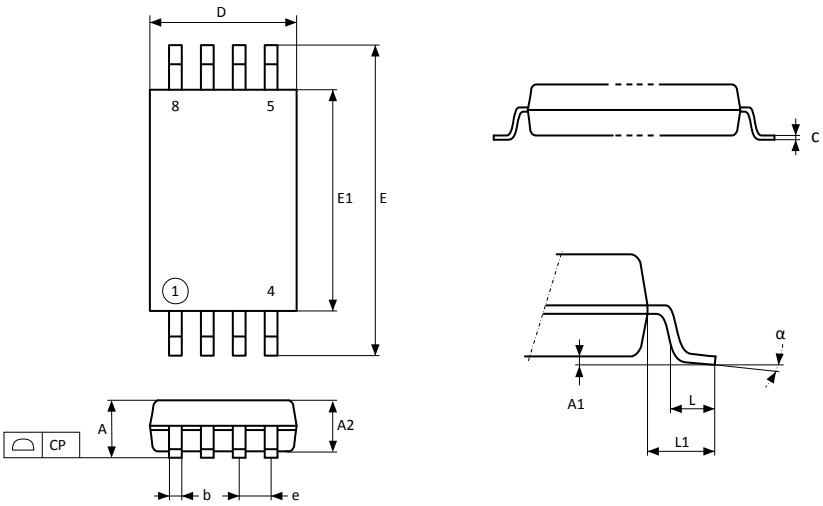

1. Drawing is not to scale.

Table 23. TSSOP8 – Mechanical data

Symbol	millimeters			inches [1]		
	Min.	Typ.	Max.	Min.	Typ.	Max.
A	-	-	1.200	-	-	0.0472
A1	0.050	-	0.150	0.0020	-	0.0059
A2	0.800	1.000	1.050	0.0315	0.0394	0.0413
b	0.190	-	0.300	0.0075	-	0.0118
c	0.090	-	0.200	0.0035	-	0.0079
CP	-	-	0.100	-	-	0.0039
D	2.900	3.000	3.100	0.1142	0.1181	0.1220
e	-	0.650	-	-	0.0256	-
E	6.200	6.400	6.600	0.2441	0.2520	0.2598
E1	4.300	4.400	4.500	0.1693	0.1732	0.1772
L	0.450	0.600	0.750	0.0177	0.0236	0.0295
L1	-	1.000	-	-	0.0394	-
α	0°	-	8°	0°	-	8°

1. *Values in inches are converted from mm and rounded to four decimal digits.*

Figure 26. **TSSOP8 – Recommended footprint**

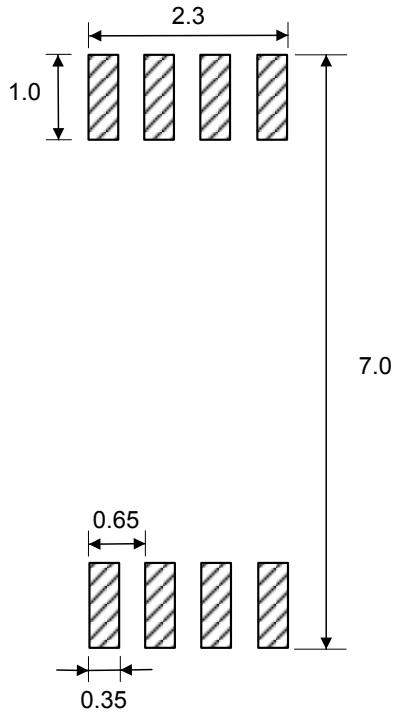

1. Dimensions are expressed in millimeters.

10.3 UFDFPN8 (DFN8) package information

UFDFPN8 is an 8-lead, 2 × 3 mm, 0.55 mm thickness ultra thin profile fine pitch dual flat package.

Figure 27. UFDFPN8 - Outline

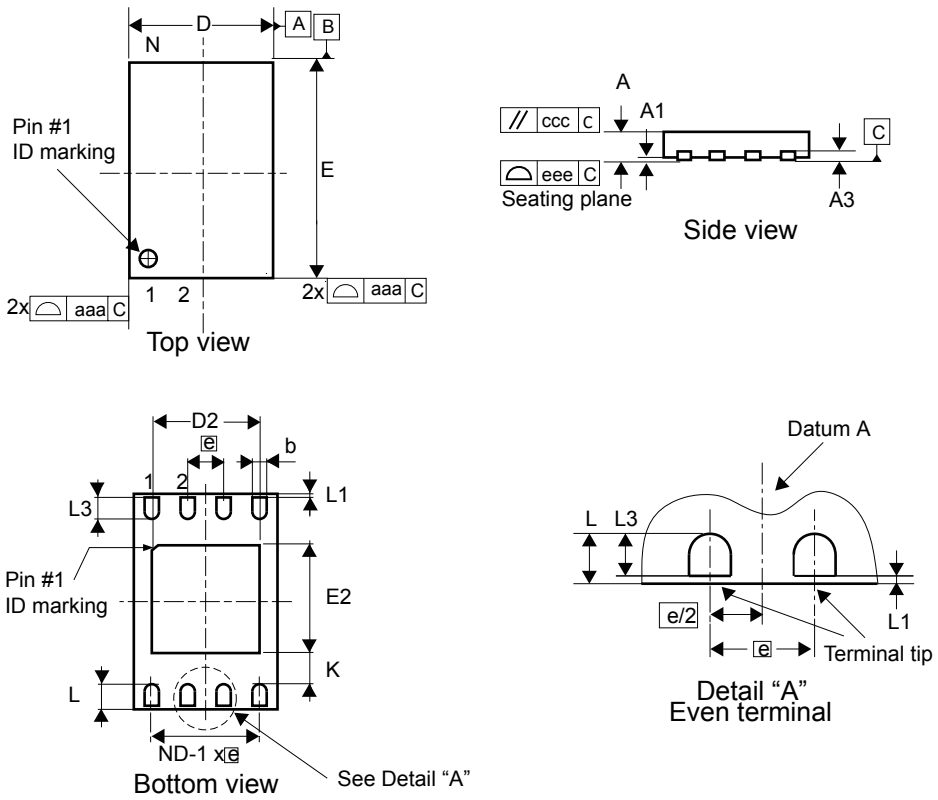

1. Maximum package warpage is 0.05 mm.
2. Exposed copper is not systematic and can appear partially or totally according to the cross section.
3. Drawing is not to scale.
4. The central pad (the area E2 by D2 in the above illustration) must be either connected to V_{SS} or left floating (not connected) in the end application.

Table 24. UFDFPN8 - Mechanical data

Symbol	millimeters			inches[1]		
	Min	Typ	Max	Min	Typ	Max
A	0.450	0.550	0.600	0.0177	0.0217	0.0236
A1	0.000	0.020	0.050	0.0000	0.0008	0.0020
b[2]	0.200	0.250	0.300	0.0079	0.0098	0.0118
D	1.900	2.000	2.100	0.0748	0.0787	0.0827
D2	1.200	-	1.600	0.0472	-	0.0630
E	2.900	3.000	3.100	0.1142	0.1181	0.1220
E2	1.200	-	1.600	0.0472	-	0.0630
e	-	0.500	-	0.0197		
K	0.300	-	-	0.0118	-	-
L	0.300	-	0.500	0.0118	-	0.0197
L1	-	-	0.150	-	-	0.0059
L3	0.300	-	-	0.0118	-	-
aaa	-	-	0.150	-	-	0.0059
bbb	-	-	0.100	-	-	0.0039
ccc	-	-	0.100	-	-	0.0039
ddd	-	-	0.050	-	-	0.0020
eee[3]	-	-	0.080	-	-	0.0031

1. *Values in inches are converted from mm and rounded to four decimal digits.*
2. *Dimension b applies to plated terminal and is measured between 0.15 and 0.30 mm from the terminal tip.*
3. *Applied for exposed die paddle and terminals. Exclude embedding part of exposed die paddle from measuring.*

Figure 28. UFDFPN8 - Recommended footprint

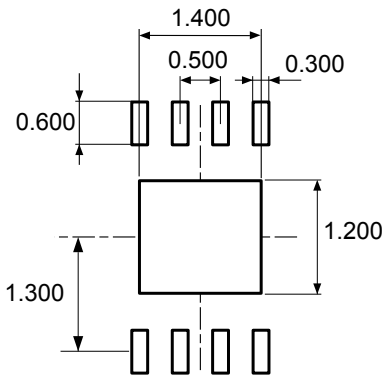

1. Dimensions are expressed in millimeters.

10.4 WLCSP8 (CS) package information

WLCSP8 is a 8 bumps, 1.289 x 1.099 mm, 0.4 mm pitch wafer level chip scale package

Figure 29. WLCSP8 - Outline

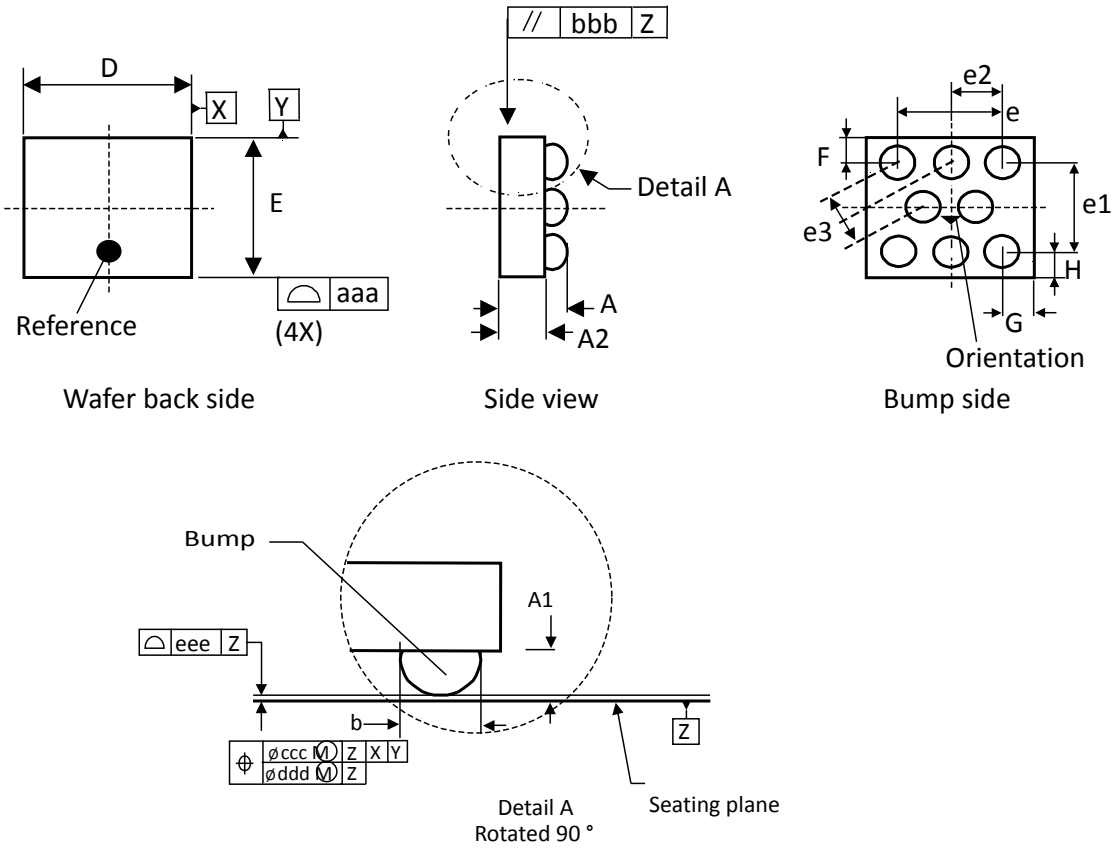

1. Drawing is not to scale
2. Primary datum Z and seating plane are defined by the spherical crowns of the bump.
3. Bump position designation per JESD 95-1, SPP-010.

Table 25. WLCSP8 - Mechanical data

Symbol	millimeters			inches[1]		
	Min	Typ	Max	Min	Typ	Max
A	0.500	0.540	0.580	0.0197	0.0213	0.0228
A1	-	0.190	-	-	0.0075	-
A2	-	0.350	-	-	0.0138	-
b[2]	-	0.270	-	-	0.0106	-
D	-	1.289	1.309	-	0.0507	0.0515
E	-	1.099	1.119	-	0.0433	0.0441
e	-	0.800	-	-	0.0315	-
e1	-	0.693	-	-	0.0273	-
e2	-	0.400	-	-	0.0157	-
e3	-	0.400	-	-	0.0157	-
F	-	0.203	-	-	0.0080	-
G	-	0.245	-	-	0.0096	-
H	-	0.203	-	-	0.0080	-
aaa	-	0.110	-	-	0.0043	-
bbb	-	0.110	-	-	0.0043	-
ccc	-	0.110	-	-	0.0043	-
ddd	-	0.060	-	-	0.0024	-
eee	-	0.060	-	-	0.0024	-

1. *Values in inches are converted from mm and rounded to four decimal digits.*
2. *Dimension is measured at the maximum bump diameter parallel to primary datum Z.*

Figure 30. WLCSP8 - Recommended footprint

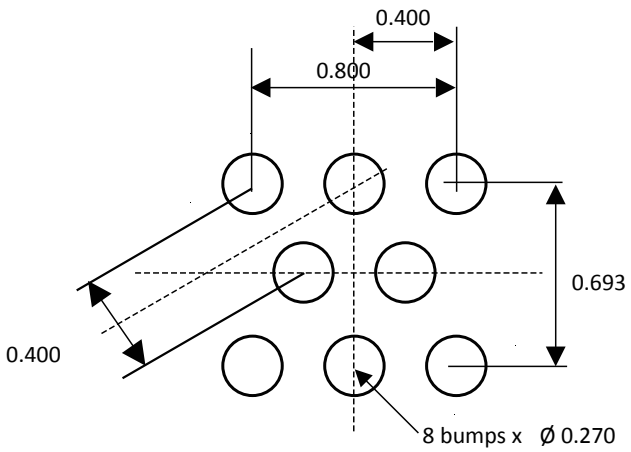

1. Dimensions are expressed in millimeters.

11 Ordering information

Table 26. Ordering information scheme

Example: M95 128 -D W MN 6 T P \K

Device type

M95 = SPI serial access EEPROM

Device function

128 = 128 Kbit (16384 x 8)

Device family

Blank = Without Identification page

D = With additional Identification page

Operating voltage

W = V_{CC} = 2.5 to 5.5 V

R = V_{CC} = 1.8 to 5.5 V

F = V_{CC} = 1.7 to 5.5 V

Package(1)

MN = SO8 (150 mil width)

DW = TSSOP8 (169 mil width)

MC = UFDFPN8 (DFN8)

CS = WLCSP

Device grade

6 = Industrial temperature range, –40 to 85 °C

Device tested with standard test flow

Option

blank = tube packing

T = Tape and reel packing

Plating technology

G or P = RoHS compliant and halogen-free (ECOPACK2®)

Process(2)

/K = Manufacturing technology code

1. *All packages are ECOPACK2® (RoHS-compliant and free of brominated, chlorinated and antimony-oxide flame retardants).*
2. *These process letters appear on the device package (marking) and on the shipment box. Please contact your nearest ST Sales Office for further information*

Note: Parts marked as "ES", "E" or accompanied by an Engineering Sample notification letter, are not yet qualified and therefore not approved for use in production. ST is not responsible for any consequences resulting from such use. In no event will ST be liable for the customer using any of these engineering samples in production. ST Quality has to be contacted prior to any decision to use these Engineering samples to run qualification activity.

Revision history

Table 27. **Document revision history**

Date	Revision	Changes
17-Feb-2009	11	Section 3.8: Supply voltage (VCC) and Section 5.4: Write Status Register (WRSR) updated. Note added to Section 5.6: Write to Memory Array (WRITE). ICC modified in Table 12: DC characteristics (M95128, device grade 3). VRES added to DC characteristics tables 12, 20, 14 and 23. Note added to Table 36: AC characteristics (M95080-R, M95080-DR device grade 6). Note added below Figure 20: UFDFPN8, 8-lead ultra thin fine pitch dual flat package no lead 2 x 3 mm, outline. Small text changes.
12-Jan-2010	12	Section 5.6.1: ECC (error correction code) and write cycling modified (applies to all devices). T_{LEAD}, I_{OL} and I_{OH} added to Table 6: Absolute maximum ratings. Note added to Table 23: DC characteristics (current and new M95080-R and M95080-DR products). Process modified in Table 45: Ordering information scheme. All packages are ECOPACK2 compliant.
02-Mar-2010	13	Section 5.6.1: ECC (error correction code) and write cycling and Table 24: Available M95128x products (package, voltage range, temperature grade) updated.
03-Jan-2012	14	Updated UFDFPN8 package data.
06-Aug-2012	15	Datasheet revision 14 split into: - M95128-125 datasheet for automotive products (range 3), - M95128-W M95128-R M95128-DF (this datasheet) for standard products (range 6). Updated: – Cycling: 4 million cycles – Data retention: 200 years – Max clock frequency: 5 MHz@1.7 V, 10 MHz@2.5 V, 20 MHz@4.5 V. Added: – Identification page (for M95128-D devices) – 1.7 V/5.5 V range (F suffix)
19-Dec-2012	16	- Added “Additional Write lockable page (Identification page)” and replaced “(ECOPACK®)” with “(ECOPACK2®)” in Features. – Updated Table 2: Write-protected block size. – Updated Section 7.2: Initial delivery state. – Replaced Figure 38 and Table 54 (UFDFPN8 package). – Added Note (1) to Table 25: Ordering information scheme.
20-May-2015	17	Replaced “ball” by “bump” in the entire document. Updated Features and WLCSP package figure on cover page. Updated Figure 3: WLCSP connections (top view, marking side, with bumps on the underside) and Figure 4: Block diagram. Removed Caution note on UV exposure in Section 1: Description. Updated Section 5.1.3: Power-up conditions, Section 5.3: Hold condition and tables in Section 6: Instructions. Updated Table 7: Absolute maximum ratings and its footnotes. Updated Table 15: DC characteristics (M95128-W, device grade 6). Updated Section 10: Package information with changes in each of Sections 10.1: SO8N package information, 10.2: TSSOP8 package information, 10.3: UFDFN8 package information and Section 10.4: WLCSP package information.

Date	Revision	Changes
		Updated Table 25: Ordering information scheme and added Note: on Engineering samples. Updated Disclaimer
21-Sep-2015	18	Updated title of Table 8: Operating conditions (M95128-W, device grade 6), Table 19: AC characteristics (M95128-R, device grade 6) and Table 20: AC characteristics (M95128-DF, device grade 6). Updated title and footnotes of Table 15: DC characteristics (M95128-W, device grade 6) Table 16: DC characteristics (M95128-R, device grade 6), Table 17: DC characteristics (M95128-DF, device grade 6) and Table 18: AC characteristics (M95128-W, device grade 6). Updated footnote 1 of Table 7: Absolute maximum ratings. Added footnote 4 to Figure 26.
22-Feb-2017	19	Updated Section 6.6.1: Cycling with Error Correction Code (ECC) and Section 10.4: WLCSP package information. Updated Figure 6: SPI modes supported, Figure 8: Write Enable (WREN) sequence and Figure 9: Write Disable (WRDI) sequence. Updated caption of Figure 25: TSSOP8 – 8-lead thin shrink small outline, 3 x 4.4 mm, 0.65 mm pitch, package outline and of Figure 22: TSSOP8 – 8-lead thin shrink small outline, 3 x 4.4 mm, 0.65 mm pitch, package mechanical data.
27-Oct-2020	20	Added: • Table 2. Signals vs. bump position • Figure 24. SO8N - Recommended footprint • Figure 26. TSSOP8 – Recommended footprint Updated: • Figure 4. Block diagram

Contents

1 **Description** 2
2 **Memory organization** 4
3 **Signal description** 5
3.1 Serial data output (Q) 5
3.2 Serial data input (D) 5
3.3 Serial clock (C) 5
3.4 Chip select 5
3.5 Hold 5
3.6 Write protect 5
3.7 VCC supply voltage 5
3.8 VSS ground 5
4 **Connecting to the SPI bus** 6
4.1 SPI modes 7
5 **Operating features** 8
5.1 Supply voltage (VCC) 8
5.1.1 Operating supply voltage (VCC) 8
5.1.2 Device reset 8
5.1.3 Power-up conditions 8
5.1.4 Power-down 8
5.2 Active power and Standby power modes 8
5.3 Hold condition 9
5.4 Status register 9
5.5 Data protection and protocol control 10
6 **Instructions** 11
6.1 Write enable (WREN) 12
6.2 Write disable (WRDI) 13
6.3 Read Status register (RDSR) 14
6.3.1 WIP bit 14
6.3.2 WEL bit 14

6.3.3 BP1, BP0 bits . . . 14
6.3.4 SRWD bit . . . 15
6.4 Write Status register (WRSR) . . . 15
6.5 Read from Memory array (READ) . . . 17
6.6 Write to Memory array (WRITE) . . . 18
6.6.1 Cycling with error correction code (ECC x4) . . . 20
6.7 Read Identification page (available only in M95128-D devices) . . . 20
6.8 Write Identification page (available only in M95128-D devices) . . . 21
6.9 Read Lock status (available only in M95128-D devices) . . . 21
6.10 Lock ID (available only in M95128-D devices) . . . 22
7 Power-up and delivery state . . . 23
7.1 Power-up state . . . 23
7.2 Initial delivery state . . . 23
8 Maximum ratings . . . 24
9 DC and AC parameters . . . 25
10 Package information . . . 33
10.1 SO8N package information . . . 33
10.2 TSSOP8 package information . . . 35
10.3 UFDFPN8 (DFN8) package information . . . 37
10.4 WLCSP package information . . . 39
11 Ordering information . . . 41
Revision history . . . 42

List of tables

Table 1. Signal names . . . 2
Table 2. Signals vs. bump position . . . 3
Table 3. Write-protected block size . . . 10
Table 4. Instruction set . . . 11
Table 5. Significant bits within the address bytes . . . 11
Table 6. Status register format . . . 15
Table 7. Protection modes . . . 16
Table 8. Absolute maximum ratings . . . 24
Table 9. Operating conditions (M95128-W, device grade 6) . . . 25
Table 10. Operating conditions (M95128-R, device grade 6) . . . 25
Table 11. Operating conditions (M95128-DF, device grade 6) . . . 25
Table 12. AC measurement conditions . . . 25
Table 13. Cycling performance by groups of four bytes . . . 26
Table 14. Memory cell data retention . . . 26
Table 15. Capacitance . . . 26
Table 16. DC characteristics (M95128-W, device grade 6) . . . 27
Table 17. DC characteristics (M95128-R, device grade 6) . . . 27
Table 18. DC characteristics (M95128-DF, device grade 6) . . . 28
Table 19. AC characteristics (M95128-W, device grade 6) . . . 29
Table 20. AC characteristics (M95128-R, device grade 6) . . . 30
Table 21. AC characteristics (M95128-DF, device grade 6) . . . 31
Table 22. SO8N – Mechanical data . . . 33
Table 23. TSSOP8 – Mechanical data . . . 35
Table 24. UFDFPN8 - Mechanical data . . . 38
Table 25. WLCSP8 - Mechanical data . . . 40
Table 26. Ordering information scheme . . . 41
Table 27. Document revision history . . . 42

List of figures

Figure 1. Logic diagram . . . 2
Figure 2. 8-pin package connections (top view) . . . 3
Figure 3. WLCSP connections (top view, marking side, with bumps on the underside) . . . 3
Figure 4. Block diagram . . . 4
Figure 5. Bus master and memory devices on the SPI bus . . . 6
Figure 6. SPI modes supported . . . 7
Figure 7. Hold condition activation . . . 9
Figure 8. Write enable (WREN) sequence . . . 12
Figure 9. Write disable (WRDI) sequence . . . 13
Figure 10. Read Status register (RDSR) sequence . . . 14
Figure 11. Write Status register (WRSR) sequence . . . 15
Figure 12. Read from Memory array (READ) sequence . . . 17
Figure 13. Byte Write (WRITE) sequence . . . 18
Figure 14. Page Write (WRITE) sequence . . . 19
Figure 15. Read Identification page sequence . . . 20
Figure 16. Write Identification page sequence . . . 21
Figure 17. Read Lock status sequence . . . 21
Figure 18. Lock ID sequence . . . 22
Figure 19. AC measurement I/O waveform . . . 25
Figure 20. Serial input timing . . . 32
Figure 21. Hold timing . . . 32
Figure 22. Serial output timing . . . 32
Figure 23. SO8N – Outline . . . 33
Figure 24. SO8N - Recommended footprint . . . 34
Figure 25. TSSOP8 – Outline . . . 35
Figure 26. TSSOP8 – Recommended footprint . . . 36
Figure 27. UFDFPN8 - Outline . . . 37
Figure 28. UFDFPN8 - Recommended footprint . . . 38
Figure 29. WLCSP8 - Outline . . . 39
Figure 30. WLCSP8 - Recommended footprint . . . 40

IMPORTANT NOTICE – PLEASE READ CAREFULLY

STMicroelectronics NV and its subsidiaries (“ST”) reserve the right to make changes, corrections, enhancements, modifications, and improvements to ST products and/or to this document at any time without notice. Purchasers should obtain the latest relevant information on ST products before placing orders. ST products are sold pursuant to ST’s terms and conditions of sale in place at the time of order acknowledgement.

Purchasers are solely responsible for the choice, selection, and use of ST products and ST assumes no liability for application assistance or the design of Purchasers’ products.

No license, express or implied, to any intellectual property right is granted by ST herein.

Resale of ST products with provisions different from the information set forth herein shall void any warranty granted by ST for such product.

ST and the ST logo are trademarks of ST. For additional information about ST trademarks, please refer to www.st.com/trademarks. All other product or service names are the property of their respective owners.

Information in this document supersedes and replaces information previously supplied in any prior versions of this document.

© 2020 STMicroelectronics – All rights reserved