STB5600

GPS RF FRONT-END IC

- ONE CHIP SYSTEM TO INTERFACE ACTIVE ANTENNA TO ST20GP1 MICROCONTROLLER
- COMPLETE RECEIVER USING NOVEL DUAL CONVERSION ARCHITECTURE WITH SINGLE IF FILTER
- MINIMUM EXTERNAL COMPONENTS
- COMPATIBLE WITH GPS L1 SPS SIGNAL
- INTERNALLY STABILISED POWER RAILS
- CMOS OUTPUT LEVELS
- FROM 3.3 TO 5.9V SUPPLY VOLTAGE
- TQFP32 PACKAGE

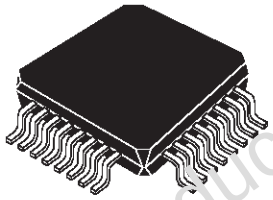

TQFP32

MARKING:
STB5600
TRACEABILITY CODE
ASSY CODE

DESCRIPTION

The STB5600, using STMicroelectronics HSB2, High Speed Bipolar technology, implements a Global Positioning System RF front-end.

The chip provides down conversion from the GPS (L1) signal at 1575 MHz via an IF of 20MHz to an output frequency of 4MHz suitable for ST20GP1 GPS processor.

It uses a single external reference oscillator to generate both RF local oscillator signals and the processor reference clock.

PIN CONNECTION (top view)

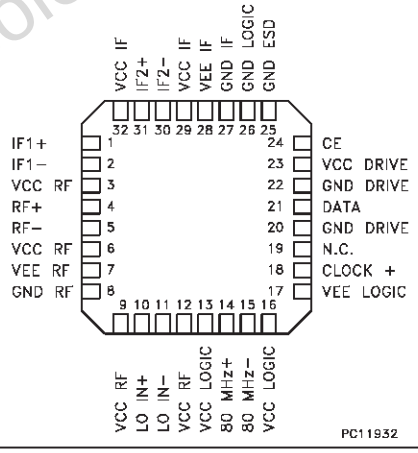

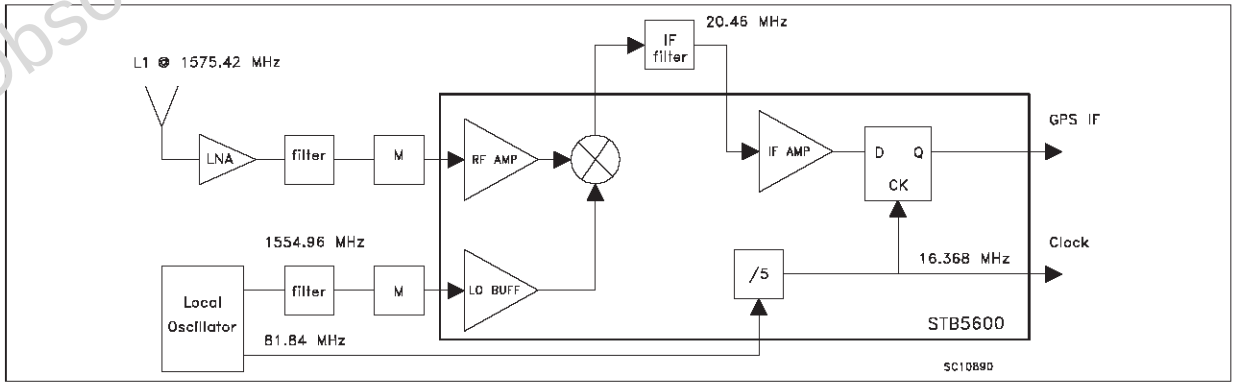

Obsolete Product(s) - Obsolete Product(s)
Obsolete Product(s) - Obsolete Product(s)

FUNCTIONAL DESCRIPTION

The STB5600 GPS front-end is fed with the signal from an active antenna, via a ceramic RF filter. The gain between the antenna element and the STB5600 is expected to be between 10dB and 35dB overall, made up of the antenna LNA gain, the feeder loss, connector loss, and the ceramic filter loss.

In order to use an off-the-shelf ceramic filter, conventionally 50 Ohms single ended, a matching circuit is used. (see appendix A.1), which provides a 300 Ohm differential drive to the STB5600. A similar circuit can be used to feed the LO signal if using the recommended low-cost oscillator circuit (appendix A.3).

Note that the STB5600 radio architecture and the oscillator described here are covered by various patents held by SGS-Thomson and by others. The use of the circuits described in this data-sheet for any other purpose may infringe such patents.

- RF SECTION

The differential input signal is amplified by the RF-Amp and mixed with the oscillator signal amplified from the LO+,LO- inputs to generate a balanced 20.46MHz IF signal. The LO buffer amplifier may be fed differential or single ended signals, at levels between -60dBm and -20dBm.

- IF SECTION

The 20MHz differential signal from the mixer is fed through an external LC filter to suppress undesirable signals and mixer products. The multi-stage high-sensitivity limiting amplifier is connected to a D-type latch clocked by an internally derived 16MHz clock.. The effect of sampling the 20MHz signal at 16MHz is to create a sub-sampling alias at 4MHz. This is fed to the output level-converters.

- DIVIDER SECTION

The 80MHz oscillator signal may be provided single-ended or differentially to the high impedance 80MHz+, 80MHz- inputs. Any unused inputs should be connected to GNDLOGIC via a 1nF capacitor. The 80MHz signal is amplified, then divided by 5 to create the 16.368MHz clock required by the ST20GP1 processor, also used to clock the output latch of the STB5600.

- OUTPUT SECTION

The output latch samples the 20.46MHz intermediate frequency at a 16.368MHz rate, performing the dual function of second downconversion and latching. The downconversion occurs by sub-sampling aliasing, such that the digital output represents a 4.096MHz centre frequency

The output buffers perform level translation from the internal ECL levels to CMOS compatible outputs referred to external ground.

Obsolete Product(s) - Obsolete Product(s)

ABSOLUTE MAXIMUM RATINGS

Symbol	Parameter	Value	Unit
V_{CC}	DC Supply Voltage	5.9	V
RF+, RF-	RF Input	8	dBm
T_j	Junction Temperature	150	^oC
T_{stg}	Storage Temperature Range	-40 to 125	^oC
$R_{thj\text{-}amb}$	Thermal Resistance Junction-ambient	80	$^oC/W$

PIN CONFIGURATION

Apply 5V at the CE, V_{CCRF}, V_{CCIF}, $V_{CCLOGIC}$ pins, apply 3 V at the $V_{CCDRIVE}$

Pin	Symbol	Typ. DC Bias	Dexription	External circuit
1	IF1+	3.6 V	Mixer Output 1	see application circuit
2	IF1-	3.6 V	Mixer Output 2	see application circuit
3	V_{CCRF}	5 V	RF Power Supply	100 nF to V_{EERF}
4	RF+	3.5 V	RF Input	AC Coupled
5	RF-	3.5 V	RF Input	AC Coupled
6	V_{CCRF}	5 V	RF Power Supply	100 nF to VEERF
7	V_{EERF}	2 V	RF Voltage Reference	100 nF to VCCRF
8	GNDRF	0 V	RF Ground	
9	V_{CCRF}	5 V	RF Power Supply	100 nF to VEERF
10	LO+	3.5 V	Local Oscillator Input	AC Coupled
11	LO-	3.5 V	Local Oscillator Input	AC Coupled
12	V_{CCRF}	5 V	RF Power Supply	100 nF to VEERF
13	$V_{CCLOGIC}$	5 V	Logic Power Supply	100 nF to VEELOGIC
14	80 MHz+	4 V	80 MHz Clock Input	AC Coupled
15	80 MHz-	4 V	80 MHz Clock Input	AC Coupled
16	$V_{CCLOGIC}$	5 V	Logic Power Supply	100 nF to VEELOGIC
17	$V_{EELOGIC}$	2 V	Logic Voltage Reference	100 nF to VCCLOGIC
18	CLOCK+	0.3 V or 3 V	16 MHz Clock CMOS Output	7 pF to GND_{DRIVE}
19	Not Connected			
20	GND_{DRIVE}	0 V	CMOS Drive Ground	
21	DATA	0.3 V or 3 V	4 MHz Data CMOS Output	7 pF to GND_{DRIVE}
22	GND_{DRIVE}	0 V	CMOS Drive Ground	
23	$V_{CCDRIVE}$	3 V	CMOS Drive Power Supply	
24	CE	3 V	Chip Enable	
25	GND	0 V	Substrate Ground	
26	GND_{LOGIC}	0 V	Logic Ground	
27	GND_{IF}	0 V	IF Ground	
28	V_{EEIF}	2 V	IF Voltage Reference	100 nF to VCCIF
29	V_{CCIF}	5 V	IF Power Supply	100 nF to VEEIF
30	IF2-	4 V	Limiting Amplifier Input	see application circuit
31	IF2+	4 V	Limiting Amplifier Input	see application circuit
32	V_{CCIF}	5 V	IF Power Supply	100 nF to VEEIF

Obsolete Product(s) - Obsolete Product(s)
Obsolete Product(s) - Obsolete Product(s)

ELECTRICAL SPECIFICATION (V_{VCCRF} = 3.3 V ...5.9 V; V_{VCCIF} = 3.3 V ...5.9 V; $V_{VCC\ LOGIC}$ = 3.3 V ...5.9 V $V_{VCCDRIVE}$ = 3 V; T_a = 25 °C unless otherwise specified)

LNA MIXER

Symbol	Parameter	Note	Min.	Typ.	Max.	Unit
I_{VCCRF}	Supply Current	VVCCRF = 5 V	20		25	mA
Z_{in}	Differential Input Impedance	@ 1575 MHz AC Coupled at RF+ RF- inputs		300 1		Ω pF
Z_{out}	Differential Output Impedance	@ 20 MHz AC Coupled at IF1+ IF1- outputs		70 3		Ω pF
G_C	Voltage Conversion Gain	R_L > 3KΩ, P_{IN} = -80 dBm (V_{in} = 75 µVp on 300 Ω)	35			dB
IIP1	Input Compression Point (1dB)	(see application circuit)	-60			dBm
NF	Noise figure			5		dB
f_{RF}	Input Signal Frequency (L1)			1575		MHz
f_{IF}	Output Signal Frequency			20		MHz

LO INPUT BUFFER

Symbol	Parameter	Note	Min.	Typ.	Max.	Unit
Z_{in}	Differential Input Impedance	@ 1555 MHz AC Coupled at LO+ LO- inputs		300 1		Ω pF
	Input Signal Level		-60	-40	-20	dBm

LIMITING AMPLIFIER

Symbol	Parameter	Note	Min.	Typ.	Max.	Unit
I_{VCCIF}	Supply Current	VVCCIF = 5 V	2.5		3.5	mA
Z_{in}	Differential Input Impedance	@ 20 MHz AC Coupled at IF2+ IF2- inputs		15		KΩ
B	Bandwidth 3dB		5		80	MHz
Sens	Limiter sensitivity	Input Signal @ 20 MHz AC Coupled		100		µVp
V_{INMAX}	Maximum Input Signal	Input Signal @ 20 MHz AC Coupled			0.5	Vp

CLOCK INPUT BUFFER

Symbol	Parameter	Note	Min.	Typ.	Max.	Unit
$I_{VCCLOGIC}$	Supply Current	VVCC LOGIC = 5 V	5		7	mA
Z_{in}	Differential Input Impedance	@ 80 MHz AC Coupled at 8O MHz+ 80 MHz- inputs		8 2		KΩ pF
	Input Signal Level	@ 80 MHz AC Coupled at 8O MHz+ 80 MHz- inputs	5		100	mVp
N	Division Ratio			5		

Obsolete Product(s) - Obsolete Product(s)

ELECTRICAL CHARACTERISTICS (Continued)

OUTPUT SECTION

Symbol	Parameter	Note	Min.	Typ.	Max.	Unit
$I_{VCCDRIVE}$	Supply Current	$V_{VCCDRIVE}$ = 3 V		8		mA
V_{OH}	High output voltage	Vp = $V_{VCCDRIVE}$ = 3 V	Vp-0.4		Vp	V
V_{OL}	Low output voltage	Vn = GNDDRIVE	Vn		Vn+0.4	V
t_r	Rise Time	C_{LOAD} = 7 pF		6		ns
t_f	Fall Time	C_{LOAD} = 7 pF		2		ns

APPLICATION CIRCUIT

A typical application circuit is shown in figure 1. The RF input from the antenna downlead is fed via a ceramic filter and matching circuit to the RF+,RF- pins. The external LNA in the antenna should have between 10 and 35dB of amplifier gain, so the noise measured in a one MHz bandwidth should be

-114dBm for kTB in 1 MHz

+ 2dB LNA noise figure

+10/35 dB LNA gain (net)

Total -102/ 77dBm at connector.

Allowing 2dB for filter loss, -104/-79 is available at the matching circuit.

Fig. 1 Typical Application Circuit

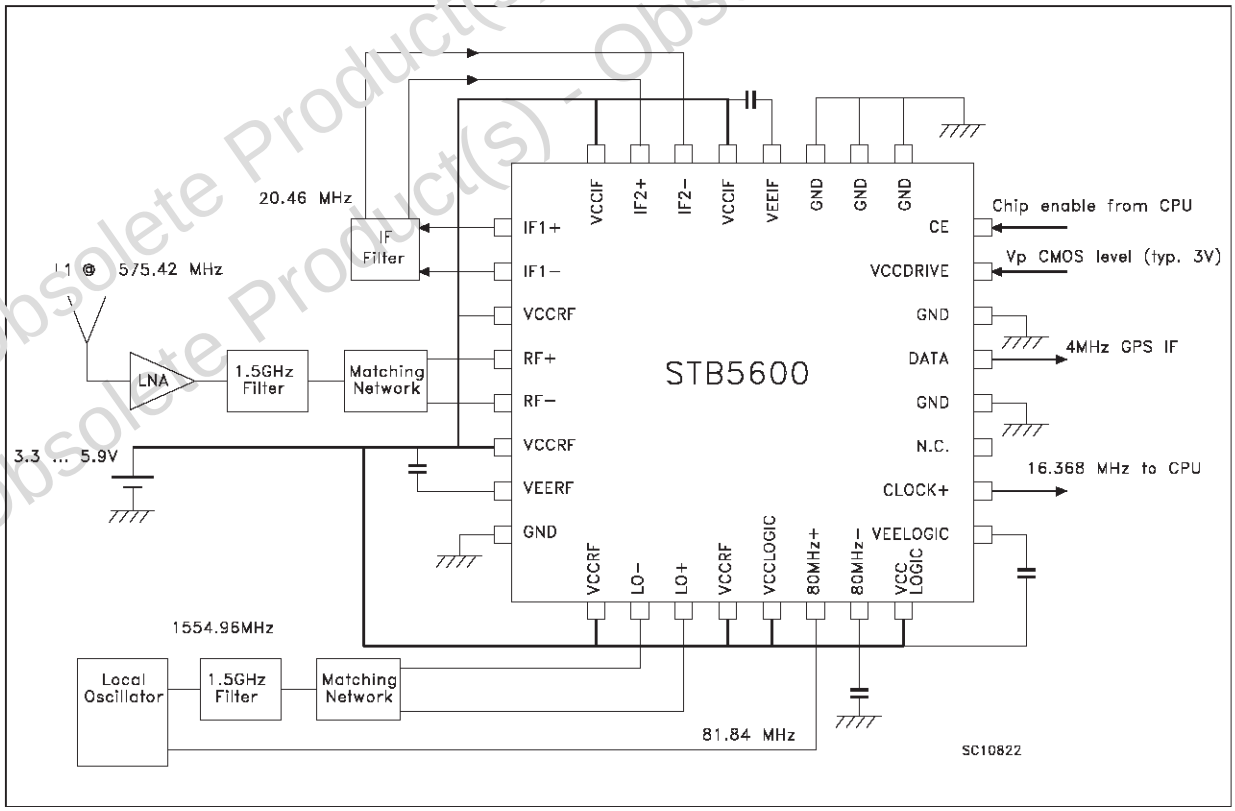

Obsolete Product(s) - Obsolete Product(s)

A.1 Matching Network

The **matching circuit** may be a 50 Ohm / 300 Ohm balun transformer (figure 2), but a more economical solution is a tuned match as shown below. A single 10nH inductor is optimal in cost, but may not meet the users tolerance requirements over spreads of silicon and pcb material, as it has only around 1pF tuning capacitance (2pF in series with 2pF inside the package).

Fig. 2 Matching Network with Balun

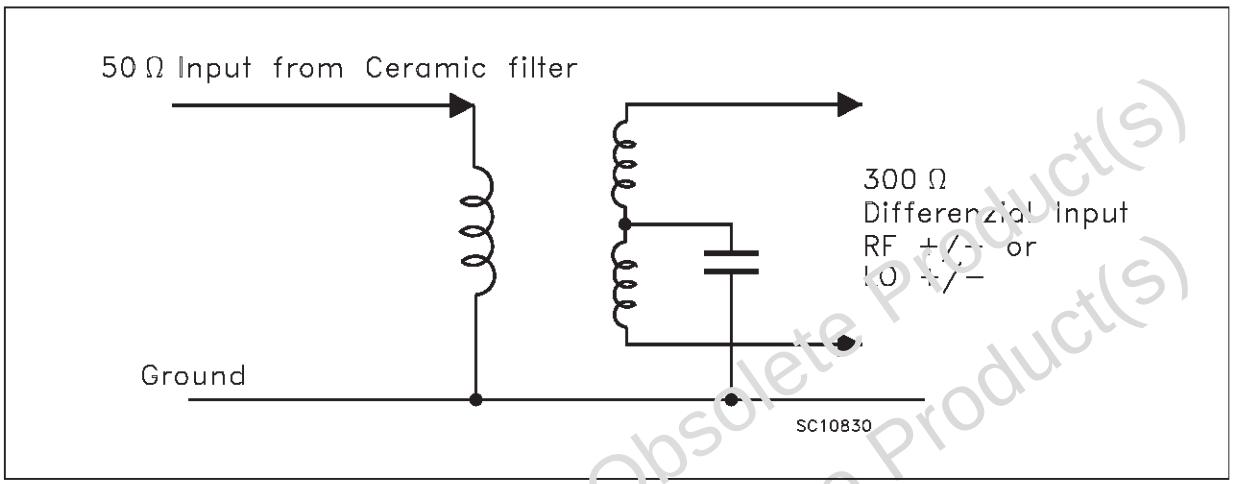

The first example (figure 3) increases the capacitance with a discrete capacitor, and uses a lower inductance value. Both examples assume that the ceramic filter is dc blocking, both input to output, and output to ground.

Fig. 3 Matching Network with two elements

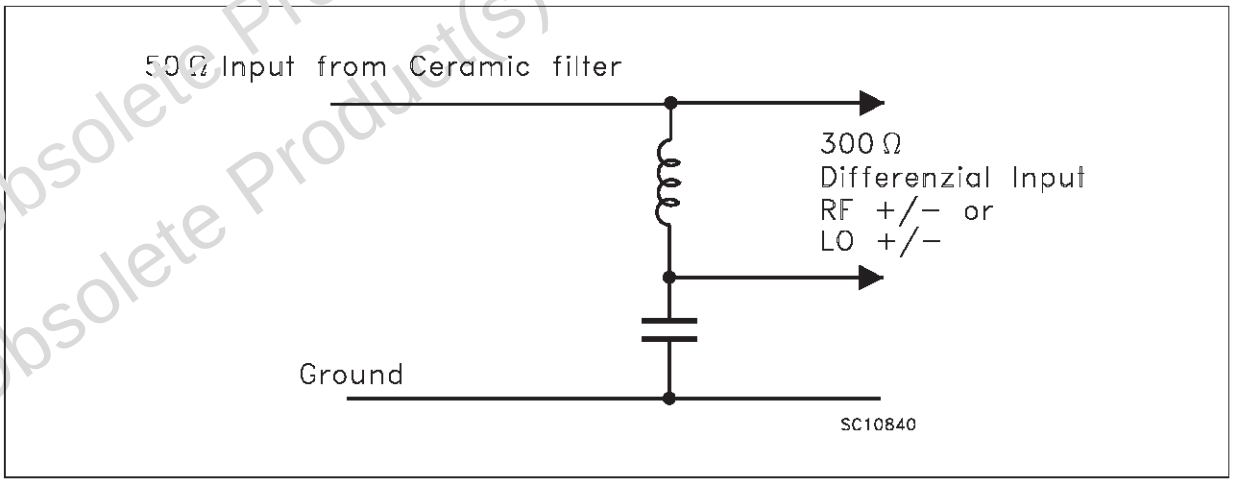

The second (figure 4) example allows optimum matching by rationing the capacitors appropriately to achieve voltage gain commensurate with the impedance translation. While it has a higher component count, it is the version most tolerant of component variations and board capacitance.

Obsolete Product(s) - Obsolete Product(s)
Obsolete Product(s) - Obsolete Product(s)

Fig. 4 Matching Network with four elements

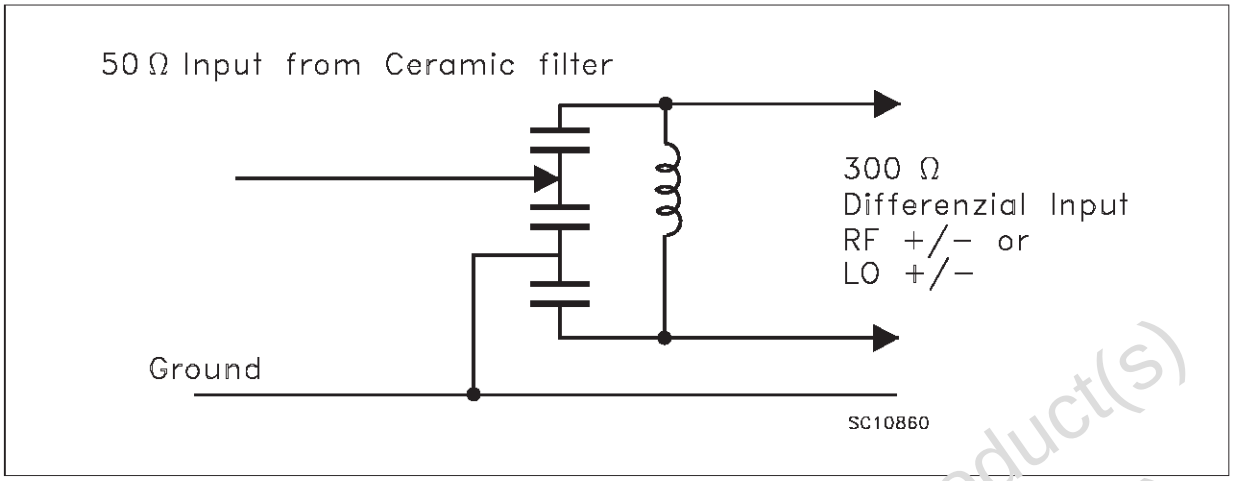

A.2 IF Filter

The recommended **IF filter** is shown in figure 5. The stop band of the filter is to reject the alias images around 12MHz, and around 28MHz, where it should have at least 15dBc rejection.

Note that the mixer output is low impedance, (70 Ohms), and the IF input is high impedance (15kOhms), so considerable voltage gain is achieved in the impedance matching filter.

The filter also sets the bandwidth of the receiver, using the load impedance with the L/C ratio to set the filter Q. If desired, an external resistor may be added in parallel to reduce the Q. Note that the bandwidth must be much wider than the 2MHz needed to pass the power of the GPS signal... it must maintain linear phase across the 2MHz, even at the extremes of component tolerance.

Fig. 5 IF Filter

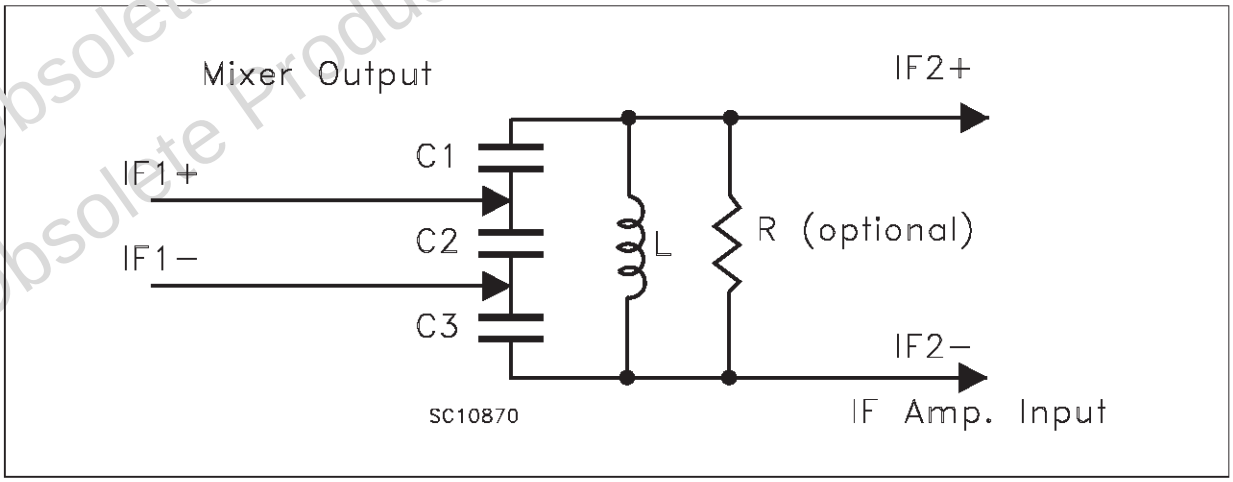

Obsolete Product(s) - Obsolete Product(s)

A.3 Reference Oscillator

The recommended dual output oscillator shown in figure 6 generates both the 81.84MHz signal that is divided down for the CPU 16.368MHz clock, but also the low amplitude 1555MHz first local oscillator signal .

Note that some 2 volts of the 82MHz signal is available, and the capacitive tap on the tank circuit is used to reduce the amplitude to prevent excessive radiation.

Note that the transistor must be a high frequency type, Ft of 8 GHz or greater, and that the collector inductor must have a self resonant frequency of 2.5GHz or higher.

Fig. 6 Reference Oscillator

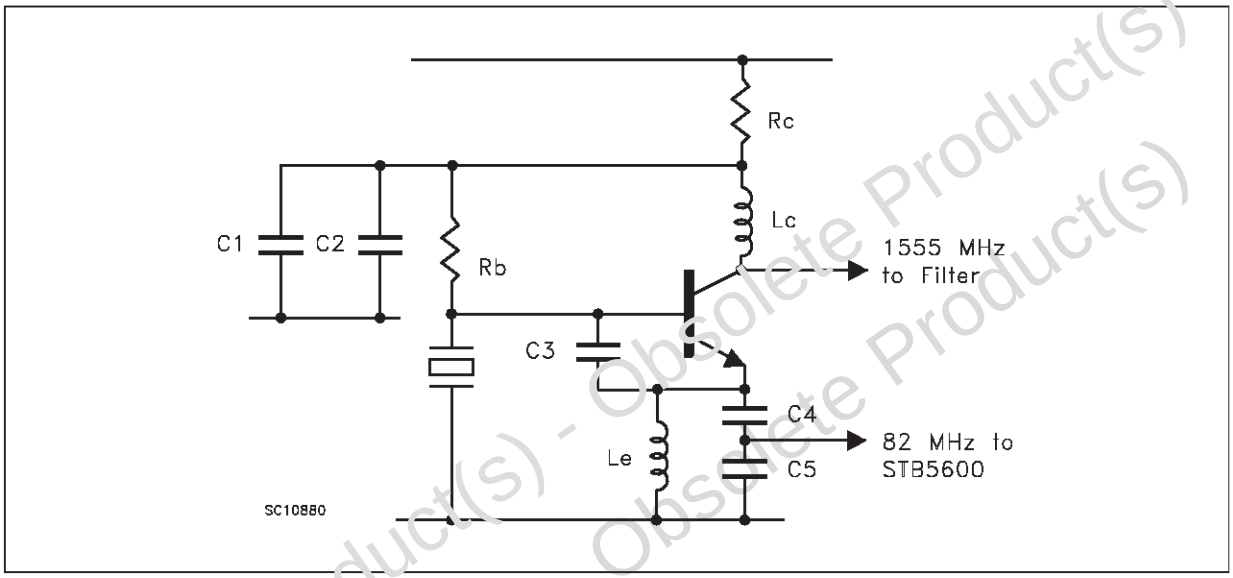

Obsolete Product(s) - Obsolete Product(s)
Obsolete Product(s) - Obsolete Product(s)

TQFP32 MECHANICAL DATA

DIM.	mm			inch		
	MIN.	TYP.	MAX.	MIN.	TYP.	MAX.
A			1.60			0.063
A1	0.05		0.15	0.002		0.006
A2	1.35	1.40	1.45	0.053	0.055	0.057
B	0.30	0.37	0.45	0.012	0.015	0.018
C	0.09		0.20	0.004		0.008
D		9.00			0.354	
D1		7.00			0.276	
D3		5.60			0.220	
e		0.80			0.031	
E		9.00			0.354	
E1		7.00			0.276	
E3		5.60			0.220	
L	0.45	0.60	0.75	0.018	0.024	0.030
L1		1.00			0.039	
K	0^o(min.), 7^o(max.)					

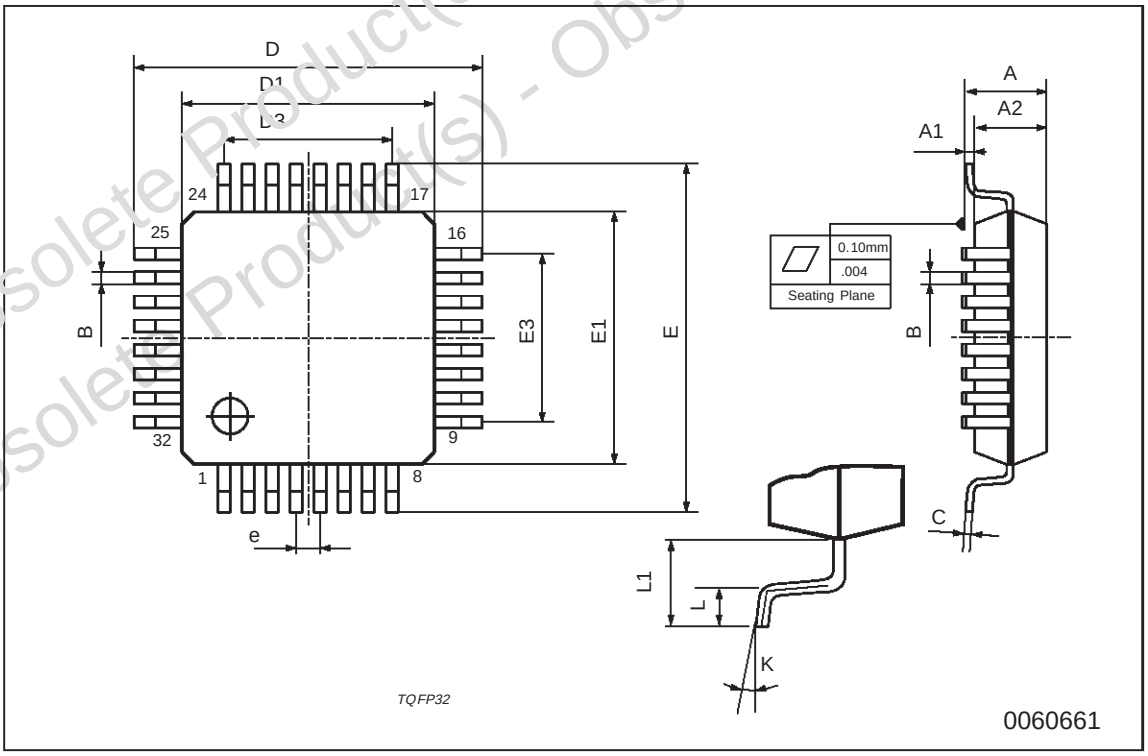

Obsolete Product(s) - Obsolete Product(s)
Obsolete Product(s) - Obsolete Product(s)

Obsolete Product(s) - Obsolete Product(s)
Obsolete Product(s) - Obsolete Product(s)

Information furnished is believed to be accurate and reliable. However, STMicroelectronics assumes no responsibility for the consequences of use of such information nor for any infringement of patents or other rights of third parties which may result from its use. No license is granted by implication or otherwise under any patent or patent rights of STMicroelectronics. Specification mentioned in this publication are subject to change without notice. This publication supersedes and replaces all information previously supplied. STMicroelectronics products are not authorized for use as critical components in life support devices or systems without express written approval of STMicroelectronics.

The ST logo is a registered trademark of STMicroelectronics

© 1998 STMicroelectronics – Printed in Italy – All Rights Reserved

STMicroelectronics GROUP OF COMPANIES

Australia - Brazil - Canada - China - France - Germany - Italy - Japan - Korea - Malaysia - Malta - Mexico - Morocco - The Netherlands - Singapore - Spain - Sweden - Switzerland - Taiwan - Thailand - United Kingdom - U.S.A.