STS4DNF60L

N-channel 60 V, 0.045 Ω, 4 A, SO-8 STripFET™ Power MOSFET

Features

Type	V_{DSS}	$R_{DS(on)}$	I_D
STS4DNF60L	60V	<0.055Ω	4A

- Standard outline for easy automated surface mount assembly
- Low threshold drive

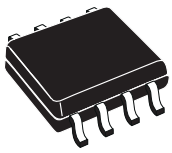

SO-8

Application

- Switching applications

Description

This Power MOSFET is the latest development of STMicroelectronics unique “single feature size” strip-based process. The resulting transistor shows extremely high packing density for low on-resistance, rugged avalanche characteristics and less critical alignment steps therefore a remarkable manufacturing reproducibility.

Figure 1. Internal schematic diagram

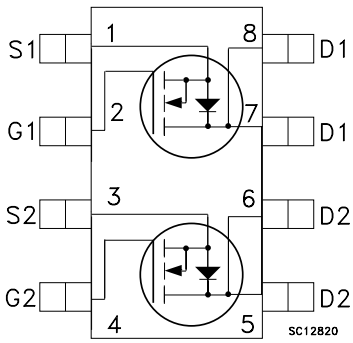

Table 1. Device summary

Order code	Marking	Package	Packaging
STS4DNF60L	4DF60L	SO-8	Tape & reel

Contents

1 Electrical ratings 3

2 Electrical characteristics 4

2.1 Electrical characteristics (curves) 6

3 Test circuits 8

4 Package mechanical data 9

5 Revision history 11

1 Electrical ratings

Table 2. Absolute maximum ratings

Symbol	Parameter	Value	Unit
V_{DS}	Drain-source voltage (V_{GS} = 0)	60	V
V_{GS}	Gate- source voltage	± 15	V
I_D	Drain current (continuous) at T_C = 25 °C	4	A
I_D	Drain current (continuous) at T_C = 100 °C	2.5	A
I_{DM} (1)	Drain current (pulsed)	16	A
P_{TOT}(2)	Total dissipation at T_C = 25 °C	2	W
E_{AS}(3)	Single pulse avalanche energy	80	mJ
T_j T_{stg}	Operating junction temperature Storage temperature	- 55 to 150	°C

1. Pulse width limited by safe operating area
2. P_{TOT}=1.6 W for single operation
3. Starting T_J = 25 °C, I_D = 4 A, V_{DD} = 30 V

Table 3. Thermal data

Symbol	Parameter	Value	Unit
Rthj-pcb	Thermal resistance junction-pcb D.O.(1)	62.5	°C/W

1. When mounted on inch² FR-4 board, 2 Oz Cu, t ≤ 10sec, dual operation

2 Electrical characteristics

(T_C = 25 °C unless otherwise specified)

Table 4. On /off states

Symbol	Parameter	Test conditions	Min.	Typ.	Max.	Unit
$V_{(BR)DSS}$	Drain-source breakdown voltage	I_D = 250 µA, V_{GS} = 0	60			V
I_{DSS}	Zero gate voltage drain current (V_{GS} = 0) V_{DS} = Max rating V_{DS} = Max rating, T_C=125 °C				1 10	µA µA
I_{GSS}	Gate-body leakage current (V_{DS} = 0)	V_{GS} = ± 15 V			± 100	nA
$V_{GS(th)}$	Gate threshold voltage	V_{DS} = V_{GS}, I_D = 250 µA	1	1.7	2.5	V
$R_{DS(on)}$	Static drain-source on resistance	V_{GS} = 10 V, I_D = 2 A V_{GS} = 4.5 V, I_D = 2 A		0.045 0.050	0.055 0.065	Ω Ω

Table 5. Dynamic

Symbol	Parameter	Test conditions	Min.	Typ.	Max.	Unit
g_{fs}	Forward transconductance	V_{DS} =25 V, I_D =2 A	-	25	-	S
C_{iss} C_{oss} C_{rss}	Input capacitance Output capacitance Reverse transfer capacitance	V_{DS} = 25 V, f = 1 MHz, V_{GS} = 0	-	1030 140 40	-	pF pF pF
Q_g Q_{gs} Q_{gd}	Total gate charge Gate-source charge Gate-drain charge	V_{DD} = 48 V, I_D = 4 A, V_{GS} = 4.5 V (see *Figure 13*)	-	15 4 4	-	nC nC nC

Table 6. Switching times

Symbol	Parameter	Test conditions	Min.	Typ.	Max.	Unit
$t_{d(on)}$ t_r	Turn-on delay time Rise time	V_{DD} = 30 V, I_D = 2.2 A, R_G = 4.7 Ω, V_{GS} = 10 V (see *Figure 12*)	-	15 28	-	ns ns
$t_{d(off)}$ t_f	Turn-off delay time Fall time		-	45 10	-	ns ns

Table 7. Source drain diode

Symbol	Parameter	Test conditions	Min.	Typ.	Max.	Unit
I_{SD} I_{SDM} (1)	Source-drain current Source-drain current (pulsed)		-		4 16	A A
V_{SD} (2)	Forward on voltage	I_{SD} = 4 A, V_{GS} = 0	-		1.2	V
t_{rr} Q_{rr} I_{RRM}	Reverse recovery time Reverse recovery charge Reverse recovery current	I_{SD} = 4 A, di/dt = 100 A/µs V_{DD} = 20 V (see *Figure 17*)	-	85 85 2		ns nC A

1. Pulse width limited by safe operating area
2. Pulsed: Pulse duration = 300 µs, duty cycle 1.5%

2.1 Electrical characteristics (curves)

Figure 2. Safe operating area

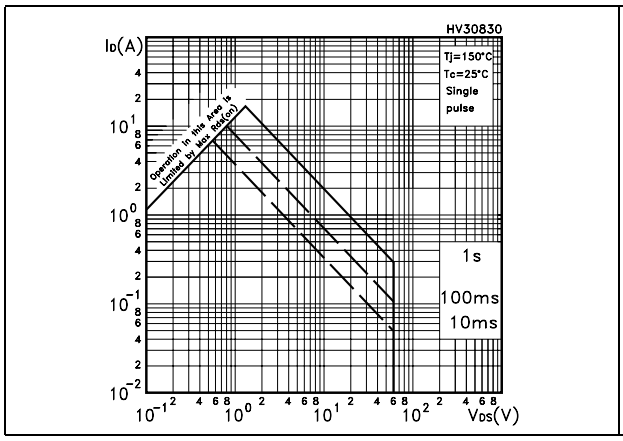

Figure 3. Thermal impedance

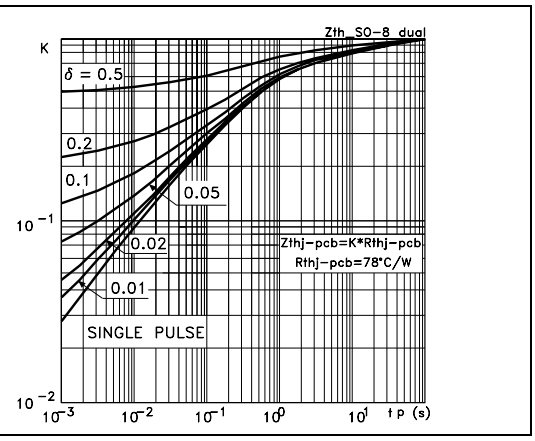

Figure 4. Output characteristics

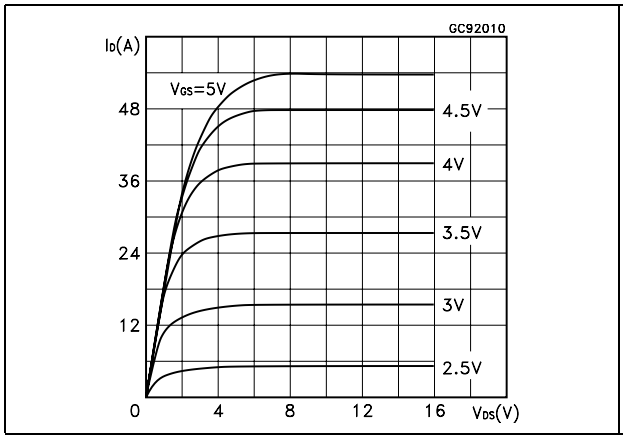

Figure 5. Transfer characteristics

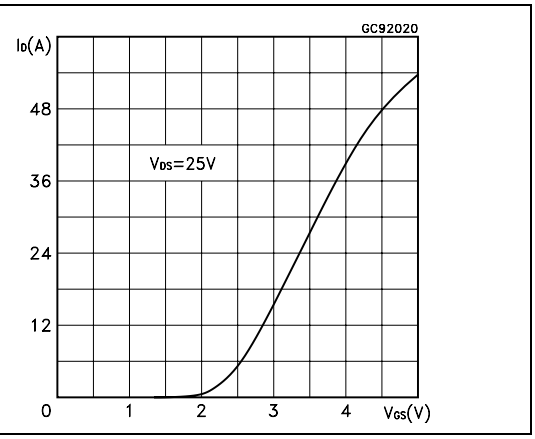

Figure 6. Source-drain diode forward characteristics

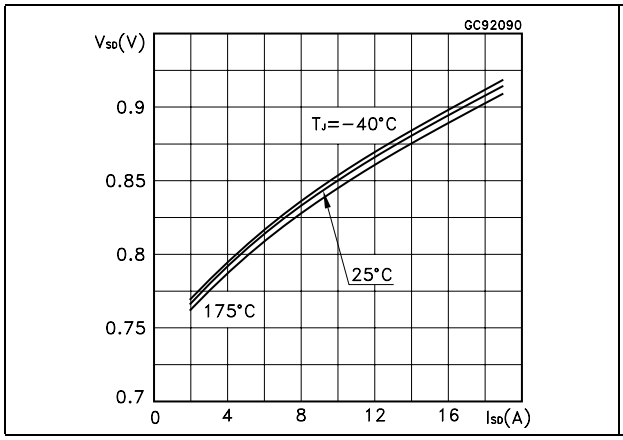

Figure 7. Static drain-source on resistance

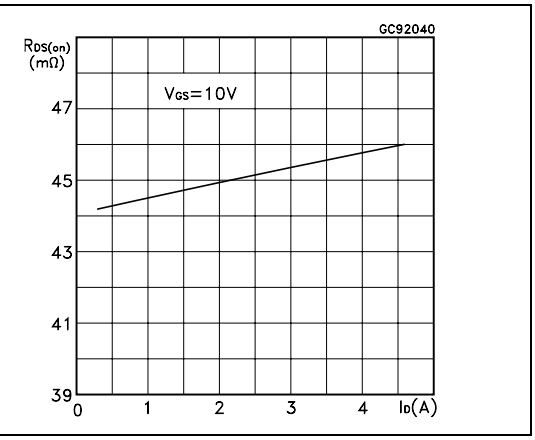

Figure 8. Gate charge vs gate-source voltage

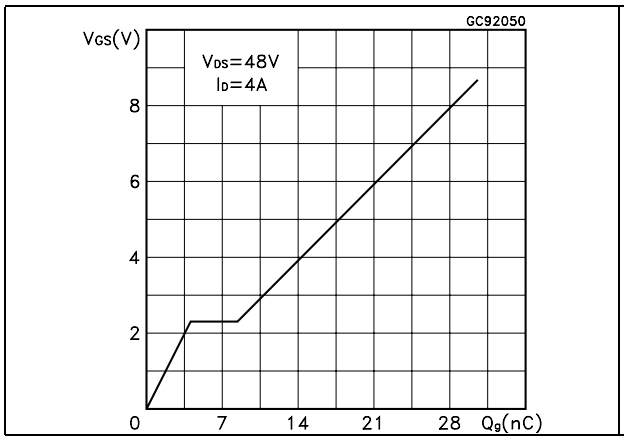

Figure 9. Capacitance variations

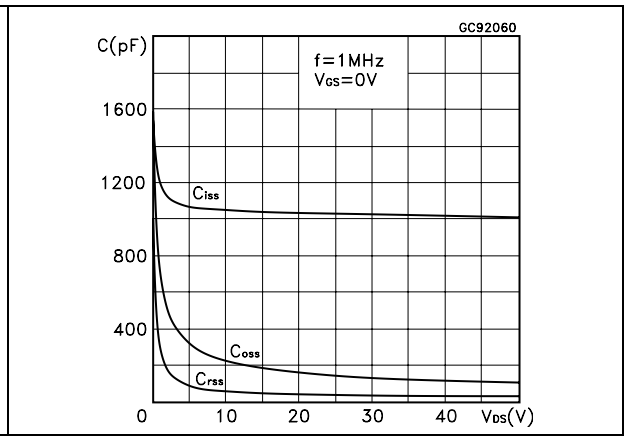

Figure 10. Normalized gate threshold voltage vs temperature

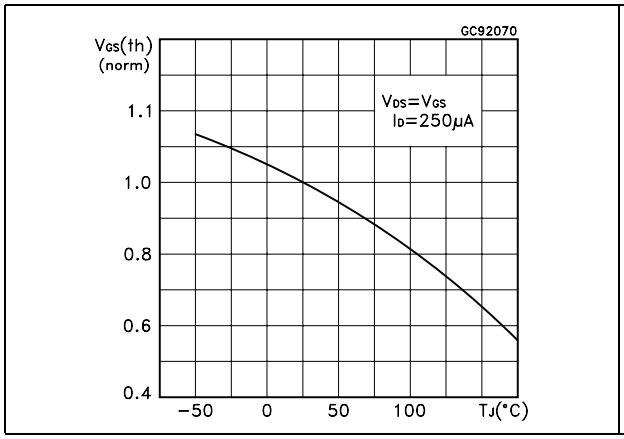

Figure 11. Normalized on resistance vs temperature

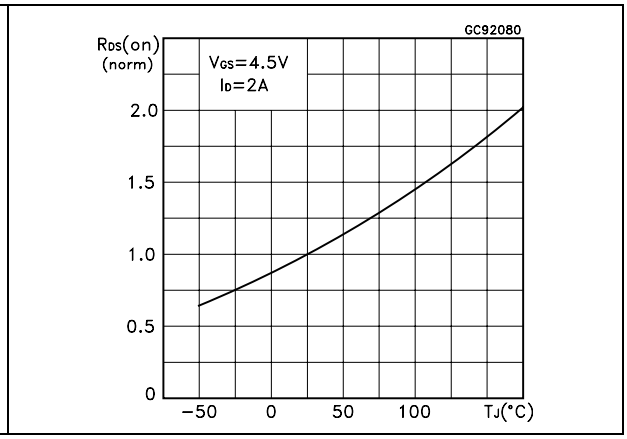

3 Test circuits

Figure 12. Switching times test circuit for resistive load

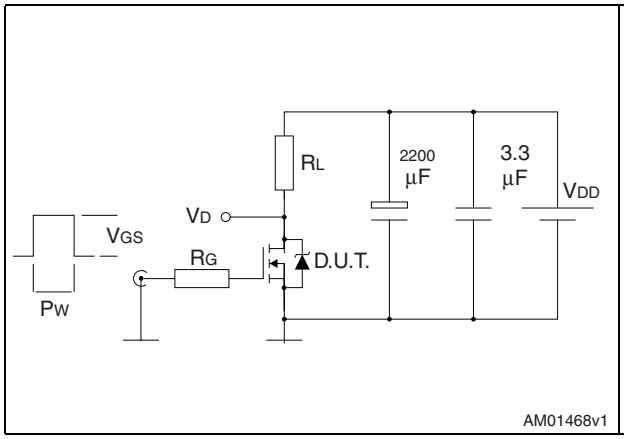

Figure 13. Gate charge test circuit

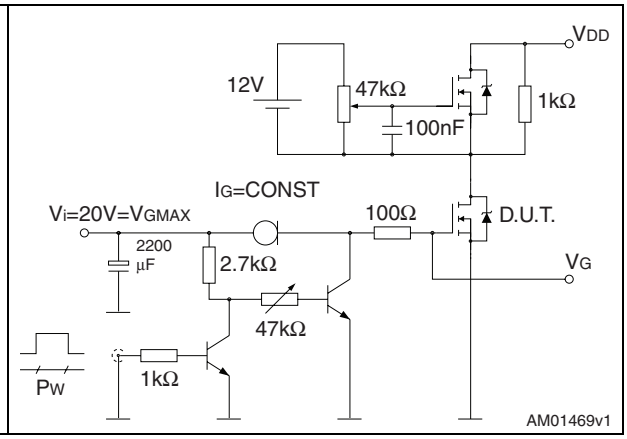

Figure 14. Test circuit for inductive load switching and diode recovery times

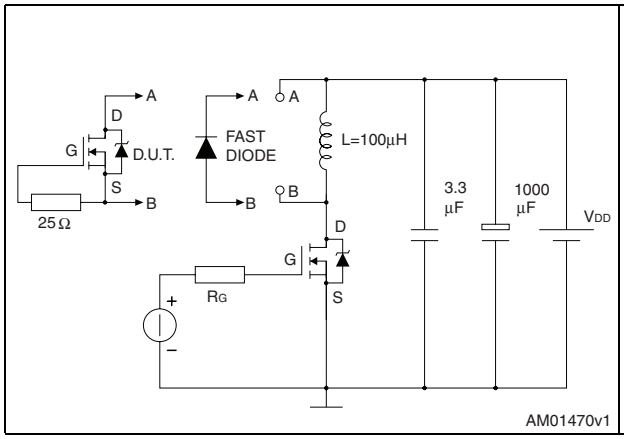

Figure 15. Unclamped Inductive load test circuit

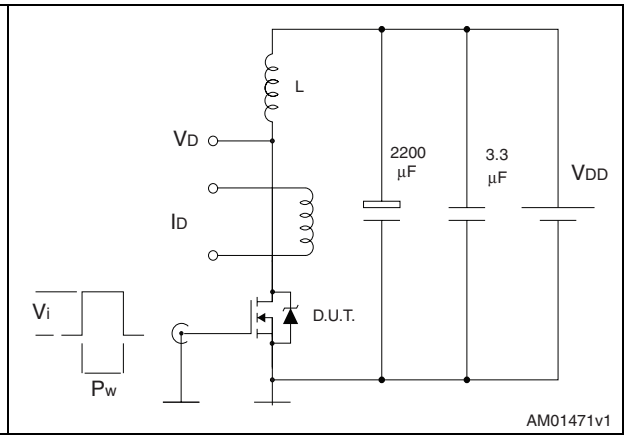

Figure 16. Unclamped inductive waveform

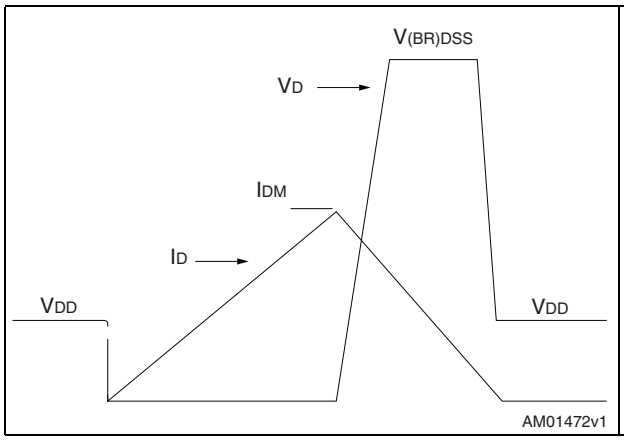

Figure 17. Switching time waveform

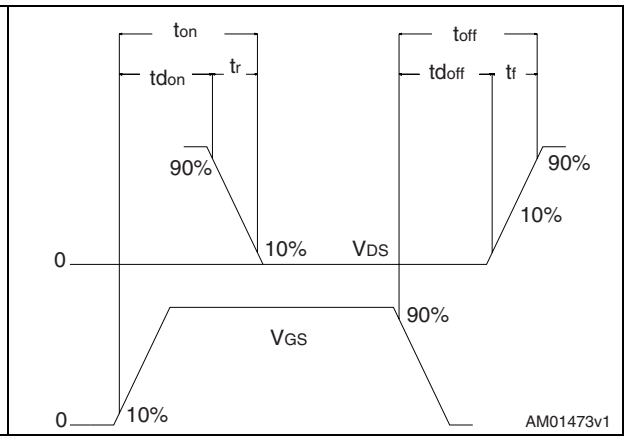

4 Package mechanical data

In order to meet environmental requirements, ST offers these devices in different grades of ECOPACK® packages, depending on their level of environmental compliance. ECOPACK® specifications, grade definitions and product status are available at: www.st.com. ECOPACK is an ST trademark.

SO-8 MECHANICAL DATA

DIM.	mm.			inch		
	MIN.	TYP	MAX.	MIN.	TYP.	MAX.
A			1.75			0.068
a1	0.1		0.25	0.003		0.009
a2			1.65			0.064
a3	0.65		0.85	0.025		0.033
b	0.35		0.48	0.013		0.018
b1	0.19		0.25	0.007		0.010
C	0.25		0.5	0.010		0.019
c1	45 (typ.)					
D	4.8		5.0	0.188		0.196
E	5.8		6.2	0.228		0.244
e		1.27			0.050	
e3		3.81			0.150	
F	3.8		4.0	0.14		0.157
L	0.4		1.27	0.015		0.050
M			0.6			0.023
S	8 (max.)					

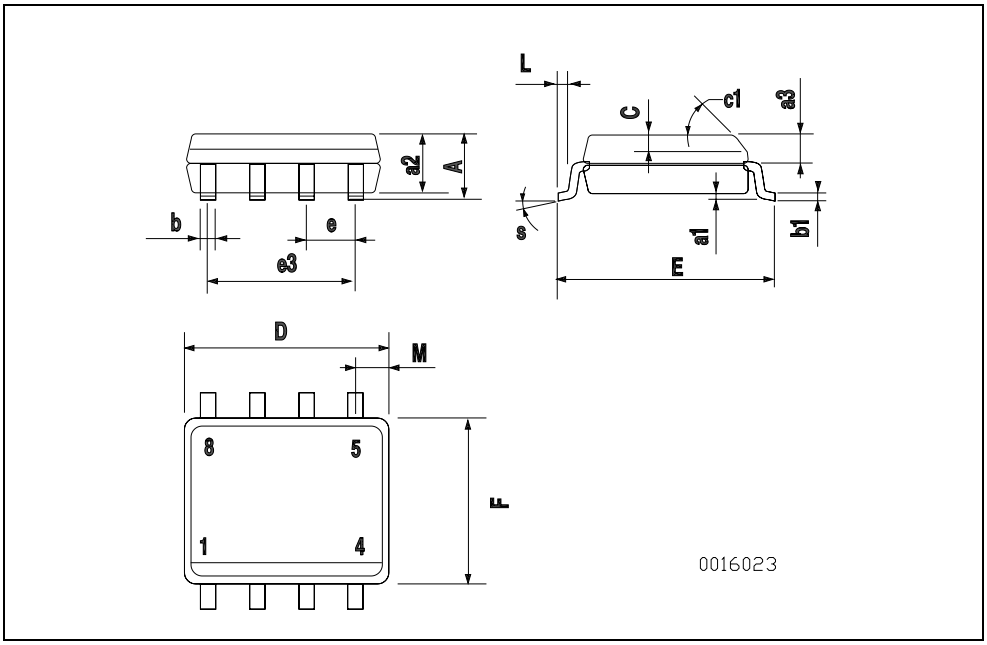

5 Revision history

Table 8. Document revision history

Date	Revision	Changes
30-May-2005	5	Initial electronic version
29-Mar-2006	6	Modified *Figure 2* and *Figure 3*
16-May-2006	7	Modified internal schematic diagram
29-Aug-2007	8	Marking has been updated
30-Mar-2010	9	Inserted E_{AS} value in *Table 2: Absolute maximum ratings*

Please Read Carefully:

Information in this document is provided solely in connection with ST products. STMicroelectronics NV and its subsidiaries (“ST”) reserve the right to make changes, corrections, modifications or improvements, to this document, and the products and services described herein at any time, without notice.

All ST products are sold pursuant to ST’s terms and conditions of sale.

Purchasers are solely responsible for the choice, selection and use of the ST products and services described herein, and ST assumes no liability whatsoever relating to the choice, selection or use of the ST products and services described herein.

No license, express or implied, by estoppel or otherwise, to any intellectual property rights is granted under this document. If any part of this document refers to any third party products or services it shall not be deemed a license grant by ST for the use of such third party products or services, or any intellectual property contained therein or considered as a warranty covering the use in any manner whatsoever of such third party products or services or any intellectual property contained therein.

UNLESS OTHERWISE SET FORTH IN ST’S TERMS AND CONDITIONS OF SALE ST DISCLAIMS ANY EXPRESS OR IMPLIED WARRANTY WITH RESPECT TO THE USE AND/OR SALE OF ST PRODUCTS INCLUDING WITHOUT LIMITATION IMPLIED WARRANTIES OF MERCHANTABILITY, FITNESS FOR A PARTICULAR PURPOSE (AND THEIR EQUIVALENTS UNDER THE LAWS OF ANY JURISDICTION), OR INFRINGEMENT OF ANY PATENT, COPYRIGHT OR OTHER INTELLECTUAL PROPERTY RIGHT.

UNLESS EXPRESSLY APPROVED IN WRITING BY AN AUTHORIZED ST REPRESENTATIVE, ST PRODUCTS ARE NOT RECOMMENDED, AUTHORIZED OR WARRANTED FOR USE IN MILITARY, AIR CRAFT, SPACE, LIFE SAVING, OR LIFE SUSTAINING APPLICATIONS, NOR IN PRODUCTS OR SYSTEMS WHERE FAILURE OR MALFUNCTION MAY RESULT IN PERSONAL INJURY, DEATH, OR SEVERE PROPERTY OR ENVIRONMENTAL DAMAGE. ST PRODUCTS WHICH ARE NOT SPECIFIED AS "AUTOMOTIVE GRADE" MAY ONLY BE USED IN AUTOMOTIVE APPLICATIONS AT USER’S OWN RISK.

Resale of ST products with provisions different from the statements and/or technical features set forth in this document shall immediately void any warranty granted by ST for the ST product or service described herein and shall not create or extend in any manner whatsoever, any liability of ST.

ST and the ST logo are trademarks or registered trademarks of ST in various countries.

Information in this document supersedes and replaces all information previously supplied.

The ST logo is a registered trademark of STMicroelectronics. All other names are the property of their respective owners.

© 2010 STMicroelectronics - All rights reserved

STMicroelectronics group of companies

Australia - Belgium - Brazil - Canada - China - Czech Republic - Finland - France - Germany - Hong Kong - India - Israel - Italy - Japan - Malaysia - Malta - Morocco - Philippines - Singapore - Spain - Sweden - Switzerland - United Kingdom - United States of America

www.st.com