STP60NE06L-16
STP60NE06L-16FP

N - CHANNEL 60V - 0.014Ω - 60A TO-220/TO-220FP STripFET™ POWER MOSFET

TYPE	V_{DSS}	$R_{DS(on)}$	I_D
STP60NE06L-16	60 V	< 0.016 Ω	60 A
STP60NE06L-16FP	60 V	< 0.016 Ω	35 A

- TYPICAL $R_{DS(on)}$ = 0.014 Ω
- AVALANCHE RUGGED TECHNOLOGY
- LOW GATE CHARGE
- HIGH CURRENT CAPABILITY
- 175 °C OPERATING TEMPERATURE
- LOW THRESHOLD DRIVE

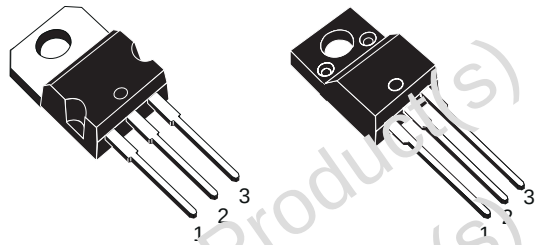

TO-220 TO-220FP

DESCRIPTION

This Power Mosfet is the latest development of STMicroelectronis unique "Single Feature Size™" strip-based process. The resulting transistor shows extremely high packing density for low on-resistance, rugged avalanche characteristics and less critical alignment steps therefore a remarkable manufacturing reproducibility.

APPLICATIONS

- HIGH CURRENT, HIGH SPEED SWITCHING
- SOLENOID AND RELAY DRIVERS
- DC-DC & DC-AC CONVERTERS
- AUTOMOTIVE ENVIRONMENT

INTERNAL SCHEMATIC DIAGRAM

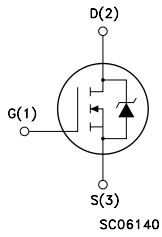

Obsolete Product(s) - Obsolete Product(s)
Obsolete Product(s) - Obsolete Product(s)

ABSOLUTE MAXIMUM RATINGS

Symbol	Parameter	Value		Unit
		STP60NE06L-16	STP60NE06L-16FP	
V_{DS}	Drain-source Voltage (V_{GS} = 0)	60		V
V_{DGR}	Drain- gate Voltage (R_{GS} = 20 kΩ)	60		V
V_{GS}	Gate-source Voltage	± 15		V
I_D	Drain Current (continuous) at T_c = 25 °C	60	35	A
I_D	Drain Current (continuous) at T_c = 100 °C	42	24	A
I_{DM}(•)	Drain Current (pulsed)	240	140	A
P_{tot}	Total Dissipation at T_c = 25 °C	150	45	W
	Derating Factor	1	0.3	W/°C
V_{ISO}	Insulation Withstand Voltage (DC)	—	2000	V
dv/dt	Peak Diode Recovery voltage slope	6		V/ns
T_{stg}	Storage Temperature	-65 to 175		°C
T_j	Max. Operating Junction Temperature	175		°C

(•) Pulse width limited by safe operating area

(1) I_{SD} ≤ 60 A, di/dt ≤ 300 A/µs, V_{DD} ≤ $V_{(BR)DSS}$, T_j ≤ T_{JMAX}

THERMAL DATA

			TO-220	TO-220FP	
$R_{thj\text{-}case}$	Thermal Resistance Junction-case	Max	0.94	2.7	°C/W
$R_{thj\text{-}amb}$	Thermal Resistance Junction-ambient	Max	62.5		°C/W
$R_{thc\text{-}sink}$	Thermal Resistance Case-sink	Typ	0.5		°C/W
T_l	Maximum Lead Temperature For Soldering Purpose		300		°C

AVALANCHE CHARACTERISTICS

Symbol	Parameter	Max Value	Unit
I_{AR}	Avalanche Current, Repetitive or Not-Repetitive (pulse width limited by T_j max)	60	A
E_{AS}	Single Pulse Avalanche Energy (starting T_j = 25 °C, $I_D = I_{AR}$, V_{DD} = 25V)	400	mJ

ELECTRICAL CHARACTERISTICS (T_{case} = 25 °C unless otherwise specified)

OFF

Symbol	Parameter	Test Conditions	Min.	Typ.	Max.	Unit
$V_{(BR)DSS}$	Drain-source Breakdown Voltage	I_D = 250 µA V_{GS} = 0	60			V
I_{DSS}	Zero Gate Voltage Drain Current (V_{GS} = 0)	V_{DS} = Max Rating V_{DS} = Max Rating T_c = 125 °C			1 10	µA µA
I_{GSS}	Gate-body Leakage Current (V_{DS} = 0)	V_{GS} = ± 15 V			± 100	nA

ON (*)

Symbol	Parameter	Test Conditions	Min.	Typ.	Max.	Unit
$V_{GS(th)}$	Gate Threshold Voltage	V_{DS} = V_{GS} I_D = 250 µA	1	1.6	2.5	V
$R_{DS(on)}$	Static Drain-source On Resistance	V_{GS} = 5V I_D = 30 A V_{GS} = 10V I_D = 30 A		0.014 0.012	0.016 0.014	Ω Ω
$I_{D(on)}$	On State Drain Current	V_{DS} > $I_{D(on)}$ x $R_{DS(on)max}$ V_{GS} = 10 V	60			A

DYNAMIC

Symbol	Parameter	Test Conditions	Min.	Typ.	Max.	Unit
g_{fs} (*)	Forward Transconductance	V_{DS} > $I_{D(on)}$ x $R_{DS(on)max}$ I_D =30 A		30		S
C_{iss} C_{oss} C_{rss}	Input Capacitance Output Capacitance Reverse Transfer Capacitance	V_{DS} = 25 V f = 1 MHz V_{GS} = 0		4150 590 150		pF pF pF

Obsolete Product(s) - Obsolete Product(s)

ELECTRICAL CHARACTERISTICS (continued)

SWITCHING ON

Symbol	Parameter	Test Conditions	Min.	Typ.	Max.	Unit
$t_{d(on)}$ t_r	Turn-on Delay Time Rise Time	V_{DD} = 30 V I_D = 30 A R_G = 4.7 Ω V_{GS} = 5 V (Resistive Load, see fig. 3)		50 155		ns ns
Q_g Q_{gs} Q_{gd}	Total Gate Charge Gate-Source Charge Gate-Drain Charge	V_{DD} = 40 V I_D = 60 A V_{GS} = 5 V		55 15 30	70	nC nC nC

SWITCHING OFF

Symbol	Parameter	Test Conditions	Min.	Typ.	Max.	Unit
$t_{d(off)}$ t_f	Turn-off Delay Time Fall Time	V_{DD} = 30 V I_D = 30 A R_G =4.7 Ω V_{GS} = 5 V (Resistive Load, see fig. 3)		125 25		ns ns
$t_{r(Voff)}$ t_f t_c	Off-voltage Rise Time Fall Time Cross-over Time	V_{DD} = 48 V I_D = 20 A R_G = 4.7 Ω V_{GS} = 5 V (Inductive Load, see fig. 5)		45 220 280		ns ns ns

SOURCE DRAIN DIODE

Symbol	Parameter	Test Conditions	Min.	Typ.	Max.	Unit
I_{SD} I_{SDM}(•)	Source-drain Current Source-drain Current (pulsed)				60 240	A A
V_{SD} (*)	Forward On Voltage	I_{SD} = 60 A V_{GS} = 0			1.5	V
t_{rr} Q_{rr} I_{RRM}	Reverse Recovery Time Reverse Recovery Charge Reverse Recovery Current	I_{SD} = 60 A di/dt = 100 A/µs V_{DD} = 30 V T_J = 150 °C (see test circuit, fig. 5)		85 300 7		ns µC A

(*) Pulsed: Pulse duration = 300 µs, duty cycle 1.5 %
(•) Pulse width limited by safe operating area

Safe Operating Area for TO-220

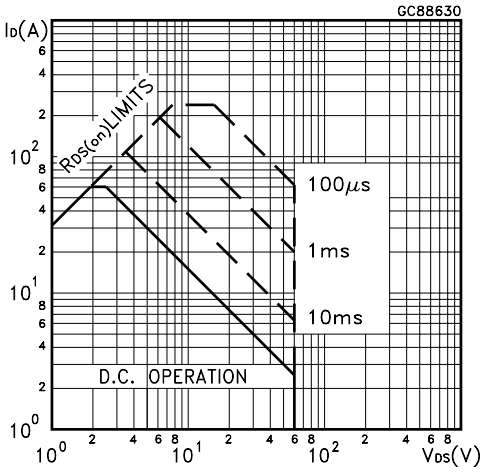

Safe Operating Area for TO-220FP

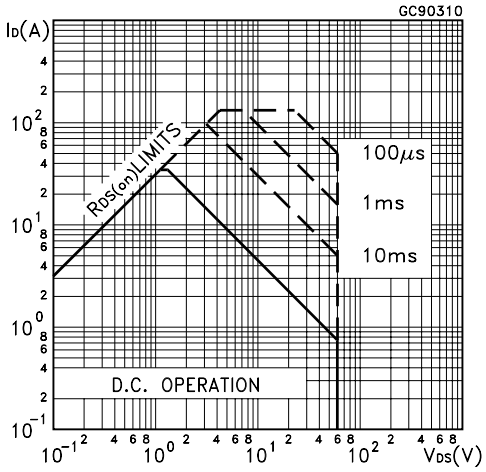

Obsolete Product(s) - Obsolete Product(s)

Thermal Impedance for TO-220

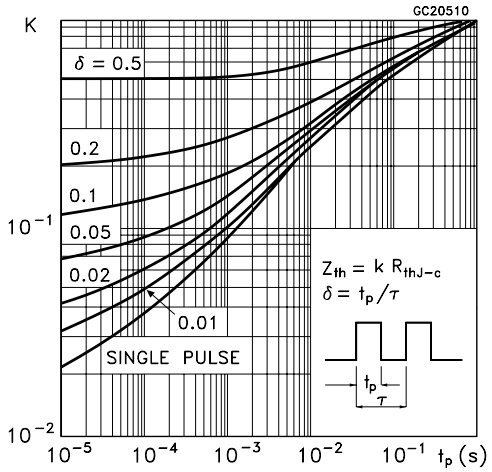

Thermal Impedance forTO-220FP

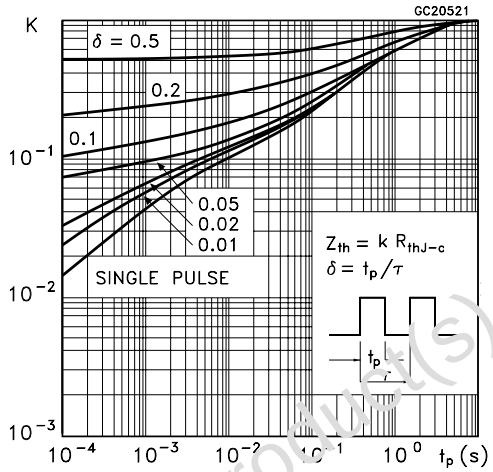

Output Characteristics

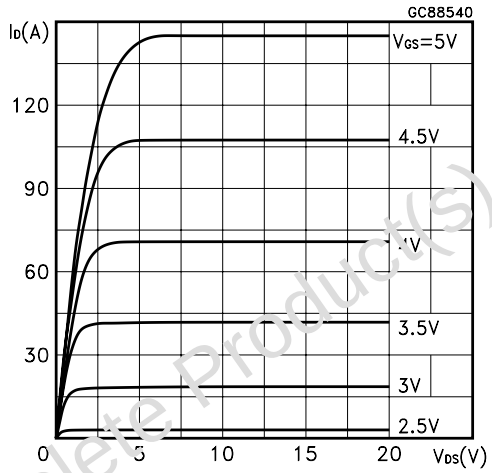

Transfer Characteristics

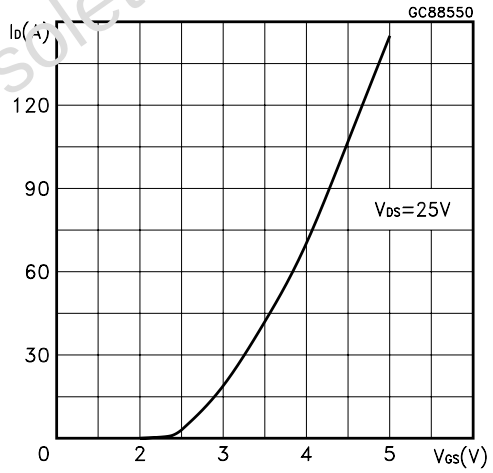

Transconductance

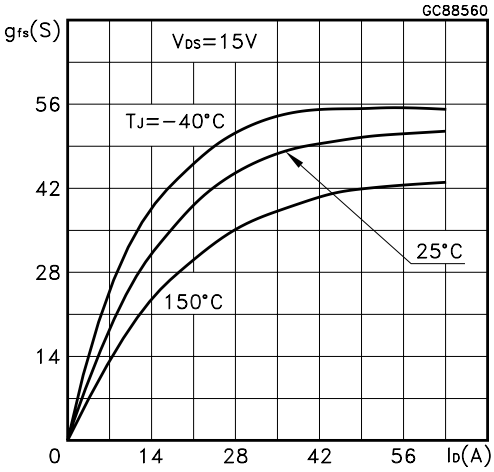

Static Drain-source On Resistance

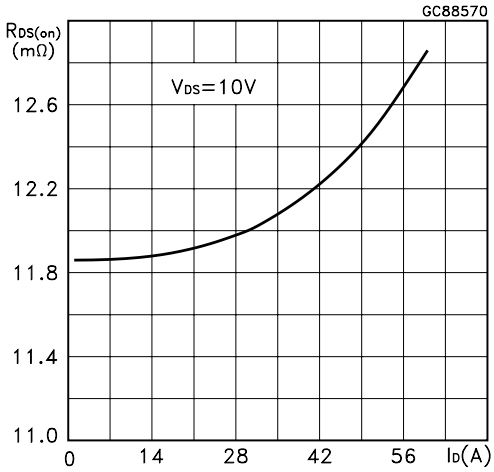

Obsolete Product(s) - Obsolete Product(s)

Gate Charge vs Gate-source Voltage

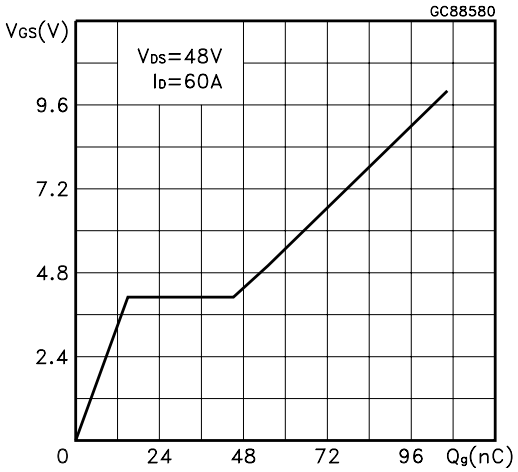

Capacitance Variations

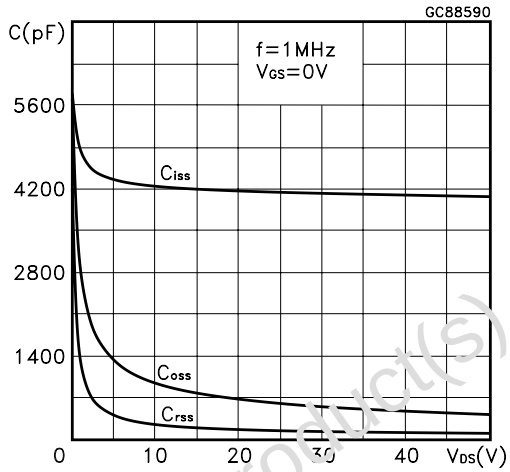

Normalized Gate Threshold Voltage vs Temperature

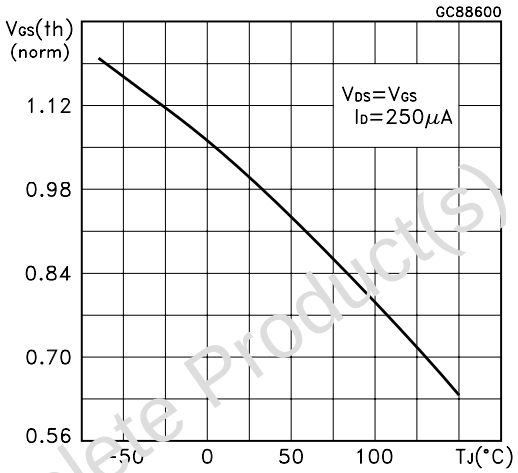

Normalized On Resistance vs Temperature

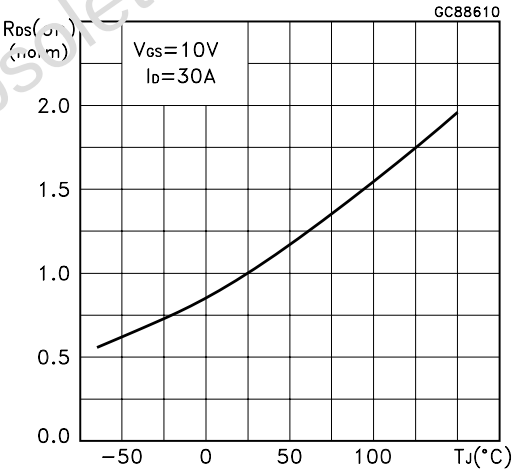

Source-drain Diode Forward Characteristics

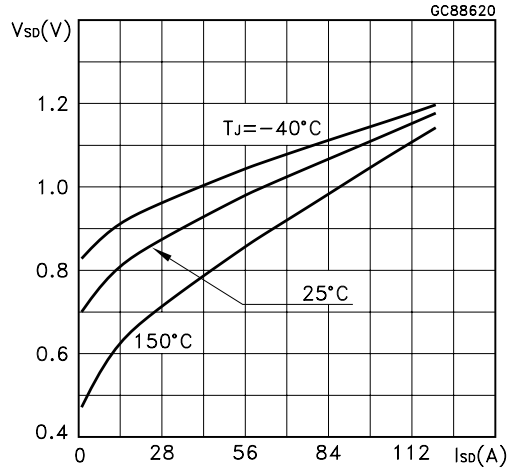

Obsolete Product(s) - Obsolete Product(s)

Fig. 1: Unclamped Inductive Load Test Circuit

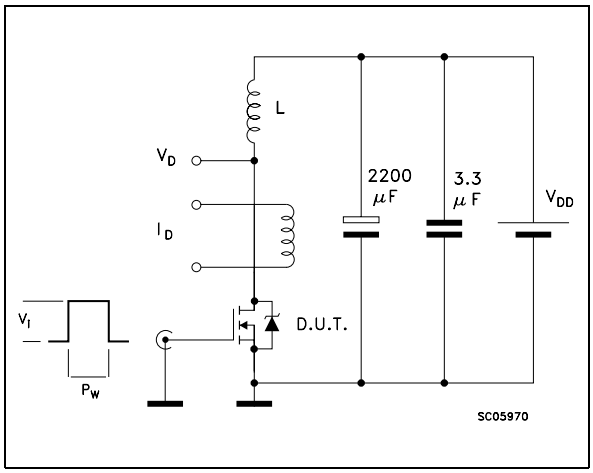

Fig. 2: Unclamped Inductive Waveform

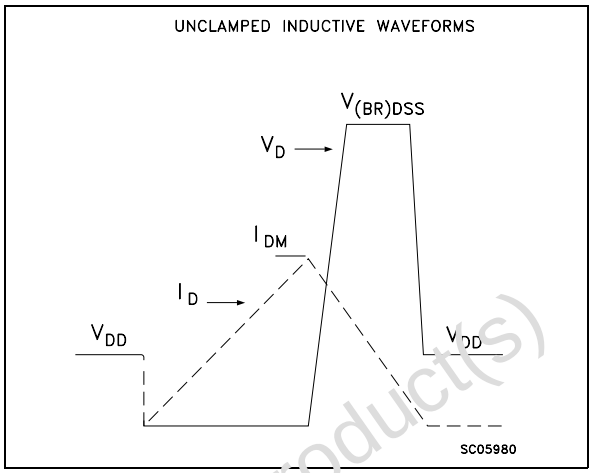

Fig. 3: Switching Times Test Circuits For Resistive Load

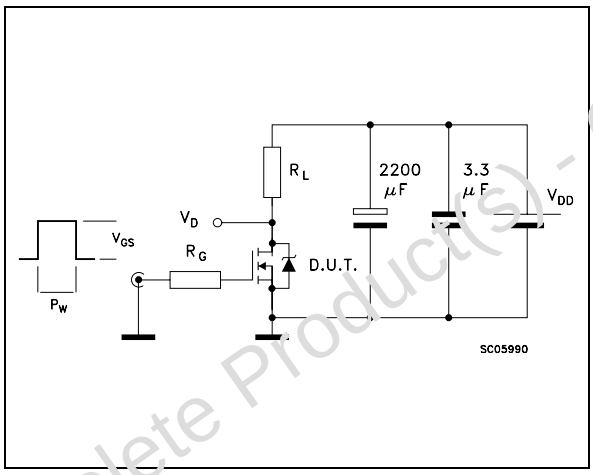

Fig. 4: Gate Charge Test Circuit

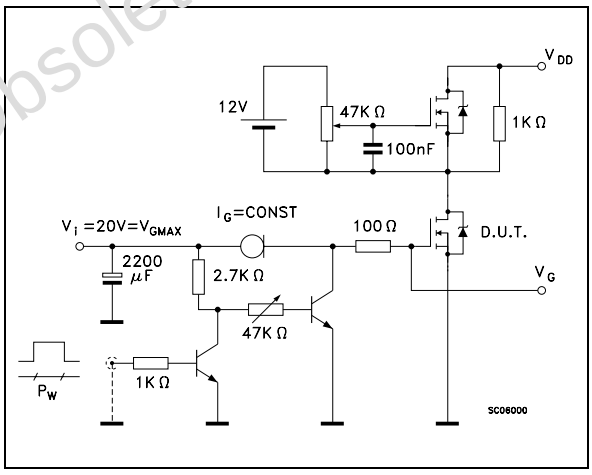

Fig. 5: Test Circuit For Inductive Load Switching And Diode Recovery Times

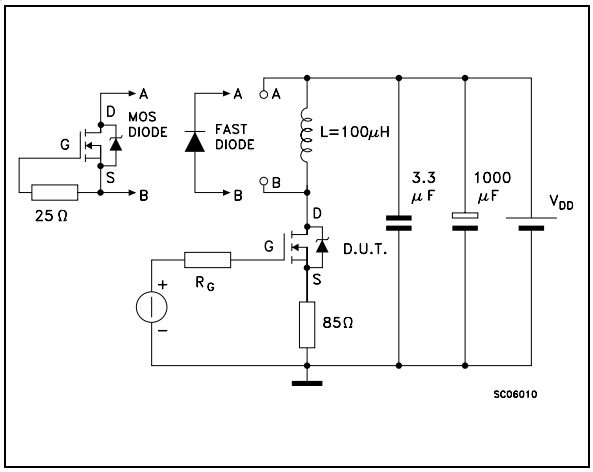

Obsolete Product(s) - Obsolete Product(s)

TO-220 MECHANICAL DATA

DIM.	mm			inch		
	MIN.	TYP.	MAX.	MIN.	TYP.	MAX.
A	4.40		4.60	0.173		0.181
C	1.23		1.32	0.048		0.051
D	2.40		2.72	0.094		0.107
D1		1.27			0.050	
E	0.49		0.70	0.019		0.027
F	0.61		0.88	0.024		0.034
F1	1.14		1.70	0.044		0.067
F2	1.14		1.70	0.044		0.067
G	4.95		5.15	0.194		0.203
G1	2.4		2.7	0.094		0.106
H2	10.0		10.40	0.393		0.409
L2		16.4			0.645	
L4	13.0		14.0	0.511		0.551
L5	2.65		2.95	0.104		0.116
L6	15.25		15.75	0.600		0.620
L7	6.2		6.6	0.244		0.260
L9	3.5		3.93	0.137		0.154
DIA.	3.75		3.85	0.147		0.151

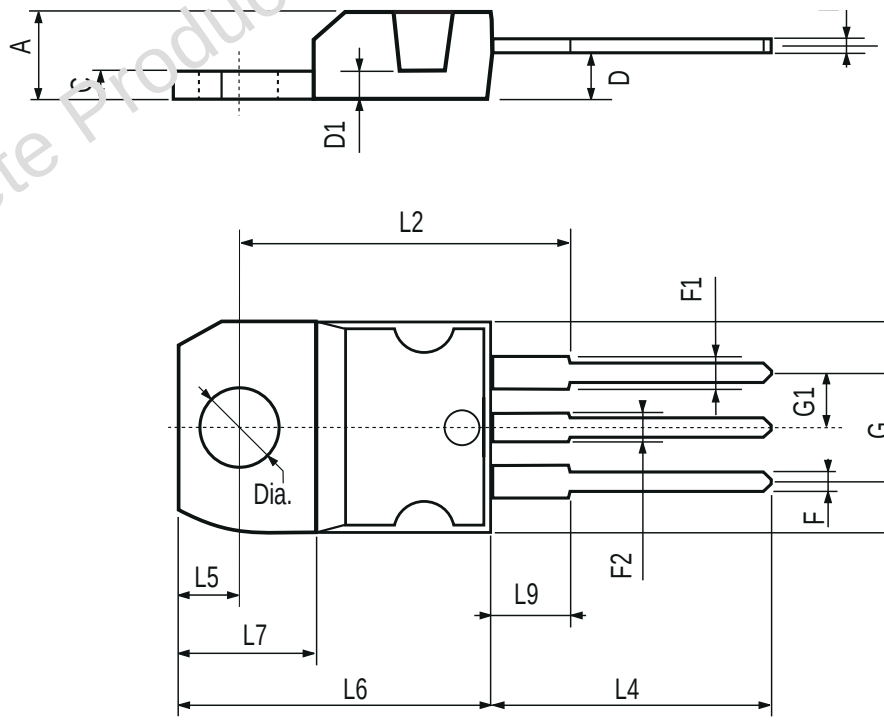

Obsolete Product(s) - Obsolete Product(s)

TO-220FP MECHANICAL DATA

DIM.	mm			inch		
	MIN.	TYP.	MAX.	MIN.	TYP.	MAX.
A	4.4		4.6	0.173		0.181
B	2.5		2.7	0.098		0.106
D	2.5		2.75	0.098		0.108
E	0.45		0.7	0.017		0.027
F	0.75		1	0.030		0.039
F1	1.15		1.7	0.045		0.067
F2	1.15		1.7	0.045		0.067
G	4.95		5.2	0.195		0.204
G1	2.4		2.7	0.094		0.106
H	10		10.4	0.393		0.409
L2		16			0.630	
L3	28.6		30.6	1.126		1.204
L4	9.8		10.6	0.385		0.417
L6	15.9		16.4	0.626		0.645
L7	9		9.3	0.354		0.366
Ø	3		3.2	0.118		0.126

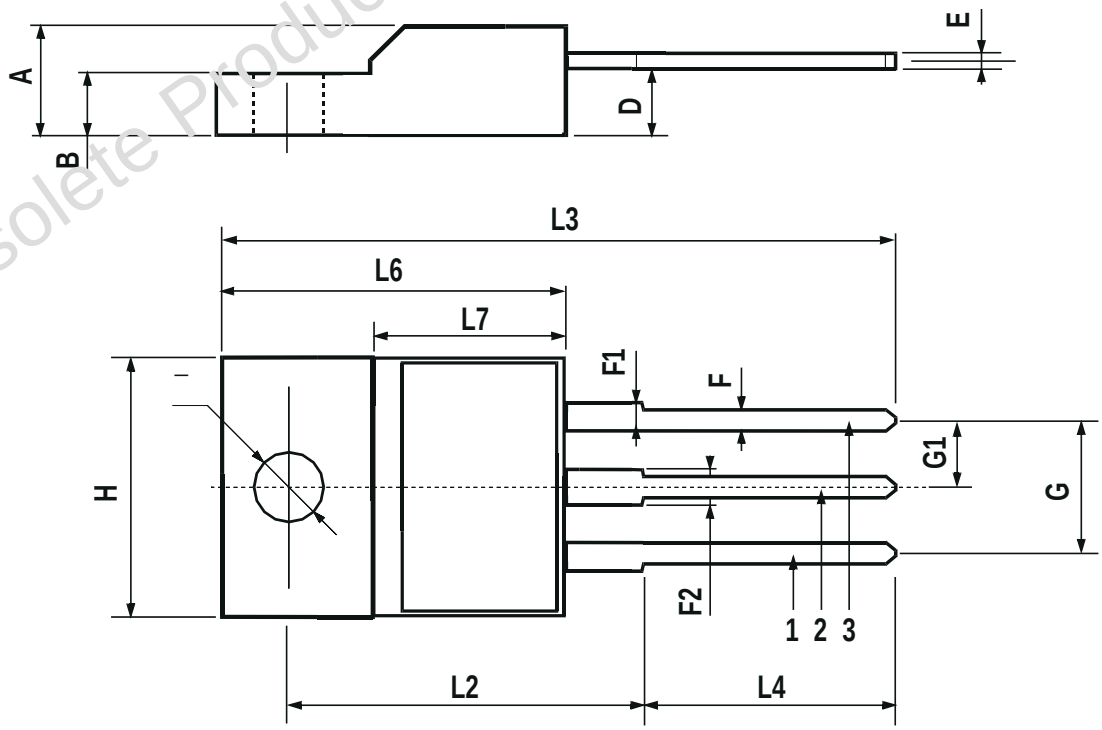

Obsolete Product(s) - Obsolete Product(s)

Obsolete Product(s) - Obsolete Product(s)

Information furnished is believed to be accurate and reliable. However, STMicroelectronics assumes no responsibility for the consequences of use of such information nor for any infringement of patents or other rights of third parties which may result from its use. No license is granted by implication or otherwise under any patent or patent rights of STMicroelectronics. Specification mentioned in this publication are subject to change without notice. This publication supersedes and replaces all information previously supplied. STMicroelectronics products are not authorized for use as critical components in life support devices or systems without express written approval of STMicroelectronics.

The ST logo is a trademark of STMicroelectronics

© 2000 STMicroelectronics – Printed in Italy – All Rights Reserved

STMicroelectronics GROUP OF COMPANIES

Australia - Brazil - China - Finland - France - Germany - Hong Kong - India - Italy - Japan - Malaysia - Malta - Morocco - Singapore - Spain - Sweden - Switzerland - United Kingdom - U.S.A.

http://www.st.com