STBV45

High voltage fast-switching NPN power transistor

Features

- High voltage capability
- Low spread of dynamic parameters
- Minimum lot-to-lot spread for reliable operation
- Very high switching speed

Applications

- Compact fluorescent lamps (CFLs)
- SMPS for battery charger

Description

The device is manufactured using high voltage multi epitaxial planar technology for high switching speeds and high voltage capability. It uses a cellular emitter structure with planar edge termination to enhance switching speeds while maintaining the wide RBSOA.
The STBV45G and STBV45G-AP are supplied using halogen-free molding compound.

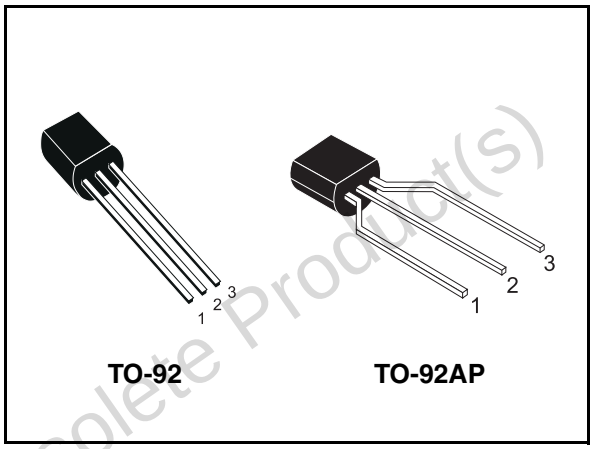

Figure 1. Internal schematic diagram

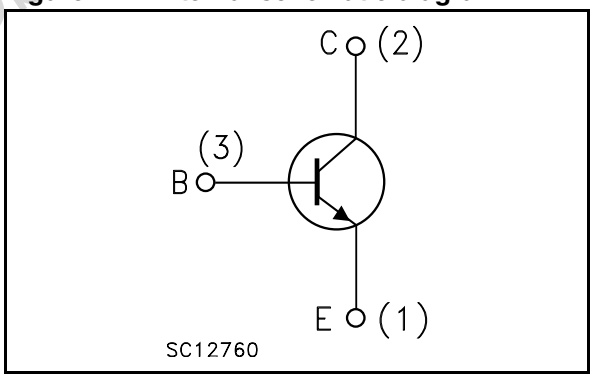

Obsolete Product(s) - Obsolete Product(s)

Table 1. Device summary

Order codes	Marking	Package	Packaging
STBV45	BV45	TO-92	Bulk
STBV45G	BV45G	TO-92	Bulk
STBV45-AP	BV45	TO-92AP	Ammopack
STBV45G-AP	BV45G	TO-92AP	Ammopack

1 Electrical ratings

Table 2. Absolute maximum rating

Symbol	Parameter	Value	Unit
V_{CES}	Collector-emitter voltage (V_{BE} = 0)	700	V
V_{CEO}	Collector-emitter voltage (I_B = 0)	400	V
V_{EBO}	Emitter-base voltage (I_C = 0)	9	V
I_C	Collector current	0.75	A
I_{CM}	Collector peak current (t_P < 5 ms)	1.5	A
I_B	Base current	0.4	A
I_{BM}	Base peak current (t_P < 5 ms)	0.75	A
P_{TOT}	Total dissipation at T_c = 25 °C	0.95	W
T_{stg}	Storage temperature	-65 to 150	°C
T_J	Max. operating junction temperature	150	

Table 3. Thermal data

Symbol	Parameter		Value	Unit
$R_{thj\text{-}case}$	Thermal resistance junction-case	max	131.6	°C/W

Obsolete Product(s) - Obsolete Product(s)

2 Electrical characteristics

(T_{case} = 25 °C; unless otherwise specified)

Table 4. Electrical characteristics

Symbol	Parameter	Test conditions	Min.	Typ.	Max.	Unit
I_{CES}	Collector cut-off current (V_{BE} = 0)	V_{CE} = 700 V			250	µA
I_{EBO}	Emitter cut-off current (I_C = 0)	V_{EB} = 9 V			1	mA
$V_{CEO(sus)}$ (1)	Collector-emitter sustaining voltage (I_B = 0)	I_C = 1 mA	400			V
$V_{CE(sat)}$ (1)	Collector-emitter saturation voltage	I_C = 0.2 A I_B = 40 mA I_C = 0.3 A I_B = 75 mA I_C = 0.4 A I_B = 135 mA		0.2 0.3 0.4	0.5 1 1.5	V V V
$V_{BE(sat)}$ (1)	Base-emitter saturation voltage	I_C = 0.2 A I_B = 40 mA I_C = 0.3 A I_B = 75 mA			1 1.2	V V
h_{FE}	DC current gain	I_C = 0.5 mA V_{CE} = 2 V I_C = 0.2 A V_{CE} = 5 V I_C = 0.4 A V_{CE} = 5 V	12 10 5		 30 20	
t_f	Inductive load Fall time	I_C = 0.2 A V_{clamp} = 300 V I_{B1} = -I_{B2} = 40 mA L = 3 mH *Figure 8.*		0.3		µs

1. Pulsed duration = 300 µs, duty cycle ≤ 1.5%

2.1 Electrical characteristics (curves)

Figure 2. Safe operating area

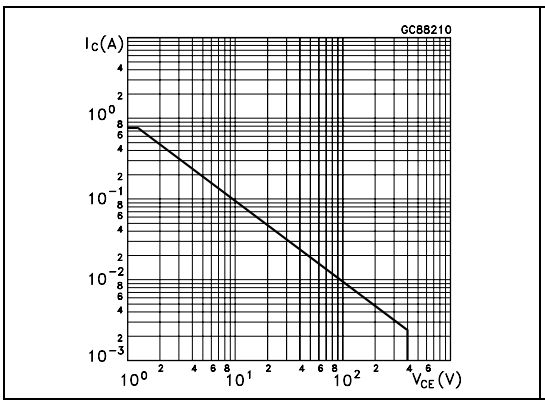

Figure 3. Derating curve

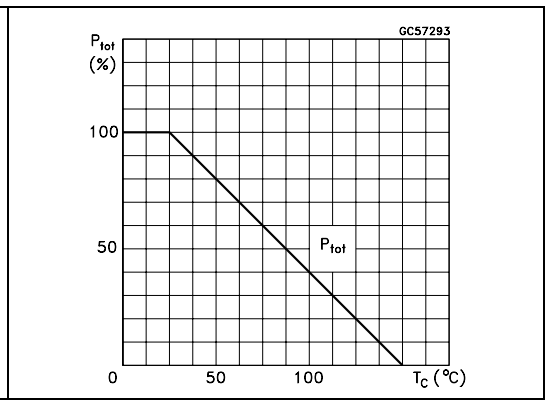

Obsolete Product(s) - Obsolete Product(s)

Figure 4. DC current gain

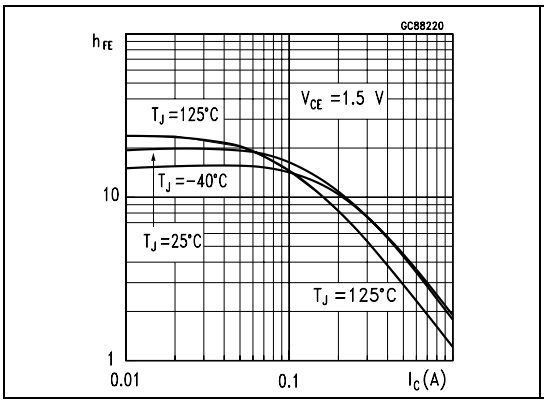

Figure 5. DC current gain

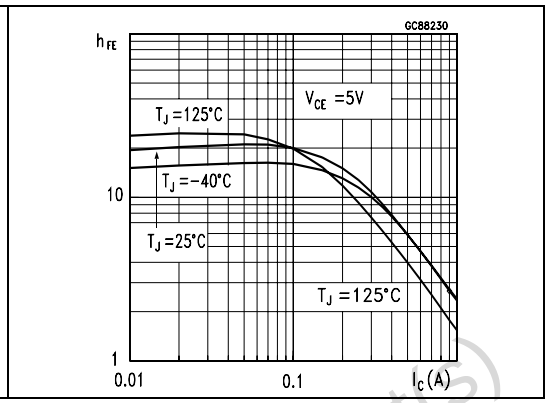

Figure 6. Collector-emitter saturation voltage

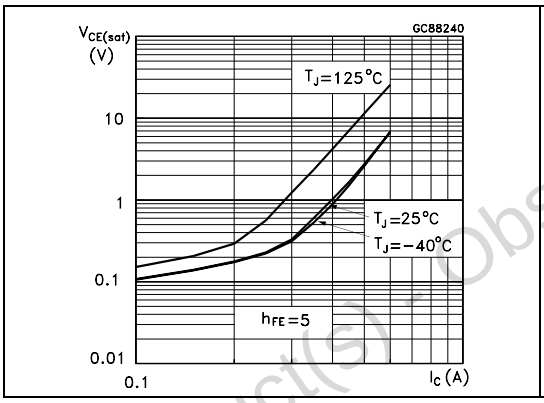

Figure 7. Base-emitter saturation voltage

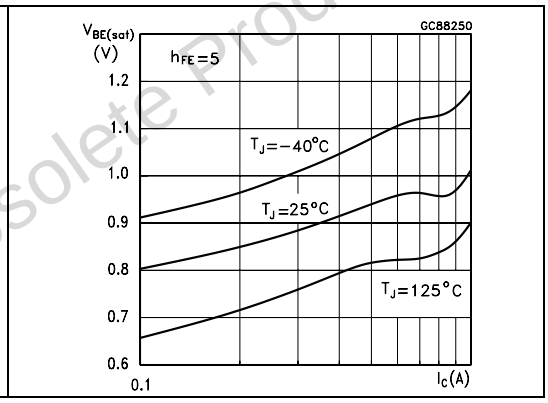

Obsolete Product(s) - Obsolete Product(s)

2.2 Test circuit

Figure 8. Inductive load switching test circuit

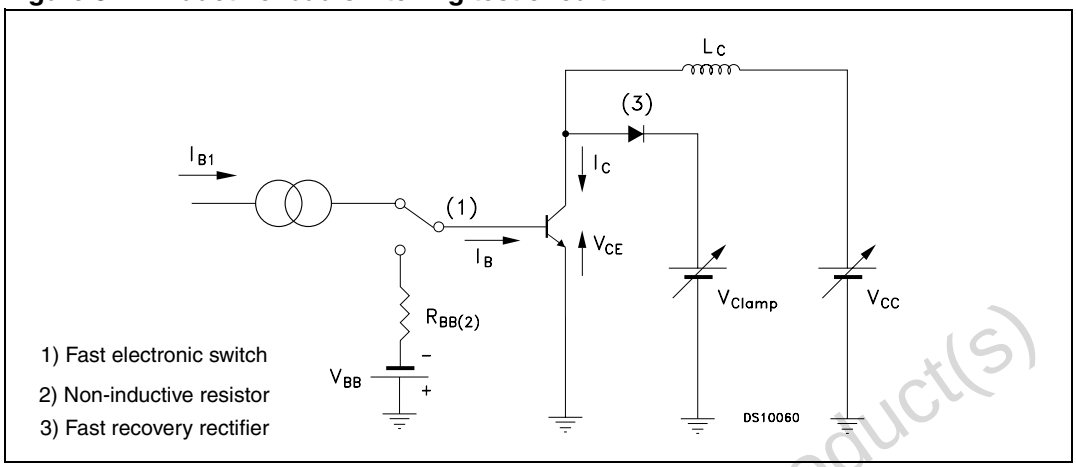

Obsolete Product(s) - Obsolete Product(s)

3 Package mechanical data

In order to meet environmental requirements, ST offers these devices in ECOPACK® packages. These packages have a lead-free second level interconnect . The category of second level interconnect is marked on the package and on the inner box label, in compliance with JEDEC Standard JESD97. The maximum ratings related to soldering conditions are also marked on the inner box label. ECOPACK is an ST trademark. ECOPACK specifications are available at: www.st.com

Obsolete Product(s) - Obsolete Product(s)

TO-92 bulk shipment mechanical data

DIM.	mm.		
	MIN.	TYP	MAX.
A	4.32		4.95
b	0.36		0.51
D	4.45		4.95
E	3.30		3.94
e	2.41		2.67
e1	1.14		1.40
L	12.70		15.49
R	2.16		2.41
S1	0.92		1.52
W	0.41		0.56
V		5°	

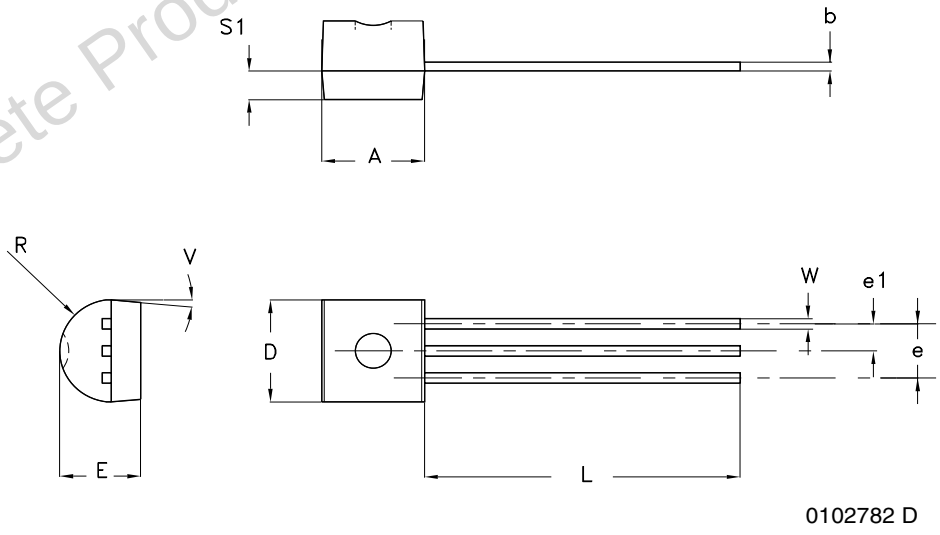

Obsolete Product(s) - Obsolete Product(s)

TO-92 ammopack shipment (suffix"-AP") mechanical data

Dim.	mm		
	Min	Typ	Max
A1			4.80
T			3.80
T1			1.60
T2			2.30
d			0.48
P0	12.50	12.70	12.90
P2	5.65	6.35	7.05
F1,F2	2.44	2.54	2.94
F3	4.98	5.08	5.48
delta H	-2.00		2.00
W	17.50	18.00	19.00
W0	5.70	6.00	6.30
W1	8.50	9.00	9.25
W2			0.50
H	18.50		20.50
H3	0.5	1	1.5
H0	15.50	16.00	16.50
H1			25.00
D0	3.80	4.00	4.20
t			0.90
L			11.00
l1	3.00		
delta P	-1.00		1.00

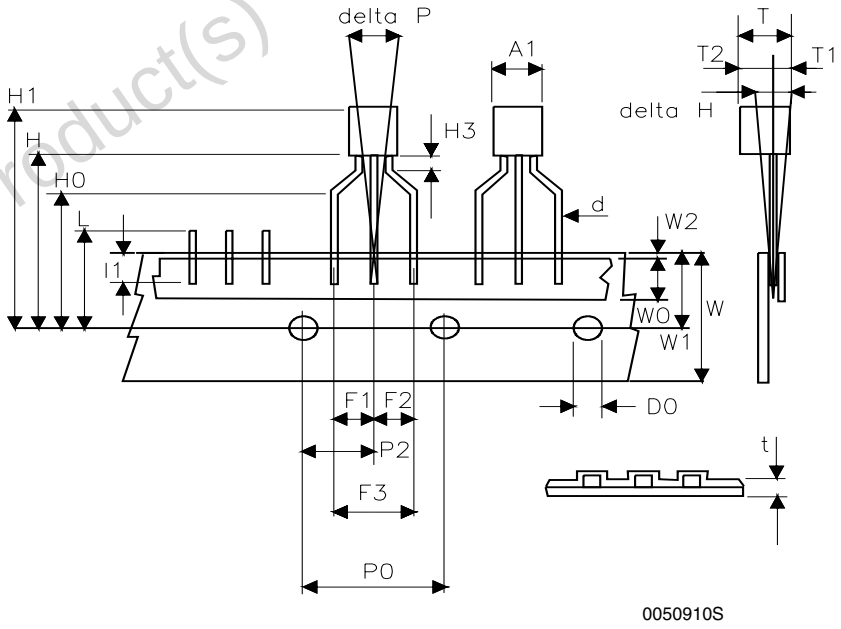

Obsolete Product(s) - Obsolete Product(s)

4 Revision history

Table 5. Document revision history

Date	Revision	Changes
13-Jul-2004	4	
03-Jul-2008	5	Added halogen-free molding compound package.
22-Oct-2008	6	Updated *Table 2 on page 2* and *Table 4 on page 3*

Obsolete Product(s) - Obsolete Product(s)

Please Read Carefully:

Information in this document is provided solely in connection with ST products. STMicroelectronics NV and its subsidiaries (“ST”) reserve the right to make changes, corrections, modifications or improvements, to this document, and the products and services described herein at any time, without notice.

All ST products are sold pursuant to ST’s terms and conditions of sale.

Purchasers are solely responsible for the choice, selection and use of the ST products and services described herein, and ST assumes no liability whatsoever relating to the choice, selection or use of the ST products and services described herein.

No license, express or implied, by estoppel or otherwise, to any intellectual property rights is granted under this document. If any part of this document refers to any third party products or services it shall not be deemed a license grant by ST for the use of such third party products or services, or any intellectual property contained therein or considered as a warranty covering the use in any manner whatsoever of such third party products or services or any intellectual property contained therein.

UNLESS OTHERWISE SET FORTH IN ST’S TERMS AND CONDITIONS OF SALE ST DISCLAIMS ANY EXPRESS OR IMPLIED WARRANTY WITH RESPECT TO THE USE AND/OR SALE OF ST PRODUCTS INCLUDING WITHOUT LIMITATION IMPLIED WARRANTIES OF MERCHANTABILITY, FITNESS FOR A PARTICULAR PURPOSE (AND THEIR EQUIVALENTS UNDER THE LAWS OF ANY JURISDICTION), OR INFRINGEMENT OF ANY PATENT, COPYRIGHT OR OTHER INTELLECTUAL PROPERTY RIGHT.

UNLESS EXPRESSLY APPROVED IN WRITING BY AN AUTHORIZED ST REPRESENTATIVE, ST PRODUCTS ARE NOT RECOMMENDED, AUTHORIZED OR WARRANTED FOR USE IN MILITARY, AIR CRAFT, SPACE, LIFE SAVING, OR LIFE SUSTAINING APPLICATIONS, NOR IN PRODUCTS OR SYSTEMS WHERE FAILURE OR MALFUNCTION MAY RESULT IN PERSONAL INJURY, DEATH, OR SEVERE PROPERTY OR ENVIRONMENTAL DAMAGE. ST PRODUCTS WHICH ARE NOT SPECIFIED AS "AUTOMOTIVE GRADE" MAY ONLY BE USED IN AUTOMOTIVE APPLICATIONS AT USER’S OWN RISK.

Resale of ST products with provisions different from the statements and/or technical features set forth in this document shall immediately void any warranty granted by ST for the ST product or service described herein and shall not create or extend in any manner whatsoever, any liability of ST.

Obsolete Product(s) - Obsolete Product(s)

ST and the ST logo are trademarks or registered trademarks of ST in various countries.

Information in this document supersedes and replaces all information previously supplied.

The ST logo is a registered trademark of STMicroelectronics. All other names are the property of their respective owners.

© 2008 STMicroelectronics - All rights reserved

STMicroelectronics group of companies

Australia - Belgium - Brazil - Canada - China - Czech Republic - Finland - France - Germany - Hong Kong - India - Israel - Italy - Japan - Malaysia - Malta - Morocco - Singapore - Spain - Sweden - Switzerland - United Kingdom - United States of America

www.st.com