STS4NF100

N-channel 100 V, 0.065 Ω typ., 4 A STripFET™ II Power MOSFET in SO-8 package

Datasheet – production data

Features

Order code	V_{DS}	$R_{DS(on)}$ max	I_D
STS4NF100	100 V	0.070 Ω	4 A

- Exceptional dv/dt capability
- 100 % avalanche tested
- Application oriented characterization

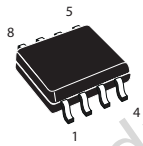

SO-8

Applications

- Switching applications

Description

This Power MOSFET has been developed using STMicroelectronics' unique STripFET process, which is specifically designed to minimize input capacitance and gate charge. This renders the device suitable for use as primary switch in advanced high-efficiency isolated DC-DC converters for telecom and computer applications, and applications with low gate charge driving requirements.

Figure 1. Internal schematic diagram

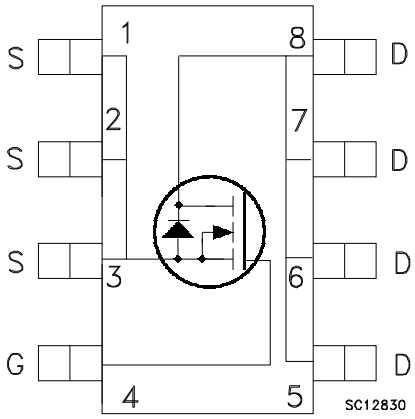

Obsolete Product(s) - Obsolete Product(s)

Table 1. Device summary

Order code	Marking	Package	Packaging
STS4NF100	4NF100	SO-8	Tape and reel

This is information on a product in full production. www.st.com

Contents

1 Electrical ratings 3

2 Electrical characteristics 4

2.1 Electrical characteristics (curves) 6

3 Test circuit 8

4 Package mechanical data 9

5 Revision history 12

Obsolete Product(s) - Obsolete Product(s)

1 Electrical ratings

Table 2. Absolute maximum ratings

Symbol	Parameter	Value	Unit
V_{DS}	Drain-source voltage	100	V
V_{GS}	Gate- source voltage	±20	V
I_D	Drain current (continuous) at T_C = 25°C	4	A
I_D	Drain current (continuous) at T_C = 100°C	2.5	A
I_{DM} (1)	Drain current (pulsed)	16	A
P_{TOT}	Total dissipation at T_{amb} = 25°C	2.5	W
T_J	Max. operating junction temperature	-55 to 150	°C
T_{stg}	Storage temperature		°C

1. Pulse width limited by safe operating area

Table 3. Thermal data

Symbol	Parameter	Value	Unit
R_{thj-a}	Thermal resistance junction-ambient max (1)	50	°C/W

1. Mounted on FR-4 board (t 10 sec.)

Obsolete Product(s) - Obsolete Product(s)

2 Electrical characteristics

(T_{CASE}=25°C unless otherwise specified)

Table 4. On/off states

Symbol	Parameter	Test conditions	Min.	Typ.	Max.	Unit
$V_{(BR)DSS}$	Drain-source Breakdown voltage	I_D = 250 µA, V_{GS} = 0	100			V
I_{DSS}	Zero gate voltage drain current (V_{GS} = 0)	V_{DS} = 100 V V_{DS}= 100 V, T_C=125 °C			1 10	µA µA
I_{GSS}	Gate-body leakage current (V_{DS} = 0)	V_{GS} = ± 20 V			±100	nA
$V_{GS(th)}$	Gate threshold voltage	V_{DS} = V_{GS}, I_D = 250 µA	2	3	4	V
$R_{DS(on)}$	Static drain-source on-resistance	V_{GS} = 10 V, I_D = 2 A		0.065	0.070	Ω

Table 5. Dynamic

Symbol	Parameter	Test conditions	Min.	Typ.	Max.	Unit
g_{fs} (1)	Forward transconductance	V_{DS} > $I_{D(on)}$x$R_{DS(on)max}$ I_D= 2 A	-	10		S
C_{iss}	Input capacitance	V_{DS} = 25 V, f = 1 MHz, V_{GS} = 0	-	870		pF
C_{oss}	Output capacitance		-	125		pF
C_{rss}	Reverse transfer capacitance		-	52		pF
Q_g	Total gate charge	V_{DD} = 80 V, I_D = 4 A, V_{GS} = 10 V	-	30	41	nC
Q_{gs}	Gate-source charge		-	6		nC
Q_{gd}	Gate-drain charge		-	10		nC

1. Pulsed: Pulse duration = 300 µs, duty cycle 1.5 .

Table 6. Switching times

Symbol	Parameter	Test conditions	Min.	Typ.	Max.	Unit
$t_{d(on)}$ t_r	Turn-on delay time rise time	V_{DD}=50 V, I_D=4 A, R_G=4.7 Ω, V_{GS}= 10 V (see *Figure 14*)	-	58 45	-	ns ns
$t_{d(off)}$ t_f	Turn-off delay time fall time	V_{DD} = 50 V, I_D = 4 A R_G=4.7 Ω, V_{GS} = 10 V (see *Figure 14*)	-	49 17	-	ns ns

Obsolete Product(s) - Obsolete Product(s)

Table 7. Source drain diode

Symbol	Parameter	Test conditions	Min	Typ.	Max.	Unit
I_{SD}	Source-drain current		-		4	A
I_{SDM} (1)	Source-drain current (pulsed)		-		16	A
V_{SD} (2)	Forward on voltage	I_{SD} = 4 A, V_{GS} = 0	-		1.2	V
t_{rr} Q_{rr} I_{RRM}	Reverse recovery time Reverse recovery charge Reverse recovery current	I_{SD} = 4 A, V_{DD} = 30 V di/dt = 100 A/µs, T_j = 150 °C (see *Figure 15*)	-	100 375 7.5		ns nC A

1. Pulse width limited by safe operating area.
2. Pulsed: Pulse duration = 300 µs, duty cycle 1.5 %

Obsolete Product(s) - Obsolete Product(s)

2.1 Electrical characteristics (curves)

Figure 2. Safe operating area

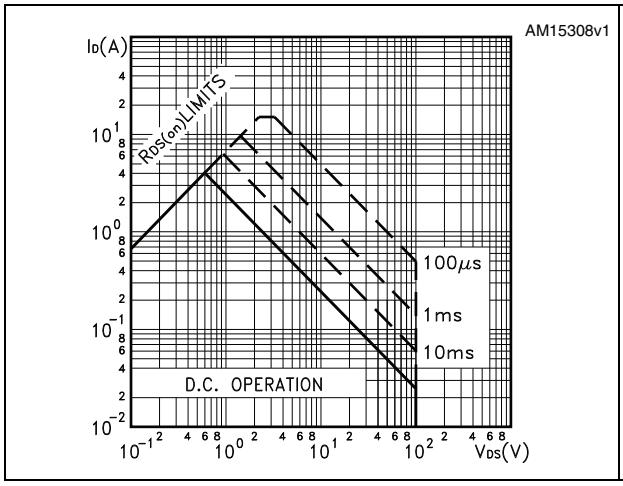

Figure 3. Thermal impedance

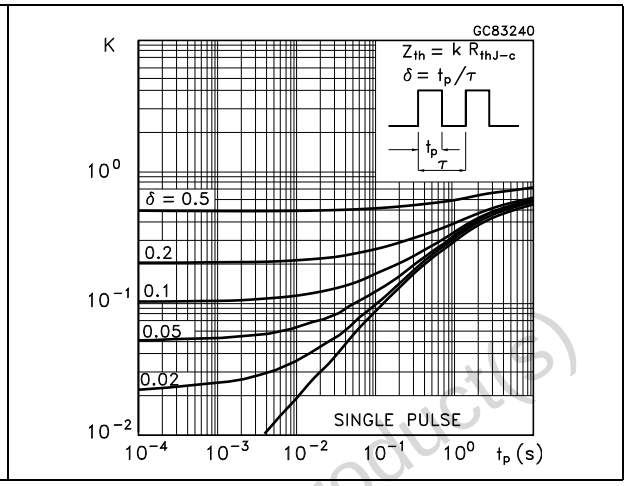

Figure 4. Output characterisics

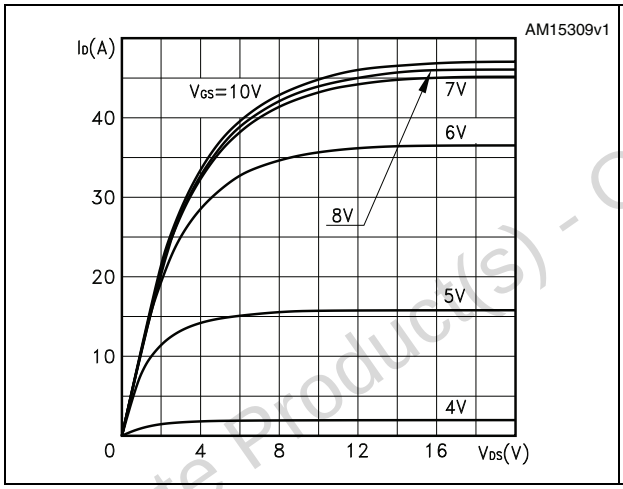

Figure 5. Transfer characteristics

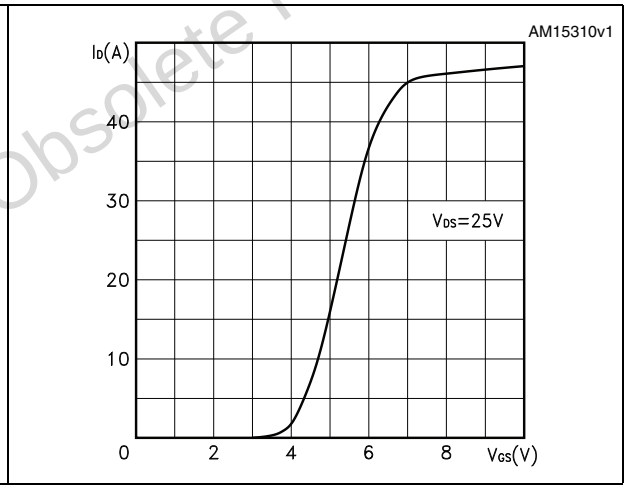

Figure 6. Transconductance

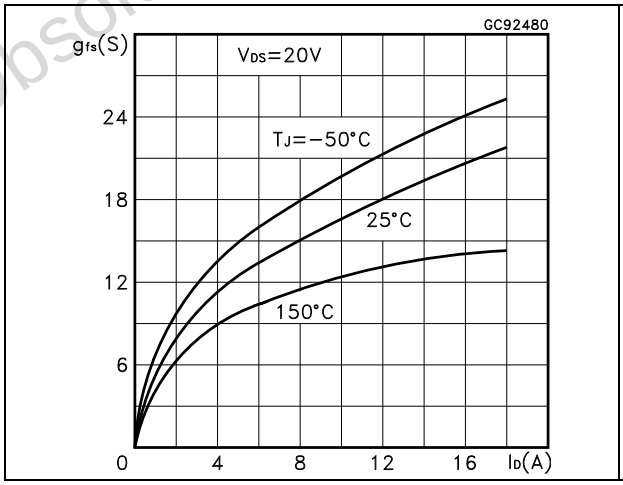

Figure 7. Static drain-source on-resistance

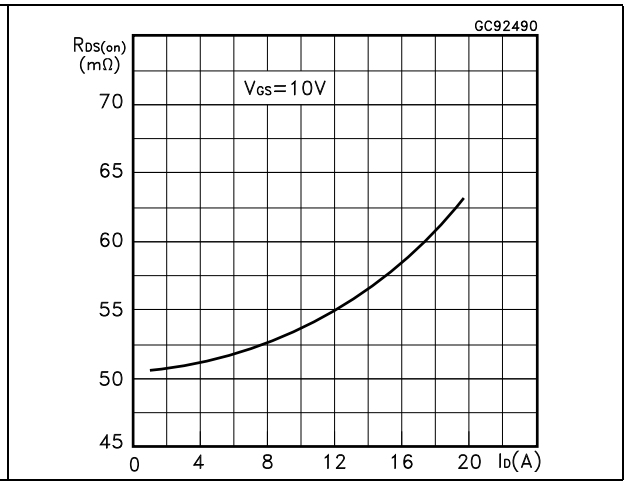

Obsolete Product(s) - Obsolete Product(s)

Figure 8. Gate charge vs gate-source voltage

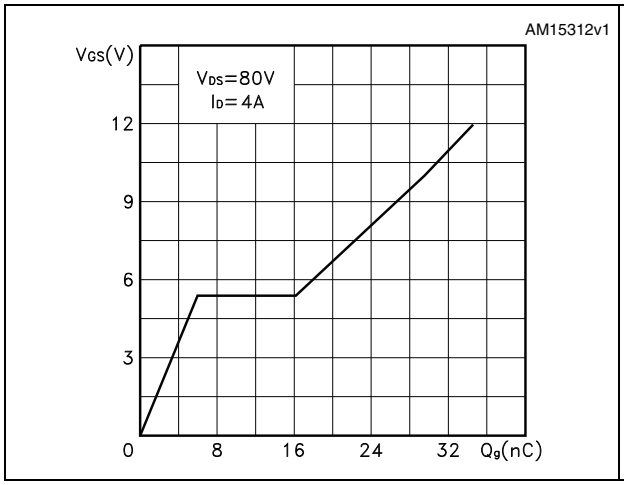

Figure 9. Capacitance variations

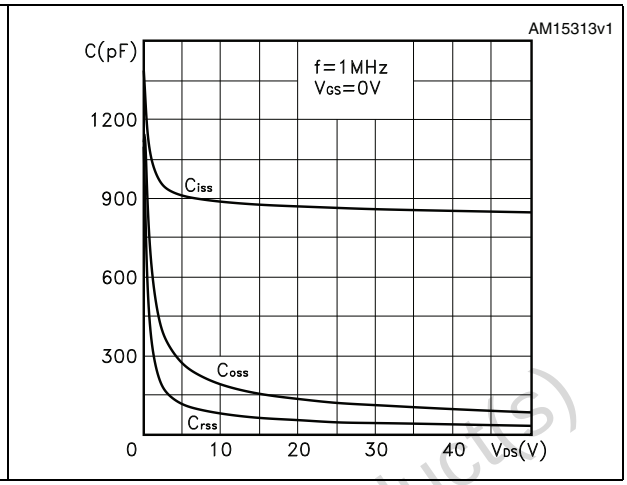

Figure 10. Normalized gate threshold voltage vs temperature

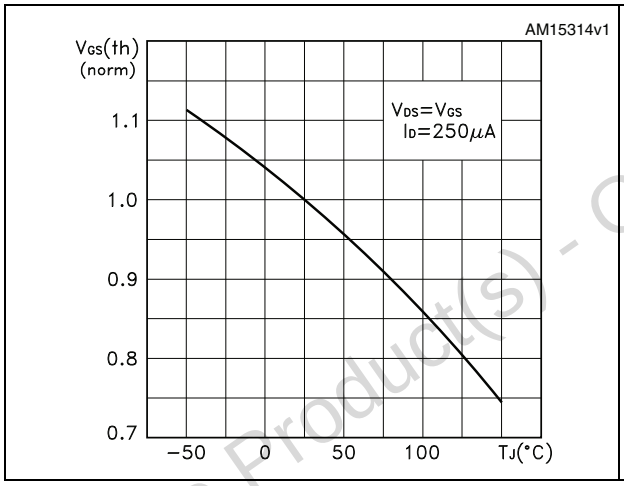

Figure 11. Normalized on-resistance vs temperature

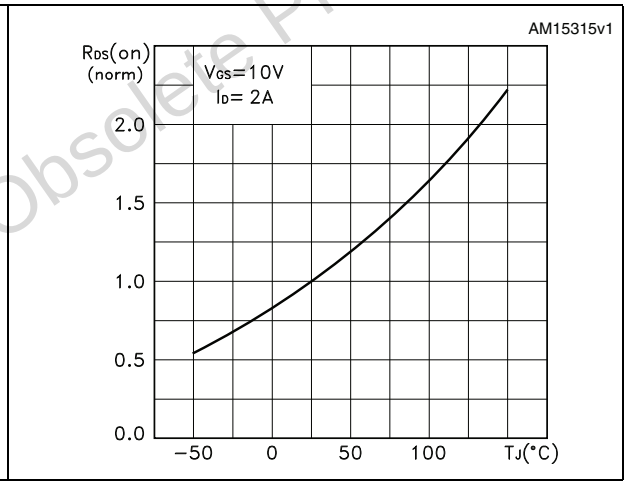

Figure 12. Source-drain diode forward characteristics

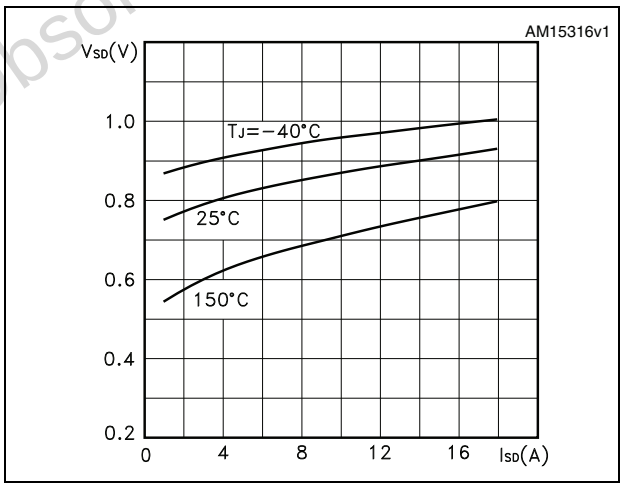

Obsolete Product(s) - Obsolete Product(s)

3 Test circuit

Figure 13. Switching times test circuit for resistive load

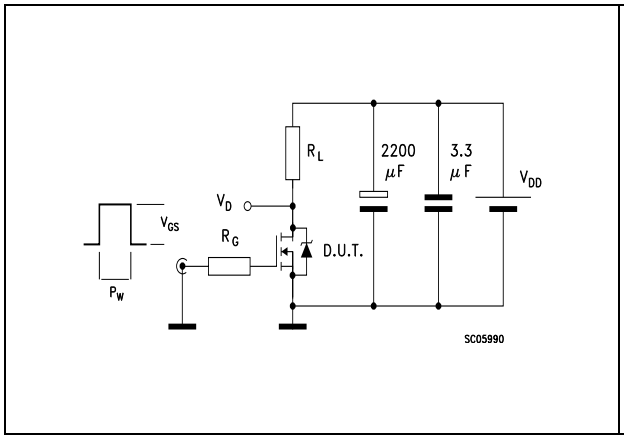

Figure 14. Gate charge test circuit

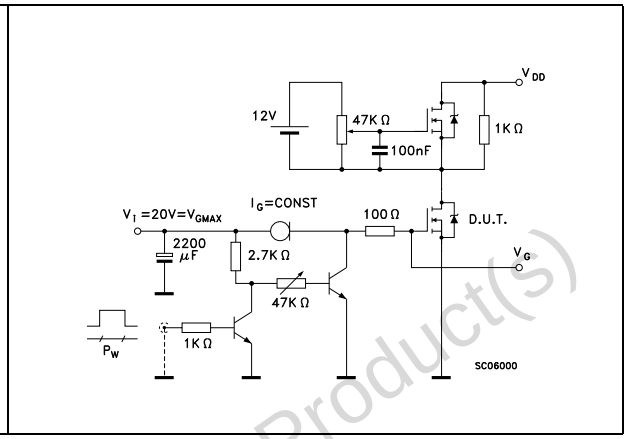

Figure 15. Test circuit for inductive load switching and diode recovery times

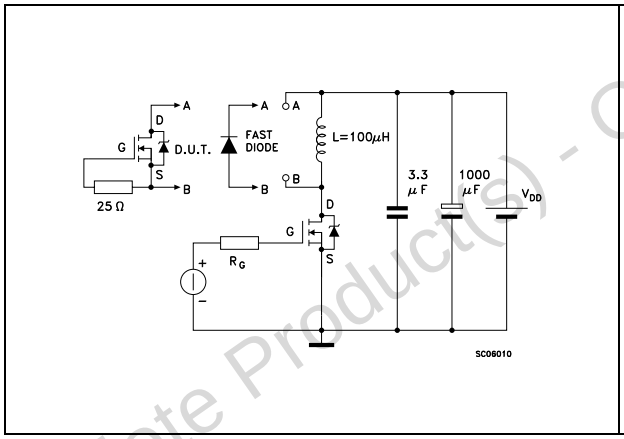

Figure 16. Unclamped Inductive load test circuit

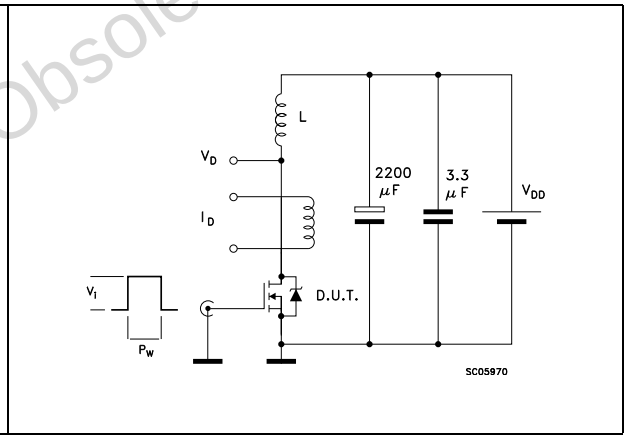

Figure 17. Unclamped inductive waveform

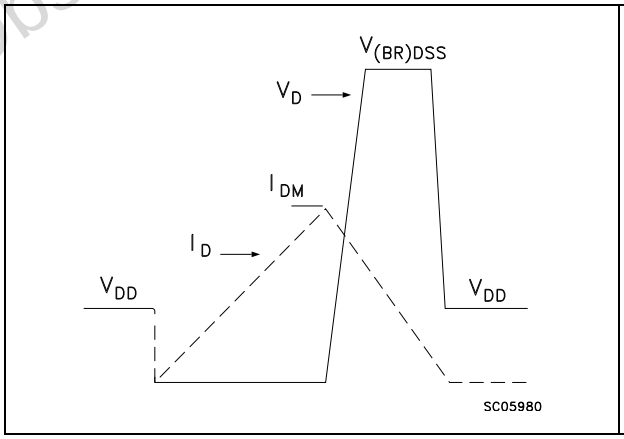

Figure 18. Switching time waveform

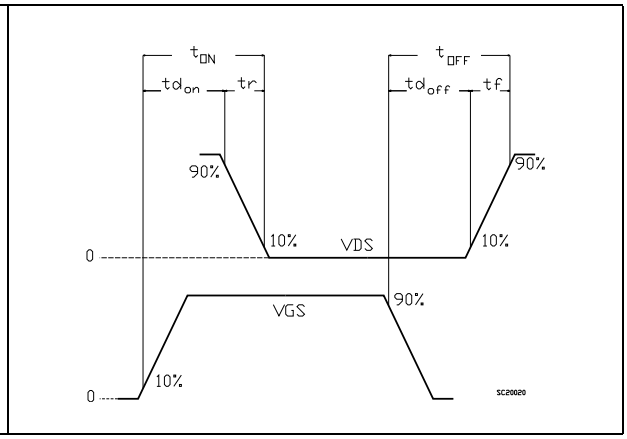

Obsolete Product(s) - Obsolete Product(s)

4 Package mechanical data

In order to meet environmental requirements, ST offers these devices in different grades of ECOPACK® packages, depending on their level of environmental compliance. ECOPACK® specifications, grade definitions and product status are available at: *www.st.com*. ECOPACK® is an ST trademark.

Obsolete Product(s) - Obsolete Product(s)

Table 8. SO-8 mechanical data

Dim.	mm		
	Min.	Typ.	Max.
A			1.75
A1	0.10		0.25
A2	1.25		
b	0.31		0.51
b1	0.28		0.48
c	0.10		0.25
c1	0.10		0.23
D	4.80	4.90	5.00
E	5.80	6.00	6.20
E1	3.80	3.90	4.00
e		1.27	
h	0.25		0.50
L	0.40		1.27
L1		1.04	
L2		0.25	
k	0°		8°
ccc			0.10

Figure 19. SO-8 drawing

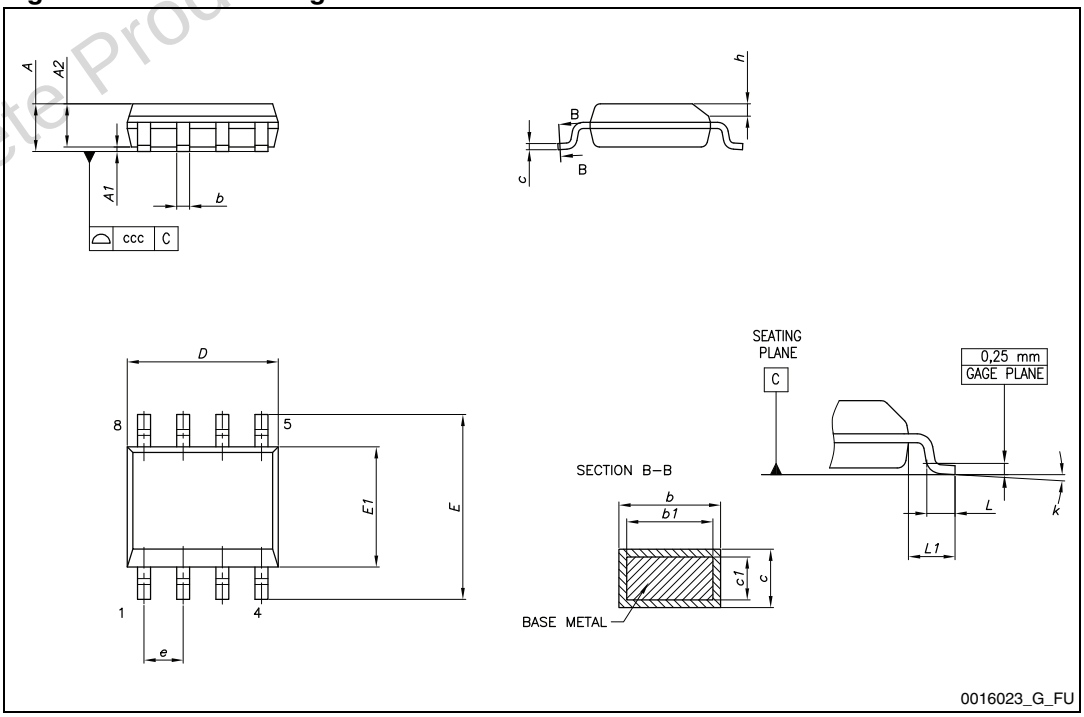

Obsolete Product(s) - Obsolete Product(s)

Figure 20. SO-8 recommended footprint[a]

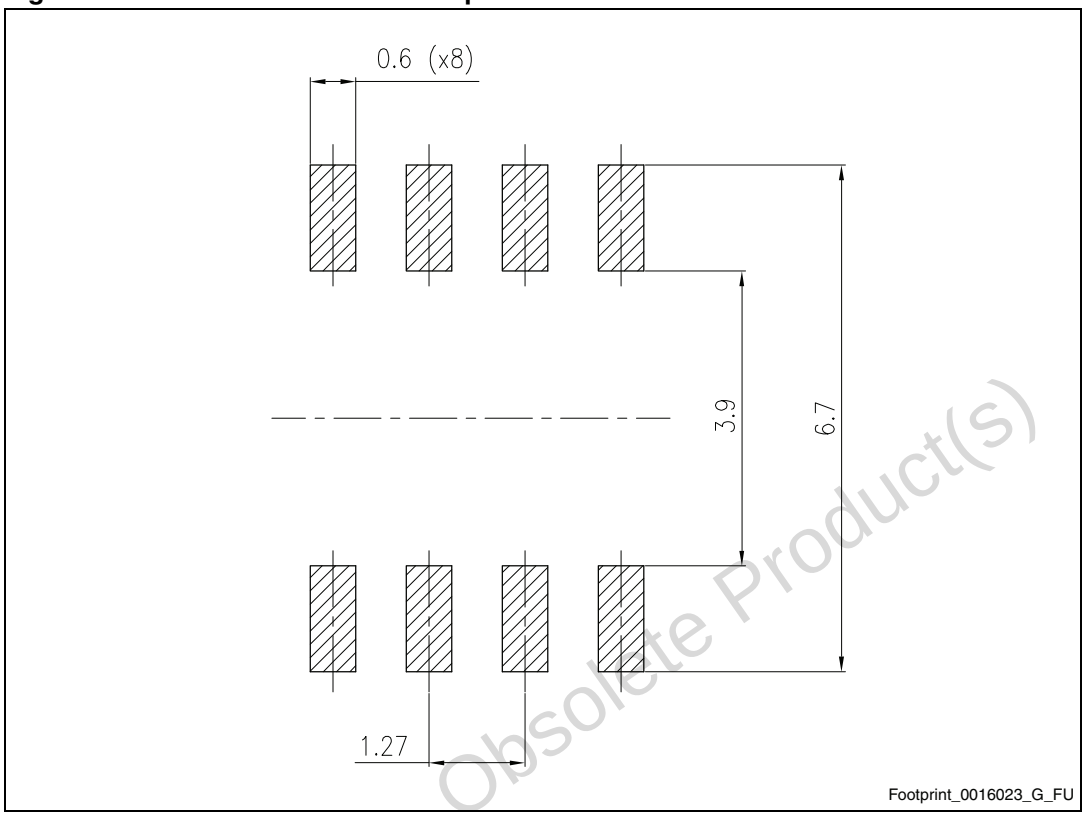

Obsolete Product(s) - Obsolete Product(s)

a. All dimensions are in millimeters.

5 Revision history

Table 9. Revision history

Date	Revision	Changes
11-Sep-2006	1	First release
15-Nov-2006	2	The document has been reformatted
26-Jan-2007	3	Typo mistake on *Table 3*.
19-Nov-2012	4	Changed: marking in cover page

Obsolete Product(s) - Obsolete Product(s)

Obsolete Product(s) - Obsolete Product(s)

Please Read Carefully:

Information in this document is provided solely in connection with ST products. STMicroelectronics NV and its subsidiaries (“ST”) reserve the right to make changes, corrections, modifications or improvements, to this document, and the products and services described herein at any time, without notice.

All ST products are sold pursuant to ST’s terms and conditions of sale.

Purchasers are solely responsible for the choice, selection and use of the ST products and services described herein, and ST assumes no liability whatsoever relating to the choice, selection or use of the ST products and services described herein.

No license, express or implied, by estoppel or otherwise, to any intellectual property rights is granted under this document. If any part of this document refers to any third party products or services it shall not be deemed a license grant by ST for the use of such third party products or services, or any intellectual property contained therein or considered as a warranty covering the use in any manner whatsoever of such third party products or services or any intellectual property contained therein.

UNLESS OTHERWISE SET FORTH IN ST’S TERMS AND CONDITIONS OF SALE ST DISCLAIMS ANY EXPRESS OR IMPLIED WARRANTY WITH RESPECT TO THE USE AND/OR SALE OF ST PRODUCTS INCLUDING WITHOUT LIMITATION IMPLIED WARRANTIES OF MERCHANTABILITY, FITNESS FOR A PARTICULAR PURPOSE (AND THEIR EQUIVALENTS UNDER THE LAWS OF ANY JURISDICTION), OR INFRINGEMENT OF ANY PATENT, COPYRIGHT OR OTHER INTELLECTUAL PROPERTY RIGHT.

UNLESS EXPRESSLY APPROVED IN WRITING BY TWO AUTHORIZED ST REPRESENTATIVES, ST PRODUCTS ARE NOT RECOMMENDED, AUTHORIZED OR WARRANTED FOR USE IN MILITARY, AIR CRAFT, SPACE, LIFE SAVING, OR LIFE SUSTAINING APPLICATIONS, NOR IN PRODUCTS OR SYSTEMS WHERE FAILURE OR MALFUNCTION MAY RESULT IN PERSONAL INJURY, DEATH, OR SEVERE PROPERTY OR ENVIRONMENTAL DAMAGE. ST PRODUCTS WHICH ARE NOT SPECIFIED AS "AUTOMOTIVE GRADE" MAY ONLY BE USED IN AUTOMOTIVE APPLICATIONS AT USER’S OWN RISK.

Resale of ST products with provisions different from the statements and/or technical features set forth in this document shall immediately void any warranty granted by ST for the ST product or service described herein and shall not create or extend in any manner whatsoever, any liability of ST.

ST and the ST logo are trademarks or registered trademarks of ST in various countries.

Information in this document supersedes and replaces all information previously supplied.

The ST logo is a registered trademark of STMicroelectronics. All other names are the property of their respective owners.

© 2012 STMicroelectronics - All rights reserved

STMicroelectronics group of companies

Australia - Belgium - Brazil - Canada - China - Czech Republic - Finland - France - Germany - Hong Kong - India - Israel - Italy - Japan - Malaysia - Malta - Morocco - Philippines - Singapore - Spain - Sweden - Switzerland - United Kingdom - United States of America

www.st.com