STE250NS10

N-channel 100 V, 0.0045 Ω, 220 A, ISOTOP STripFET™ Power MOSFET

Features

Type	V_{DSS}	$R_{DS(on)}$	I_D
STE250NS10	100 V	<0.0055 Ω	220 A

- Standard threshold drive
- 100% avalanche tested

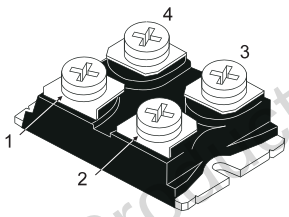

ISOTOP

Description

This Power MOSFET is the latest development of STMicroelectronics unique "single feature size" strip-based process. The resulting transistor shows extremely high packing density for low on-resistance, rugged avalanche characteristics and less critical alignment steps therefore a remarkable manufacturing reproducibility.

Figure 1. Internal schematic diagram

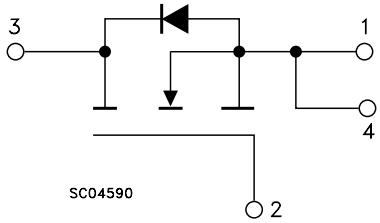

Applications

- Switching application

Obsolete Product(s) - Obsolete Product(s)

Table 1. Device summary

Order code	Marking	Package	Packaging
STE250NS10	E250NS10	ISOTOP	Tube

Contents

1 Electrical ratings 3

2 Electrical characteristics 4

2.1 Electrical characteristics (curves) 6

3 Test circuits 8

4 Package mechanical data 9

5 Mounting information 11

5.1 Mounting on heatsink 11

6 Revision history 13

Obsolete Product(s) - Obsolete Product(s)

1 Electrical ratings

Table 2. Absolute maximum ratings

Symbol	Parameter	Value	Unit
V_{DS}	Drain-source voltage (v_{gs} = 0)	100	V
V_{GS}	Gate- source voltage	±20	V
I_D	Drain current (continuos) at T_C = 25°C	220	A
I_D	Drain current (continuos) at T_C = 100°C	156	A
I_{DM} (1)	Drain current (pulsed)	880	A
P_{TOT}	Total dissipation at T_C = 25°C	500	W
	Derating factor	4	W/°C
dv/dt(2)	Peak diode recovery voltage slope	3.5	V/ns
V_{ISO}	Insulation winthstand voltage (DC)	2500	V
T_J T_{stg}	Operating junction temperature Storage temperature	150 -55 to 150	°C

1. Pulse width limited by safe operating area
2. I_{SD} ≤220 A, di/dt ≤200 A/µs, V_{DD} ≤$V_{(BR)DSS}$, T_j ≤T_{JMAX}

Table 3. Thermal data

Symbol	Parameter	Value	Unit
$R_{thj\text{-}case}$	Thermal resistance junction-case Max	0.25	°CW
$R_{thj\text{-}a}$	Thermal resistance junction-ambient Max	50	°CW

Table 4. Avalanche characteristics

Symbol	Parameter	Value	Unit
I_{AS}	Avalanche current, repetitive or not-repetitive (pulse width limited by Tj max)	220	A
E_{AS}	Single pulse avalanche energy (starting Tj=25 °C, Id=Iar, Vdd=64 V)	800	mJ

Obsolete Product(s) - Obsolete Product(s)

2 Electrical characteristics

(T_{CASE}=25°C unless otherwise specified)

Table 5. On/off states

Symbol	Parameter	Test conditions	Min.	Typ.	Max.	Unit
$V_{(BR)DSS}$	Drain-source Breakdown voltage	I_D = 1 mA, V_{GS} = 0	100			V
I_{DSS}	Zero gate voltage Drain current (V_{GS} = 0)	V_{DS} = max rating			50	µA
		V_{DS}= max rating, T_C=125°C			500	µA
I_{GSS}	Gate-body leakage current (V_{DS} = 0)	V_{GS} = ± 20 V			±400	nA
$V_{GS(th)}$	Gate threshold voltage	V_{DS} = V_{GS}, I_D = 250 µA	2	3	4	V
$R_{DS(on)}$	Static drain-source on resistance	V_{GS} = 10 V, I_D = 125 A		0.0045	0.0055	Ω

Table 6. Dynamic

Symbol	Parameter	Test conditions	Min.	Typ.	Max.	Unit
g_{fs}	Forward transconductance	V_{DS} = 20 V, I_D=70 A	-	60	-	S
C_{iss}	Input capacitance	V_{DS} = 25 V, f = 1 MHz, V_{GS} = 0	-	31	-	nF
C_{oss}	Output capacitance			4.3		nF
C_{rss}	Reverse transfer capacitance			1.2		nF
Q_g	Total gate charge	V_{DD} = 50 V, I_D = 22 A, V_{GS} = 10 V	-	900	-	nC
Q_{gs}	Gate-source charge			160		nC
Q_{gd}	Gate-drain charge			330		nC

Table 7. Switching times

Symbol	Parameter	Test conditions	Min.	Typ.	Max.	Unit
$t_{d(on)}$	Turn-on delay time	V_{DD}=50 V, I_D=125 A, R_G=4.7 Ω, V_{GS}= 10 V (see *Figure 14*)	-	110	-	ns
t_r	Rise time			380		ns
$t_{d(off)}$	Turn-off-delay time	V_{DD}=50 V, I_D=125 A, R_G=4.7 Ω, V_{GS}= 10 V (see *Figure 13*)	-	1100	-	ns
t_f	Fall time			300		ns
$t_{r(Voff)}$	Off-voltage rise time	V_{DD}=80 V, I_D=220 A, R_G=4.7 Ω, V_{GS}=10 V (see *Figure 15*)	-	950	-	ns
t_f	fall time			330		ns
t_c	cross-over time			600		ns

Obsolete Product(s) - Obsolete Product(s)

Table 8. Source drain diode

Symbol	Parameter	Test conditions	Min	Typ.	Max	Unit
I_{SD}	Source-drain current		-		220	A
I_{SDM} (1)	Source-drain current (pulsed)		-		880	A
V_{SD} (2)	Forward on voltage	I_{SD} = 220 A, V_{GS} = 0	-		1.5	V
t_{rr} Q_{rr} I_{RRM}	Reverse recovery time Reverse recovery charge Reverse recovery current	I_{SD} = 220 A, V_{DD} = 30 V di/dt = 100 A/µs, T_j = 150°C (see Figure 16)	-	200 1.35 13.5		ns µC A

1. Pulse width limited by safe operating area.
2. Pulsed: Pulse duration = 300 µs, duty cycle 1.5 %

Obsolete Product(s) - Obsolete Product(s)

2.1 Electrical characteristics (curves)

Figure 2. Safe operating area

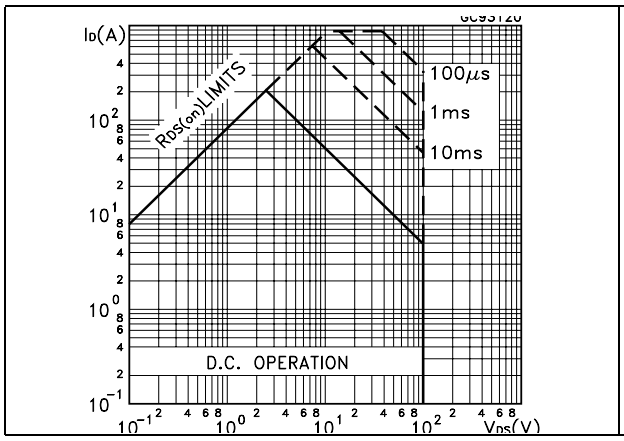

Figure 3. Thermal impedance

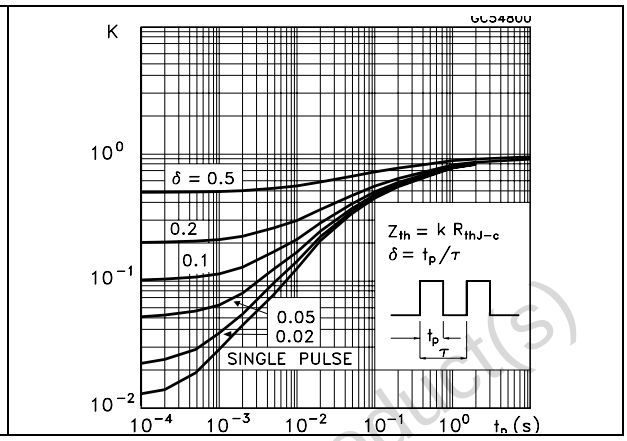

Figure 4. Output characterisics

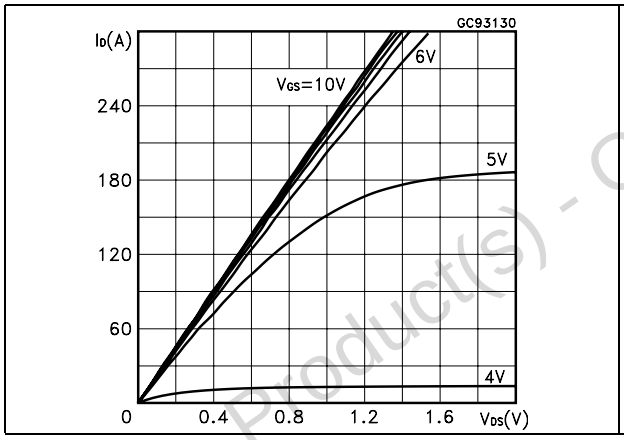

Figure 5. Transfer characteristics

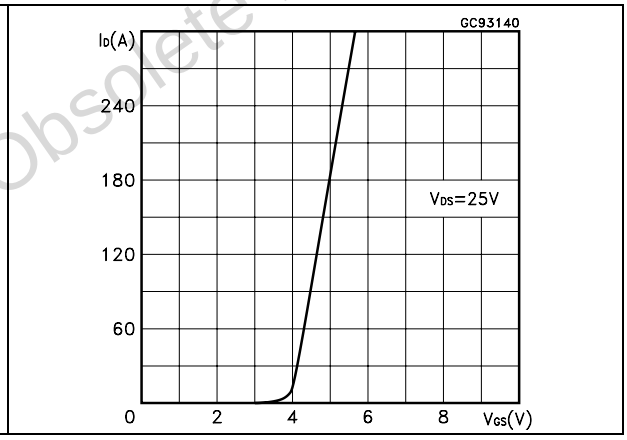

Figure 6. Transconductance

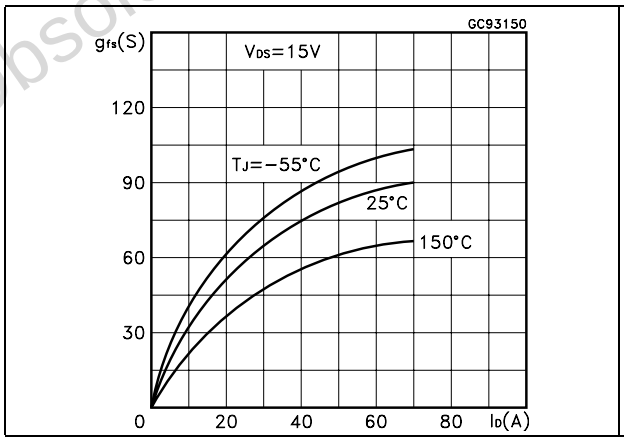

Figure 7. Static drain-source on resistance

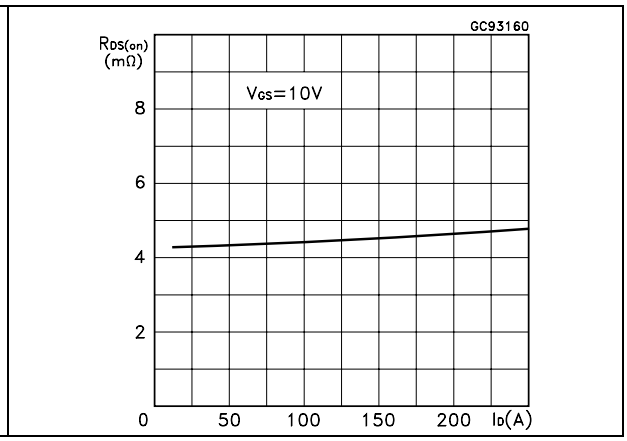

Obsolete Product(s) - Obsolete Product(s)

Figure 8. Gate charge vs gate-source voltage

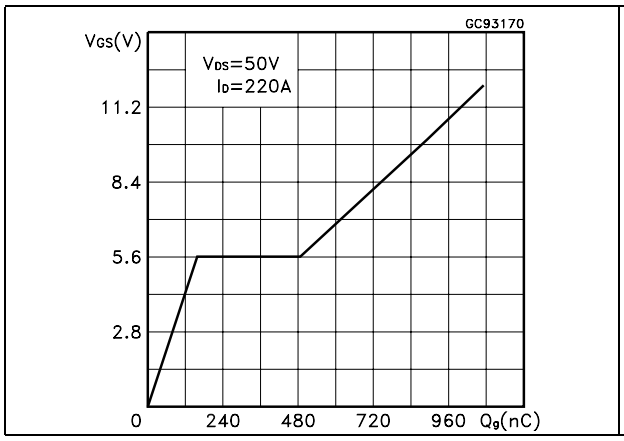

Figure 9. Capacitance variations

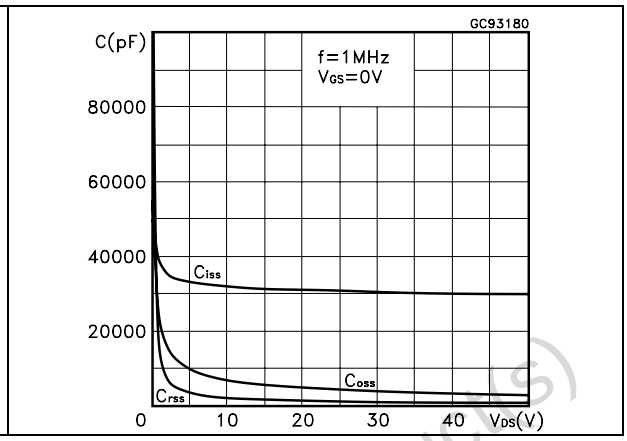

Figure 10. Normalized gate threshold voltage vs temperature

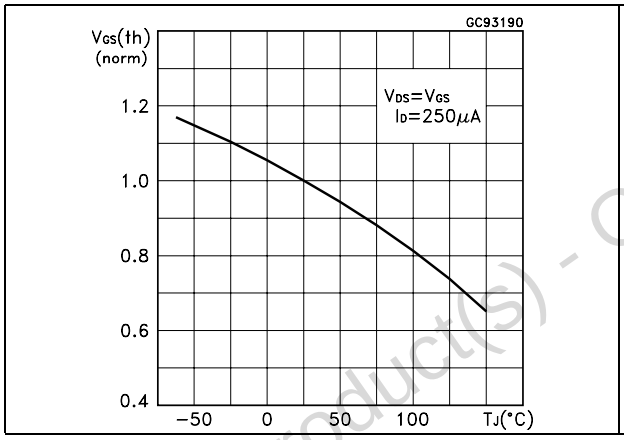

Figure 11. Normalized on resistance vs temperature

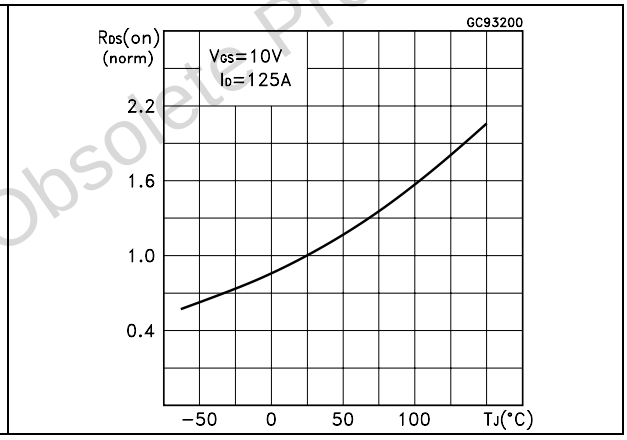

Figure 12. Source-drain diode forward characteristics

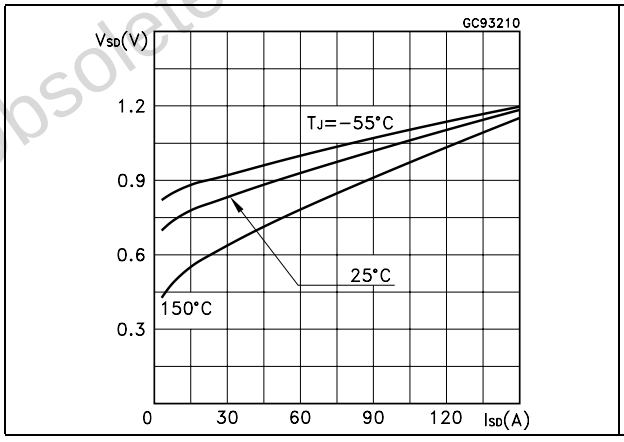

Figure 13. Normalized breakdown voltage vs temperature

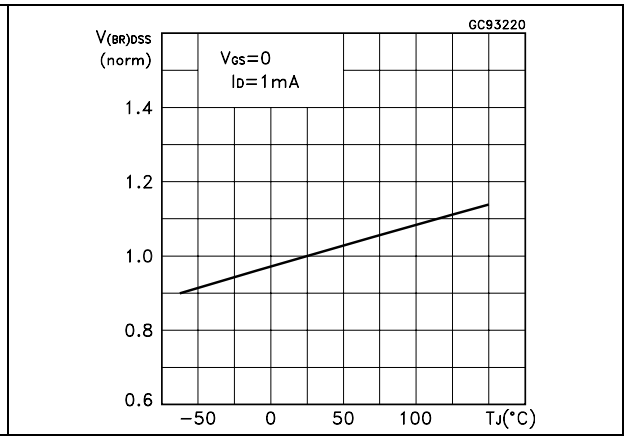

Obsolete Product(s) - Obsolete Product(s)

3 Test circuits

Figure 14. Switching times test circuit for resistive load

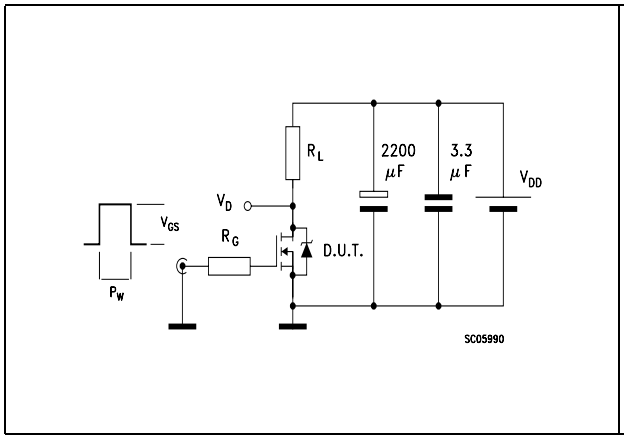

Figure 15. Gate charge test circuit

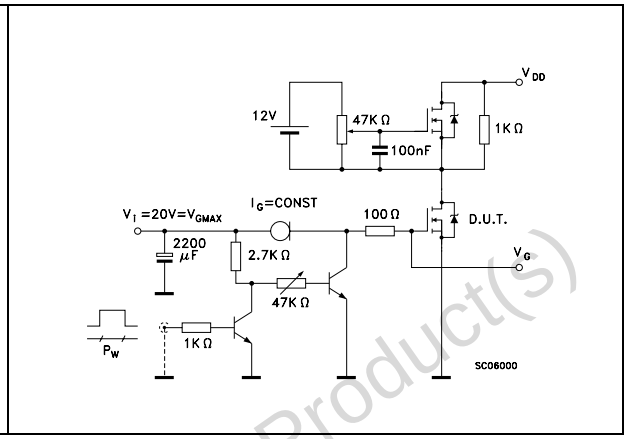

Figure 16. Test circuit for inductive load switching and diode recovery times

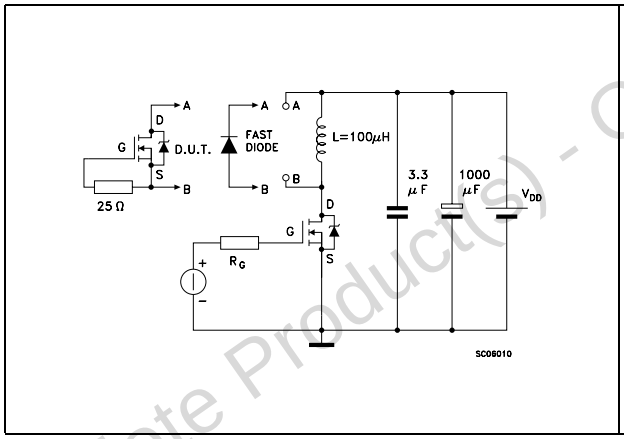

Figure 17. Unclamped inductive load test circuit

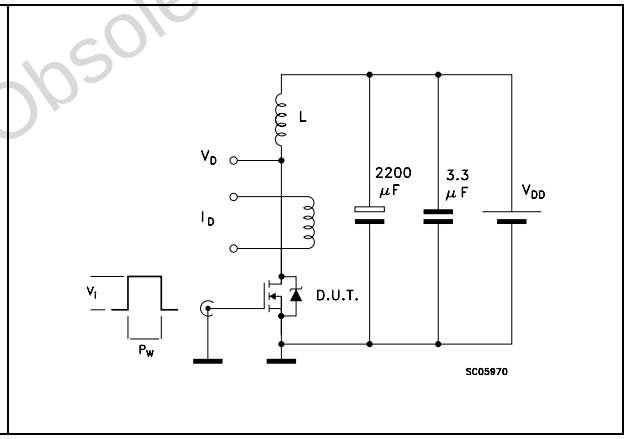

Figure 18. Unclamped inductive waveform

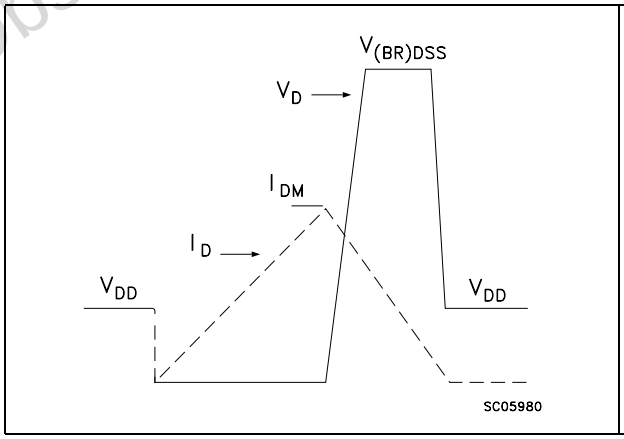

Figure 19. Switching time waveform

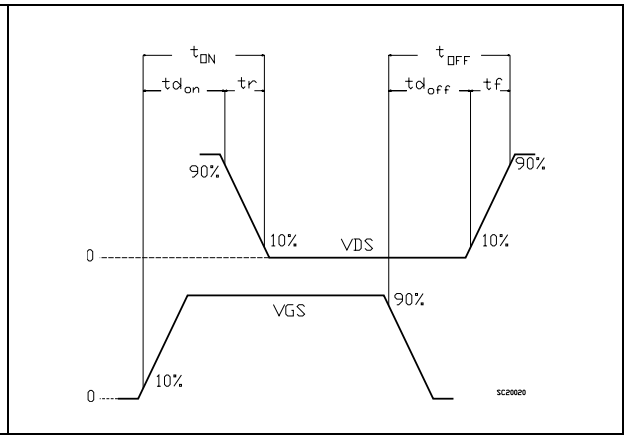

Obsolete Product(s) - Obsolete Product(s)

4 Package mechanical data

In order to meet environmental requirements, ST offers these devices in different grades of ECOPACK® packages, depending on their level of environmental compliance. ECOPACK® specifications, grade definitions and product status are available at: www.st.com. ECOPACK is an ST trademark.

Obsolete Product(s) - Obsolete Product(s)

ISOTOP MECHANICAL DATA

DIM.	mm			inch		
	MIN.	TYP.	MAX.	MIN.	TYP.	MAX.
A	11.8		12.2	0.466		0.480
B	8.9		9.1	0.350		0.358
C	1.95		2.05	0.076		0.080
D	0.75		0.85	0.029		0.033
E	12.6		12.8	0.496		0.503
F	25.15		25.5	0.990		1.003
G	31.5		31.7	1.240		1.248
H	4			0.157		
J	4.1		4.3	0.161		0.169
K	14.9		15.1	0.586		0.594
L	30.1		30.3	1.185		1.193
M	37.8		38.2	1.488		1.503
N	4			0.157		
O	7.8		8.2	0.307		0.322

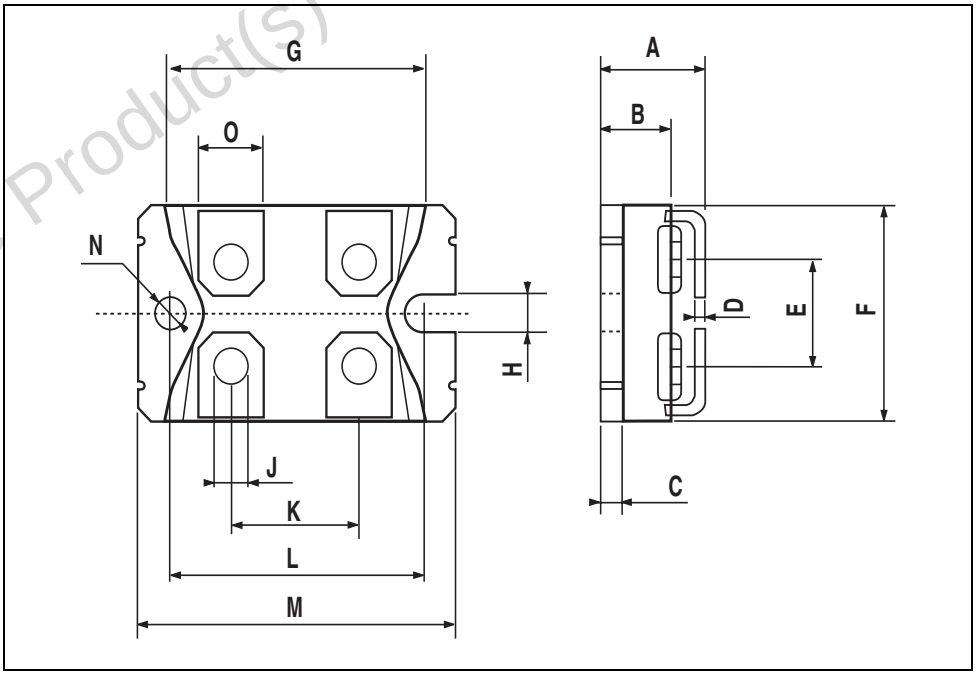

Obsolete Product(s) - Obsolete Product(s)

5 Mounting information

5.1 Mounting on heatsink

Figure 20. Screws distance

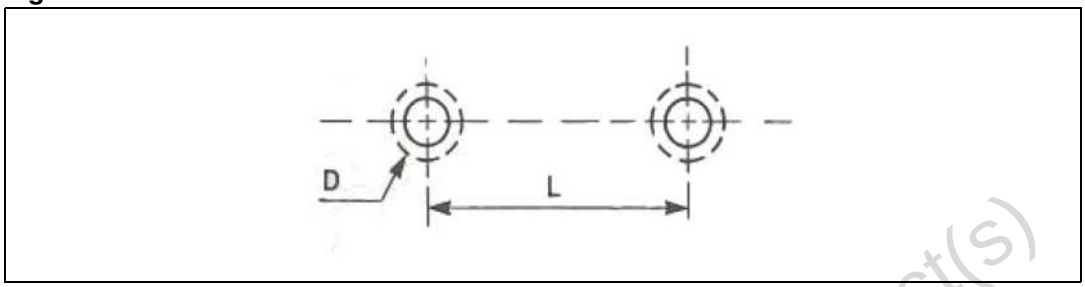

Table 9. Heatsink specification

Parameter	Value
Flatness (max concavity or convexity between fixing holes)	≤ 20 µm (0.78 mils)
Surface finish	± 1.2 µm (± 0.05 mils)
Fixing holes	D= M4 L= 30 + 3 mm (1.181 + 0.012 inch)

Table 10. Mounting specification

Parameter	Value
Fixing screw	M4 + lock washer
Torque	1.3 ± 0.2 N•m (7.6 ± 1.2 LBS•inch)
$R_{thj\text{-}case/heatsink}$	≤ 0.05 °CW

Table 11. Connectors

Parameter	Value
Screws	See *Figure 21*
Torque	1.3 ± 0.2 N•m (7.6 ± 1.2 LBS•inch)
Pull test (fast on pins)	≤ 80 N
Twist test	N/A

Obsolete Product(s) - Obsolete Product(s)

Table 11. Connectors (continued)

Parameter	Value
Contact area (screw version)	45 mm^2
Lead inductance	≤ 5 nH

Figure 21. Mounting section

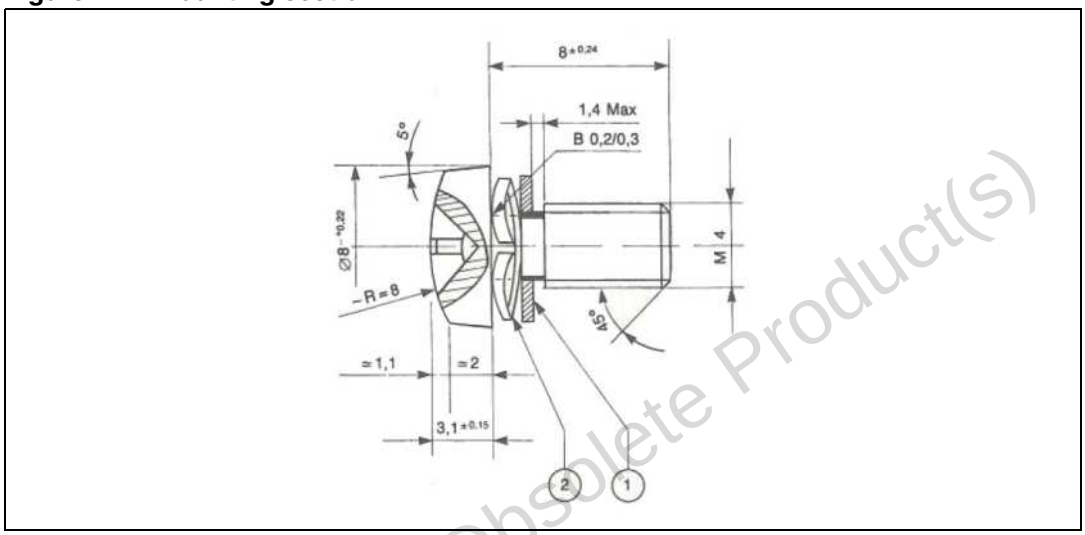

Figure 22. Cross form

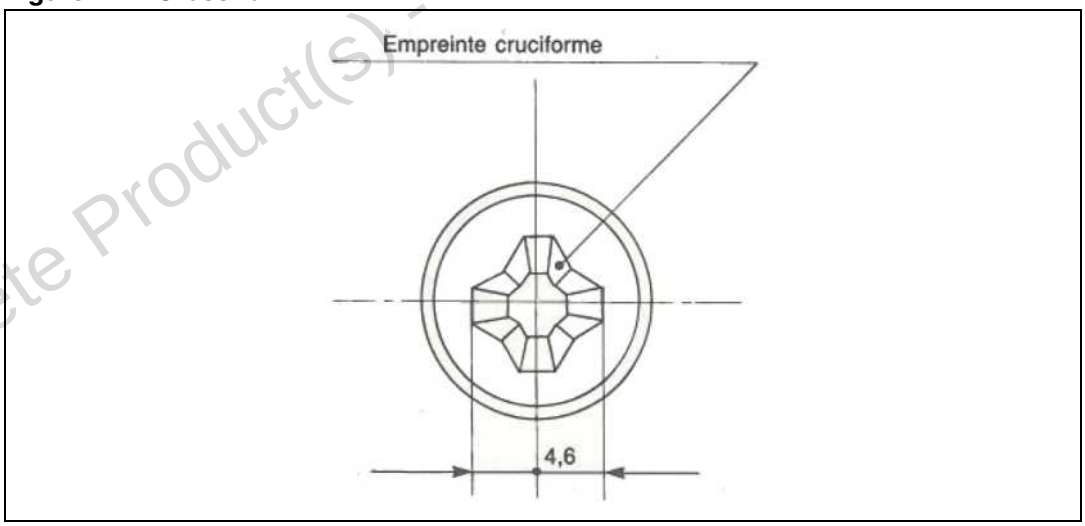

Table 12. Package for shipment

Shipment	Details
Tube	10 pcs + contact set (screw +washer)
Elementary box (bulk quantity)	100 pieces (10 tubes)
Ordered quantity	Multiples of 10 pcs

Obsolete Product(s) - Obsolete Product(s)

6 Revision history

Table 13. Revision history

Date	Revision	Changes
21-Jun-2004	1	Complete version.
04-Oct-2006	2	New template, no content change.
22-Mar-2010	3	Added *Section 5: Mounting information*.

Obsolete Product(s) - Obsolete Product(s)

Please Read Carefully:

Information in this document is provided solely in connection with ST products. STMicroelectronics NV and its subsidiaries (“ST”) reserve the right to make changes, corrections, modifications or improvements, to this document, and the products and services described herein at any time, without notice.

All ST products are sold pursuant to ST’s terms and conditions of sale.

Purchasers are solely responsible for the choice, selection and use of the ST products and services described herein, and ST assumes no liability whatsoever relating to the choice, selection or use of the ST products and services described herein.

No license, express or implied, by estoppel or otherwise, to any intellectual property rights is granted under this document. If any part of this document refers to any third party products or services it shall not be deemed a license grant by ST for the use of such third party products or services, or any intellectual property contained therein or considered as a warranty covering the use in any manner whatsoever of such third party products or services or any intellectual property contained therein.

UNLESS OTHERWISE SET FORTH IN ST’S TERMS AND CONDITIONS OF SALE ST DISCLAIMS ANY EXPRESS OR IMPLIED WARRANTY WITH RESPECT TO THE USE AND/OR SALE OF ST PRODUCTS INCLUDING WITHOUT LIMITATION IMPLIED WARRANTIES OF MERCHANTABILITY, FITNESS FOR A PARTICULAR PURPOSE (AND THEIR EQUIVALENTS UNDER THE LAWS OF ANY JURISDICTION), OR INFRINGEMENT OF ANY PATENT, COPYRIGHT OR OTHER INTELLECTUAL PROPERTY RIGHT.

UNLESS EXPRESSLY APPROVED IN WRITING BY AN AUTHORIZED ST REPRESENTATIVE, ST PRODUCTS ARE NOT RECOMMENDED, AUTHORIZED OR WARRANTED FOR USE IN MILITARY, AIR CRAFT, SPACE, LIFE SAVING, OR LIFE SUSTAINING APPLICATIONS, NOR IN PRODUCTS OR SYSTEMS WHERE FAILURE OR MALFUNCTION MAY RESULT IN PERSONAL INJURY, DEATH, OR SEVERE PROPERTY OR ENVIRONMENTAL DAMAGE. ST PRODUCTS WHICH ARE NOT SPECIFIED AS "AUTOMOTIVE GRADE" MAY ONLY BE USED IN AUTOMOTIVE APPLICATIONS AT USER’S OWN RISK.

Resale of ST products with provisions different from the statements and/or technical features set forth in this document shall immediately void any warranty granted by ST for the ST product or service described herein and shall not create or extend in any manner whatsoever, any liability of ST.

ST and the ST logo are trademarks or registered trademarks of ST in various countries.

Information in this document supersedes and replaces all information previously supplied.

The ST logo is a registered trademark of STMicroelectronics. All other names are the property of their respective owners.

© 2010 STMicroelectronics - All rights reserved

STMicroelectronics group of companies

Australia - Belgium - Brazil - Canada - China - Czech Republic - Finland - France - Germany - Hong Kong - India - Israel - Italy - Japan - Malaysia - Malta - Morocco - Philippines - Singapore - Spain - Sweden - Switzerland - United Kingdom - United States of America

www.st.com

Obsolete Product(s) - Obsolete Product(s)