STS9NF3LL

N-CHANNEL 30V - 0.016 Ω - 9A SO-8
LOW GATE CHARGE STripFET™ II POWER MOSFET

TYPE	V_{DSS}	$R_{DS(on)}$	I_D
STS9NF3LL	30 V	<0.019 Ω	9 A

- TYPICAL $R_{DS}(on)$ = 0.016 Ω
- OPTIMAL $R_{DS}(on)$ x Qg TRADE-OFF @ 4.5V
- CONDUCTION LOSSES REDUCED
- SWITCHING LOSSES REDUCED

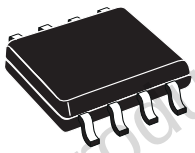

SO-8

DESCRIPTION

This application specific Power MOSFET is the second generation of STMicroelectronis unique "Single Feature Size™" strip-based process. The resulting transistor shows the best trade-off between on-resistance and gate charge. When used as high and low side in buck regulators, it gives the best performance in terms of both conduction and switching losses. This is extremely important for motherboards where fast switching and high efficiency are of paramount importance.

APPLICATIONS

- SPECIFICALLY DESIGNED AND OPTIMISED FOR HIGH EFFICIENCY CPU CORE DC/DC CONVERTERS FOR MOBILE PCS

INTERNAL SCHEMATIC DIAGRAM

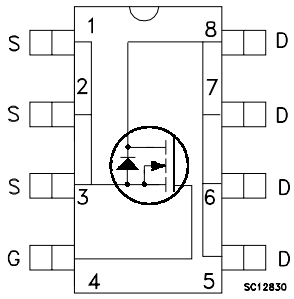

Obsolete Product(s) - Obsolete Product(s)

ABSOLUTE MAXIMUM RATINGS

Symbol	Parameter	Value	Unit
V_{DS}	Drain-source Voltage (V_{GS} = 0)	30	V
V_{DGR}	Drain-gate Voltage (R_{GS} = 20 kΩ)	30	V
V_{GS}	Gate- source Voltage	± 16	V
I_D	Drain Current (continuos) at T_C = 25°C	9	A
I_D	Drain Current (continuos) at T_C = 100°C	5.6	A
I_{DM}(•)	Drain Current (pulsed)	36	A
P_{tot}	Total Dissipation at T_C = 25°C	2.5	W

(•) Pulse width limited by safe operating area.

THERMAL DATA

$R_{thj\text{-}amb}$	(*)Thermal Resistance Junction-ambient	Max	50	°C/W
T_j	Maximum Operating Junction Temperature		150	°C
T_{stg}	Storage Temperature		-55 to 150	°C

(*) When mounted on FR-4 board with 0.5 in^2 pad of Cu.

ELECTRICAL CHARACTERISTICS (T_{case} = 25 °C unless otherwise specified)

OFF

Symbol	Parameter	Test Conditions	Min.	Typ.	Max.	Unit
$V_{(BR)DSS}$	Drain-source Breakdown Voltage	I_D = 250 µA, V_{GS} = 0	30			V
I_{DSS}	Zero Gate Voltage Drain Current (V_{GS} = 0)	V_{DS} = Max Rating V_{DS} = Max Rating T_C = 125°C			1 10	µA µA
I_{GSS}	Gate-body Leakage Current (V_{DS} = 0)	V_{GS} = ± 16 V			±100	nA

ON (*)

Symbol	Parameter	Test Conditions	Min.	Typ.	Max.	Unit
$V_{GS(th)}$	Gate Threshold Voltage	V_{DS} = V_{GS} I_D = 250 µA	1			V
$R_{DS(on)}$	Static Drain-source On Resistance	V_{GS} = 10 V I_D = 4.5 A V_{GS} = 4.5 V I_D = 4.5 A		0.016 0.019	0.019 0.022	Ω Ω

DYNAMIC

Symbol	Parameter	Test Conditions	Min.	Typ.	Max.	Unit
g_{fs} (*)	Forward Transconductance	V_{DS}=15 V I_D = 4 A		12.5		S
C_{iss} C_{oss} C_{rss}	Input Capacitance Output Capacitance Reverse Transfer Capacitance	V_{DS} = 25V, f = 1 MHz, V_{GS} = 0		800 250 60		pF pF pF

Obsolete Product(s) - Obsolete Product(s)

ELECTRICAL CHARACTERISTICS (continued)

SWITCHING ON

Symbol	Parameter	Test Conditions	Min.	Typ.	Max.	Unit
$t_{d(on)}$ t_r	Turn-on Delay Time Rise Time	V_{DD} = 15 V I_D = 4.5 A R_G = 4.7 Ω V_{GS} = 4.5 V (Resistive Load, Figure 1)		18 32		ns ns
Q_g Q_{gs} Q_{gd}	Total Gate Charge Gate-Source Charge Gate-Drain Charge	V_{DD}= 15 V I_D= 9 A V_{GS}= 5 V (see test circuit, Figure 2)		12.5 3.2 4.5	17	nC nC nC

SWITCHING OFF

Symbol	Parameter	Test Conditions	Min.	Typ.	Max.	Unit
$t_{d(off)}$ t_f	Turn-off Delay Time Fall Time	V_{DD} = 15 V I_D = 4.5 A R_G = 4.7Ω, V_{GS} = 4.5 V (Resistive Load, Figure 3)		21 11		ns ns

SOURCE DRAIN DIODE

Symbol	Parameter	Test Conditions	Min.	Typ.	Max.	Unit
I_{SD} I_{SDM} (•)	Source-drain Current Source-drain Current (pulsed)				9 36	A A
V_{SD} (*)	Forward On Voltage	I_{SD} = 9 A V_{GS} = 0			1.2	V
t_{rr} Q_{rr} I_{RRM}	Reverse Recovery Time Reverse Recovery Charge Reverse Recovery Current	I_{SD} = 9 A di/dt = 100A/µs V_{DD} = 15 V T_j = 150°C (see test circuit, Figure 3)		23 17 1.5		ns nC A

(*)Pulsed: Pulse duration = 300 µs, duty cycle 1.5 %.
(•)Pulse width limited by safe operating area.

Obsolete Product(s) - Obsolete Product(s)

Safe Operating Area

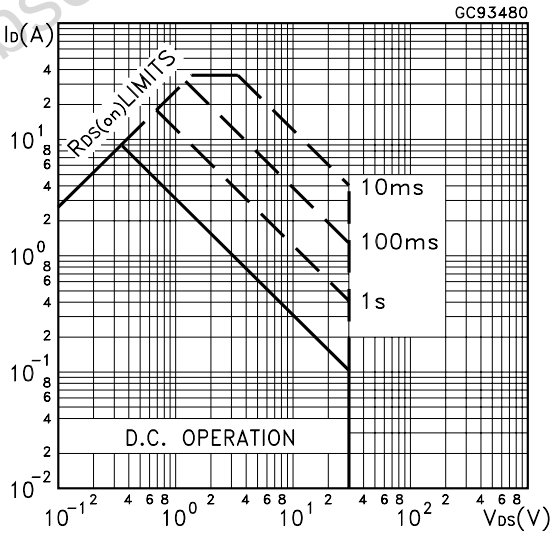

Thermal Impedance

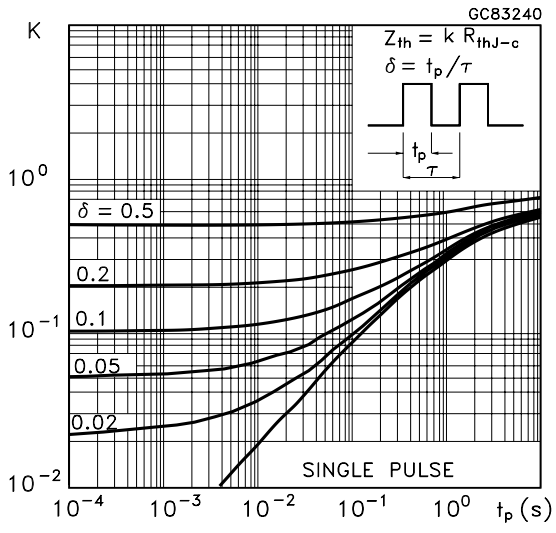

Output Characteristics

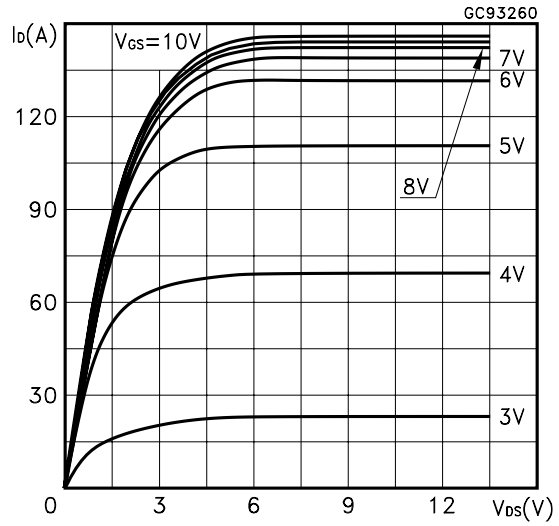

Transfer Characteristics

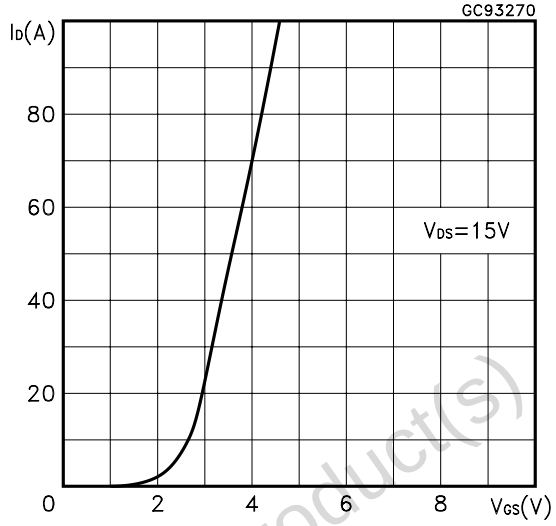

Transconductance

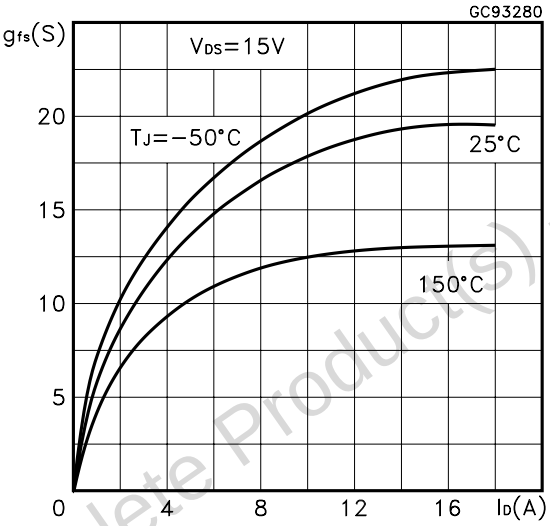

Static Drain-source On Resistance

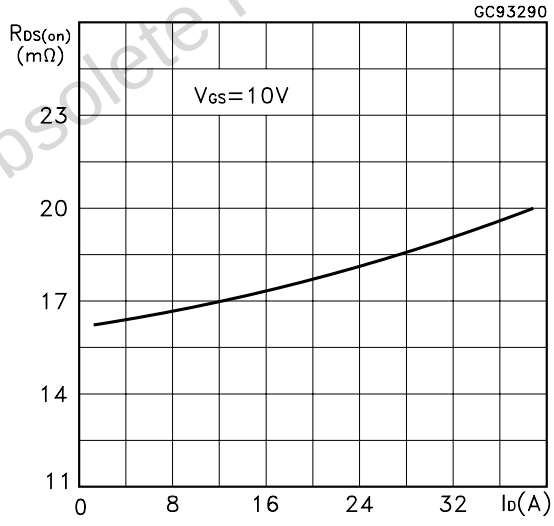

Gate Charge vs Gate-source Voltage

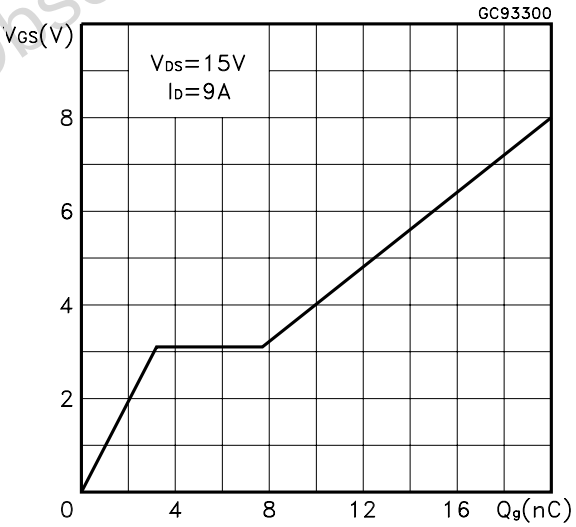

Capacitance Variations

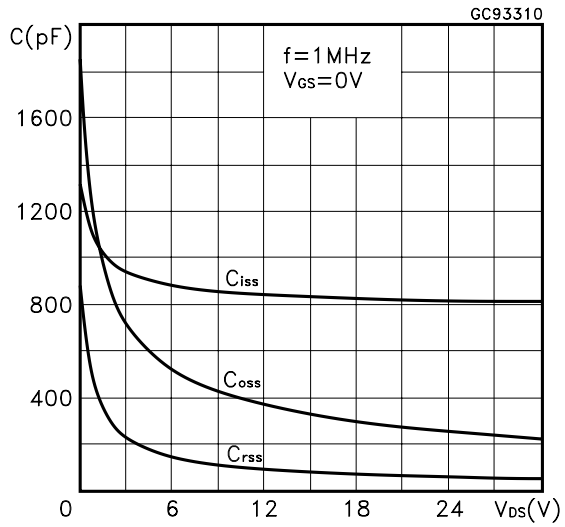

Obsolete Product(s) - Obsolete Product(s)

Normalized Gate Threshold Voltage vs Temperature

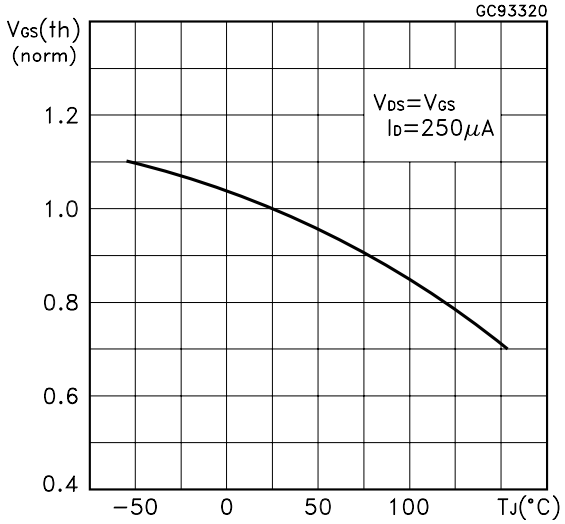

Normalized on Resistance vs Temperature

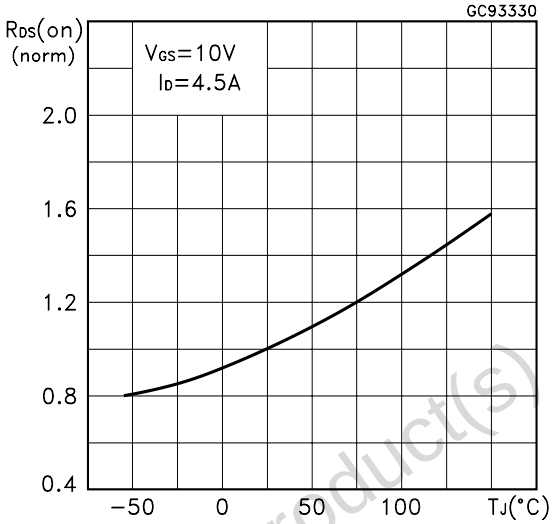

Source-drain Diode Forward Characteristics

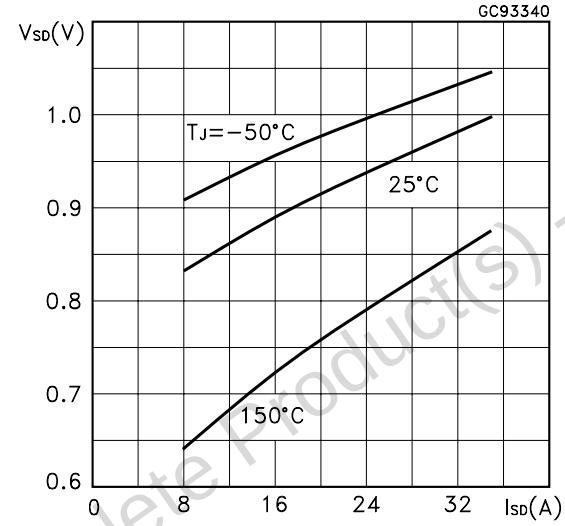

Normalized Breakdown Voltage vs Temperature.

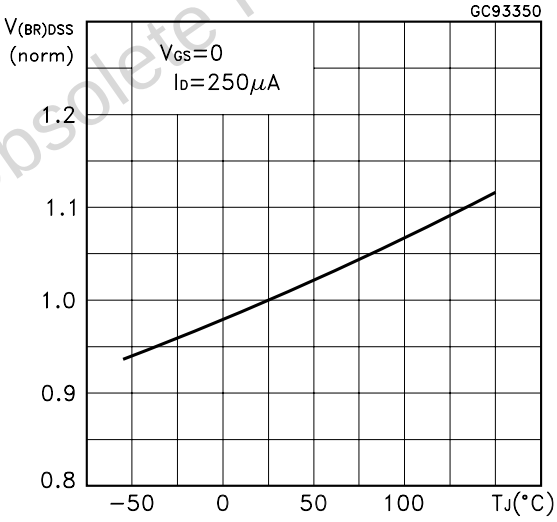

.

.

Obsolete Product(s) - Obsolete Product(s)

Fig. 1: Switching Times Test Circuits For Resistive Load

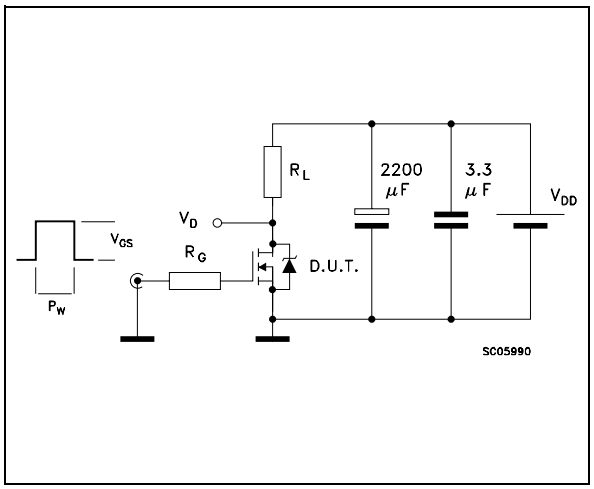

Fig. 2: Gate Charge test Circuit

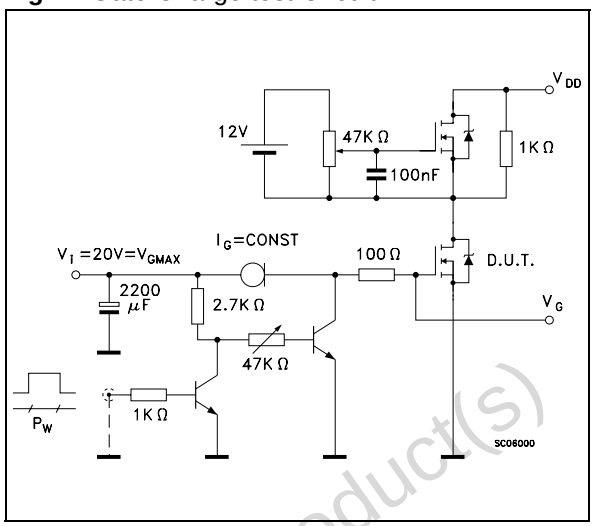

Fig. 3: Test Circuit For Diode Recovery Behaviour

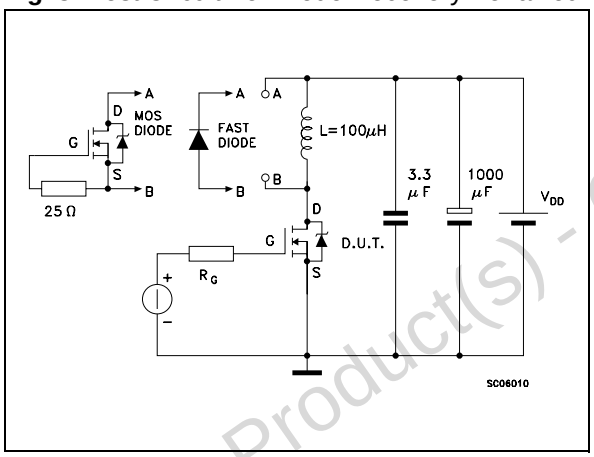

Obsolete Product(s) - Obsolete Product(s)

SO-8 MECHANICAL DATA

DIM.	mm			inch		
	MIN.	TYP.	MAX.	MIN.	TYP.	MAX.
A			1.75			0.068
a1	0.1		0.25	0.003		0.009
a2			1.65			0.064
a3	0.65		0.85	0.025		0.033
b	0.35		0.48	0.013		0.018
b1	0.19		0.25	0.007		0.010
C	0.25		0.5	0.010		0.019
c1	45 (typ.)					
D	4.8		5.0	0.188		0.196
E	5.8		6.2	0.228		0.244
e		1.27			0.050	
e3		3.81			0.150	
F	3.8		4.0	0.14		0.157
L	0.4		1.27	0.015		0.050
M			0.6			0.023
S	8 (max.)					

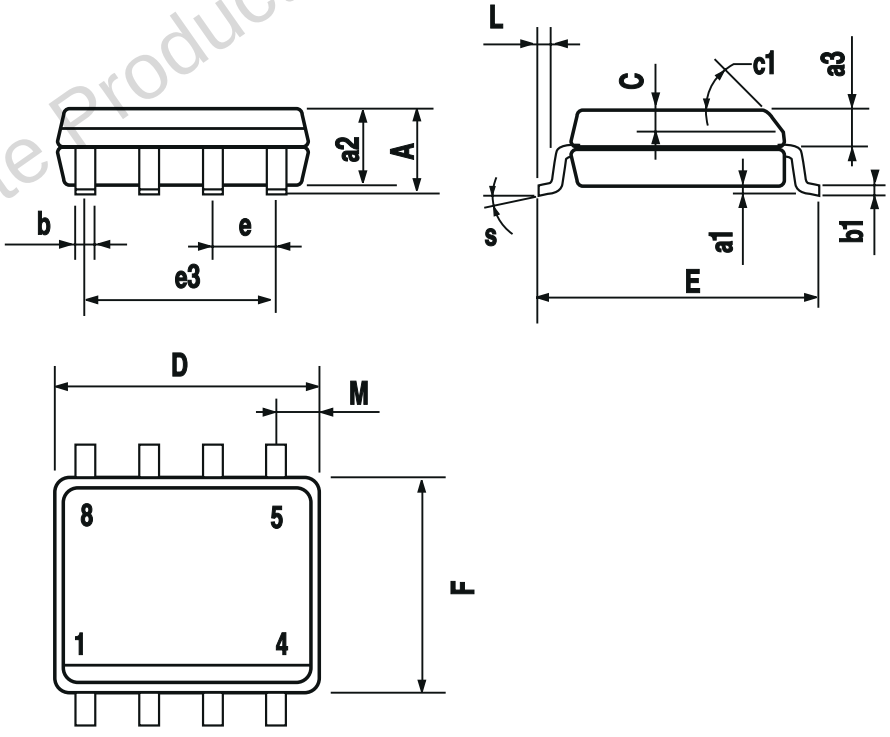

0016023

Obsolete Product(s) - Obsolete Product(s)

Obsolete Product(s) - Obsolete Product(s)

Information furnished is believed to be accurate and reliable. However, STMicroelectronics assumes no responsibility for the consequences of use of such information nor for any infringement of patents or other rights of third parties which may result from its use. No license is granted by implication or otherwise under any patent or patent rights of STMicroelectronics. Specifications mentioned in this publication are subject to change without notice. This publication supersedes and replaces all information previously supplied. STMicroelectronics products are not authorized for use as critical components in life support devices or systems without express written approval of STMicroelectronics.

The ST logo is registered trademark of STMicroelectronics
® 2001 STMicroelectronics - All Rights Reserved

All other names are the property of their respective owners.

STMicroelectronics GROUP OF COMPANIES
Australia - Brazil - Canada - China - Finland - France - Germany - Hong Kong - India - Israel - Italy - Japan - Malaysia - Malta - Morocco - Singapore - Spain - Sweden - Switzerland - United Kingdom - United States.

http://www.st.com