STS4DNFS30L

N-channel 30 V, 0.044 Ω, 4 A SO-8 STripFET™ MOSFET plus SCHOTTKY rectifier

Features

MOSFET	V_{DSS}	$R_{DS(on)}$	I_D
	30V	<0.056Ω	4A
SCHOTTKY	$I_{F(AV)}$	V_{RRM}	$V_{F(MAX)}$
	3A	30V	0.51V

- Standard outline for easy automated surface mount assembly
- Low threshold gate drive
- Integrated SCHOTTKY rectifier

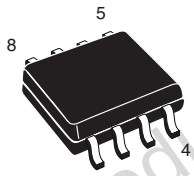

S0-8

Figure 1. Internal schematic diagram

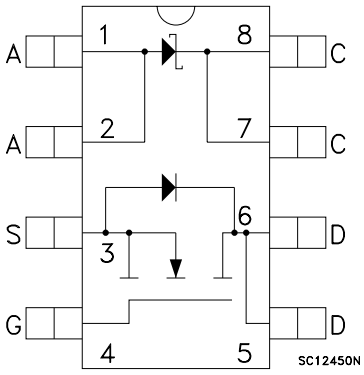

Applications

- Switching applications

Description

This device is an N-channel Power MOSFET. It associates the latest low voltage STripFET™ in N-channel version to a low drop Schottky diode. Such configuration is extremely versatile in implementing, a large variety of DC-DC converters for printers, portable equipment, and cellular phones.

Obsolete Product(s) - Obsolete Product(s)

Table 1. Device summary

Order code	Marking	Package	Packaging
STS4DNFS30L	4DFS30L	SO-8	Tape and reel

Contents

1 Electrical ratings 3

2 Electrical characteristics 4

2.1 Electrical characteristics (curves) 6

3 Test circuit 8

4 Package mechanical data 9

5 Revision history 12

Obsolete Product(s) - Obsolete Product(s)

1 Electrical ratings

Table 2. Absolute maximum ratings

Symbol	Parameter	Value	Unit
V_{DS}	Drain-source voltage (v_{gs} = 0)	30	V
V_{DGR}	Drain-gate voltage (R_{GS} = 20 kΩ)	30	V
V_{GS}	Gate- source voltage	±16	V
I_D	Drain current (continuous) at T_C = 25°C	4	A
I_D	Drain current (continuous) at T_C = 100°C	2.5	A
I_{DM} (1)	Drain current (pulsed)	16	A
P_{TOT}	Total dissipation at T_C = 25°C dual operation	2	W

1. Pulse width limited by safe operating area.

Table 3. Schottky absolute maximum ratings

Symbol	Parameter		Value	Unit
V_{RRM}	Repetitive peak reverse voltage		30	V
$I_{F(RMS)}$	RMS forward current		20	A
$I_{F(AV)}$	Average forward current	TL=125°C δ=0.5	3	A
I_{FSM}	Surge non repetitive forward current	tp = 10 ms Sinusoidal	75	A
I_{RRM}	Repetitive peak reverse current	tp = 2 µs F=1 kHz	1	A
I_{RSM}	Non repetitive peak reverse current	tp = 100 µs	1	A
dv/dt	Critical rate of rise of reverse voltage		10000	V/µs

Table 4. Thermal data

Symbol	Parameter	Value	Unit
R_{thj-a}	Thermal resistance junction-ambient MOSFET(1)	62.5	°C/W °C/W
T_J	Junction temperature	-55 to 150	°C
T_{stg}	Storage temperature range	-55 to 150	°C

1. Mounted on FR-4 board (steady state).

Obsolete Product(s) - Obsolete Product(s)

2 Electrical characteristics

(T_{CASE}=25°C unless otherwise specified).

Table 5. On/off states

Symbol	Parameter	Test conditions	Min.	Typ.	Max.	Unit
$V_{(BR)DSS}$	Drain-source Breakdown voltage	I_D = 250 µA, V_{GS} = 0	30			V
I_{DSS}	Zero gate voltage Drain current (V_{GS} = 0)	V_{DS} = Max rating			1	µA
		V_{DS}=Max rating, T_C=125°C			10	µA
I_{GSS}	Gate-body leakage current (V_{DS} = 0)	V_{GS} = ±16V			±100	nA
$V_{GS(th)}$	Gate threshold voltage	V_{DS} = V_{GS}, I_D = 250µA	1			V
$R_{DS(on)}$	Static drain-source on resistance	V_{GS} = 10V, I_D = 2A		0.044	0.055	Ω
		V_{GS} = 5V, I_D = 2A		0.051	0.065	Ω

Table 6. Dynamic

Symbol	Parameter	Test conditions	Min.	Typ.	Max.	Unit
g_{fs} (1)	Forward transconductance	V_{DS}= 15V, I_D=2A		5		S
C_{iss}	Input capacitance	V_{DS} = 25V, f = 1 MHz, V_{GS} = 0		330		pF
C_{oss}	Output capacitance			90		pF
C_{rss}	Reverse transfer capacitance			40		pF
Q_g	Total gate charge	V_{DD} = 24V, I_D = 4A, V_{GS} = 5V		6.5	9	nC
Q_{gs}	Gate-source charge			3.6		nC
Q_{gd}	Gate-drain charge			2		nC

1. Pulsed: Pulse duration = 300 µs, duty cycle 1.5.

Table 7. Switching times

Symbol	Parameter	Test conditions	Min.	Typ.	Max.	Unit
$t_{d(on)}$	Turn-on delay time	V_{DD}=15 V, I_D=2A, R_G=4.7Ω, V_{GS}=5V (see Figure 13)		11		ns
t_r	Rise time			100		ns
$t_{d(off)}$	Turn-off delay time	V_{DD}=15 V, I_D=2A, R_G=4.7Ω, V_{GS}=5V (see Figure 13)		25		ns
t_f	Fall time			22		ns

Obsolete Product(s) - Obsolete Product(s)

Table 8. Source drain diode

Symbol	Parameter	Test conditions	Min	Typ.	Max	Unit
I_{SD}	Source-drain current				4	A
I_{SDM} (1)	Source-drain current (pulsed)				16	A
V_{SD} (2)	Forward on voltage	I_{SD} = 4A, V_{GS} = 0			1.2	V
t_{rr} Q_{rr} I_{RRM}	Reverse recovery time Reverse recovery charge Reverse recovery current	I_{SD} = 4A, V_{DD} = 15V di/dt = 100A/µs, T_j = 150°C (see Figure 15)		35 25 1.4		ns nC A

1. Pulse width limited by safe operating area.
2. Pulsed: Pulse duration = 300 µs, duty cycle 1.5%

Obsolete Product(s) - Obsolete Product(s)

2.1 Electrical characteristics (curves)

Figure 2. Safe operating area

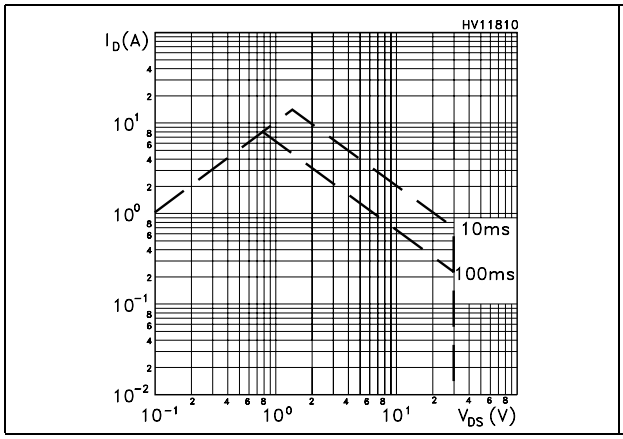

Figure 3. Thermal impedance

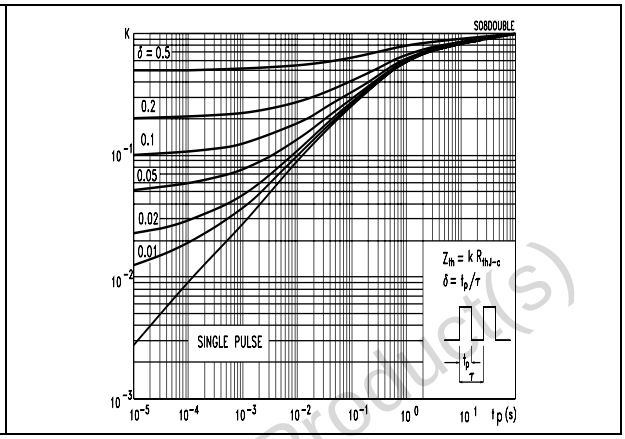

Figure 4. Output characteristics

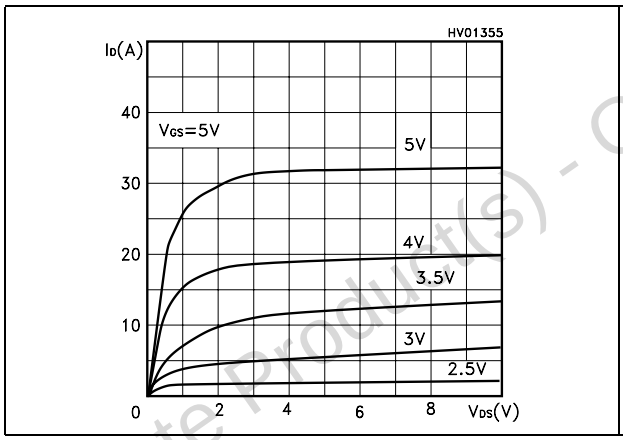

Figure 5. Transfer characteristics

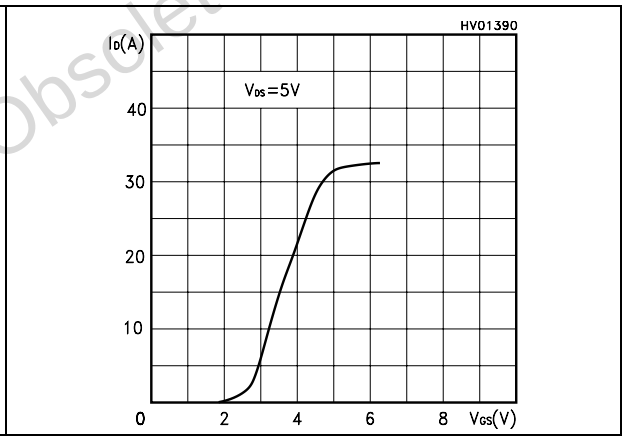

Figure 6. Transconductance

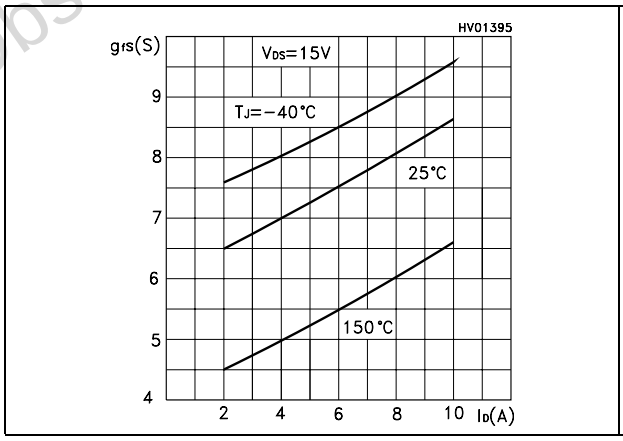

Figure 7. Static drain-source on resistance

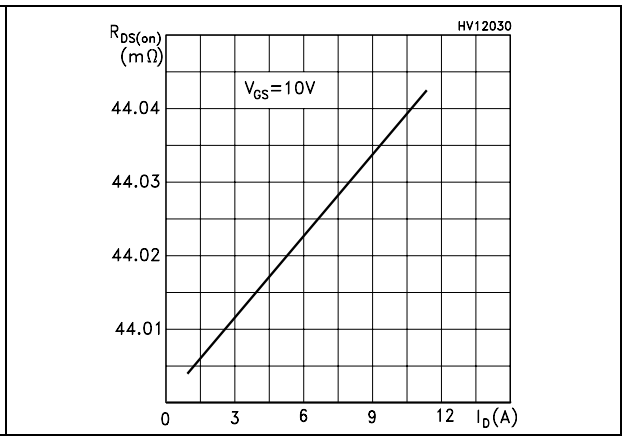

Obsolete Product(s) - Obsolete Product(s)

Figure 8. Gate charge vs. gate-source voltage

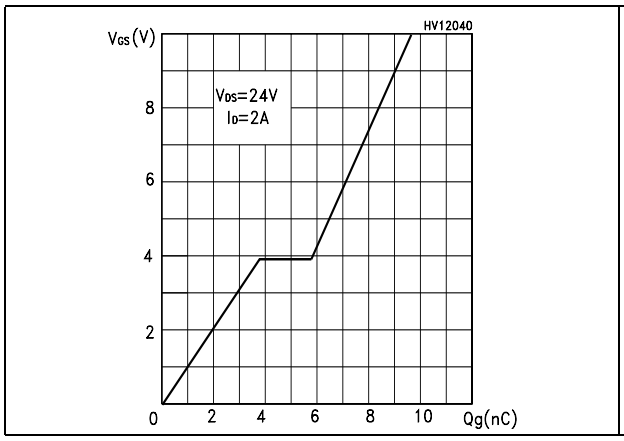

Figure 9. Capacitance variations

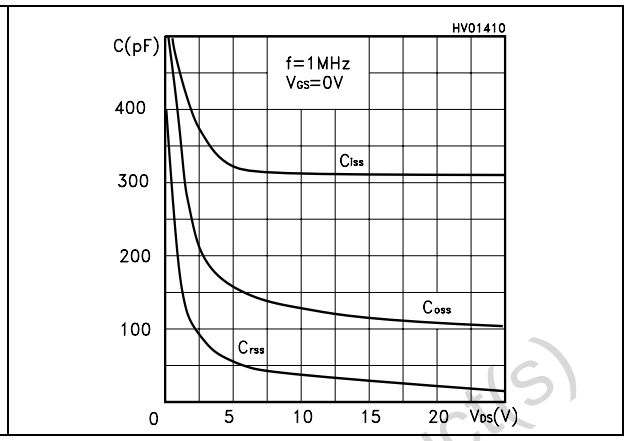

Figure 10. Normalized gate threshold voltage vs. temperature

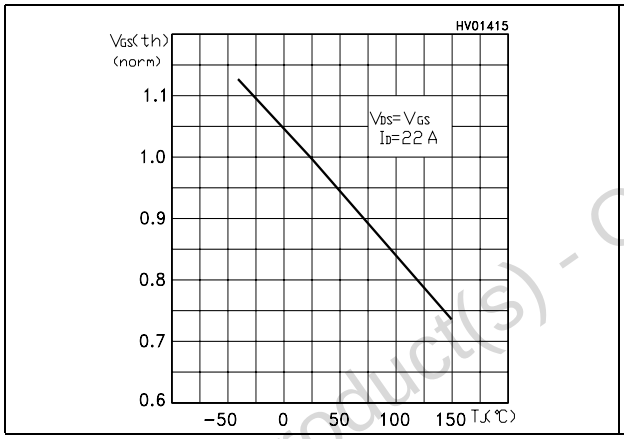

Figure 11. Normalized on resistance vs. temperature

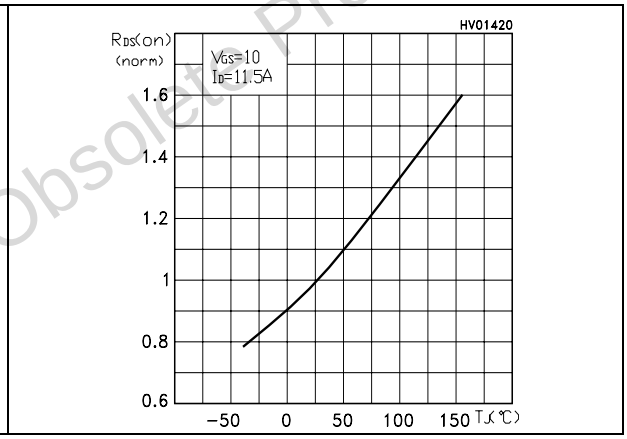

Figure 12. Source-drain diode forward characteristics

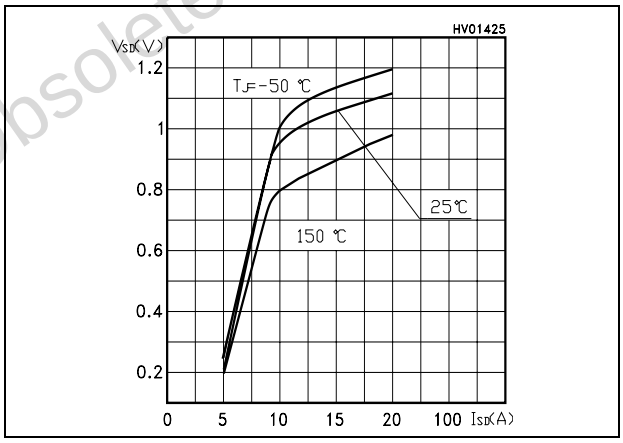

Obsolete Product(s) - Obsolete Product(s)

3 Test circuit

Figure 13. Switching times test circuit for resistive load

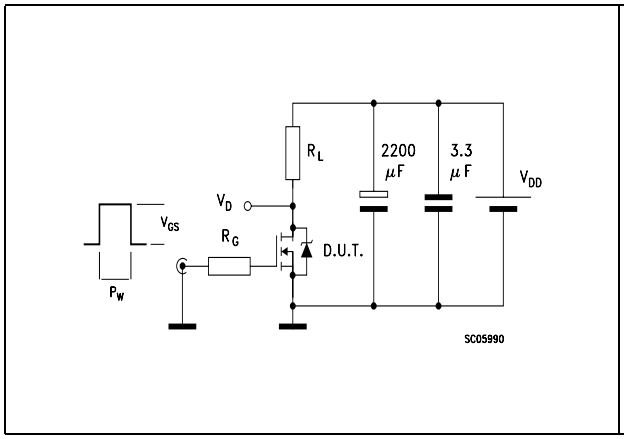

Figure 14. Gate charge test circuit

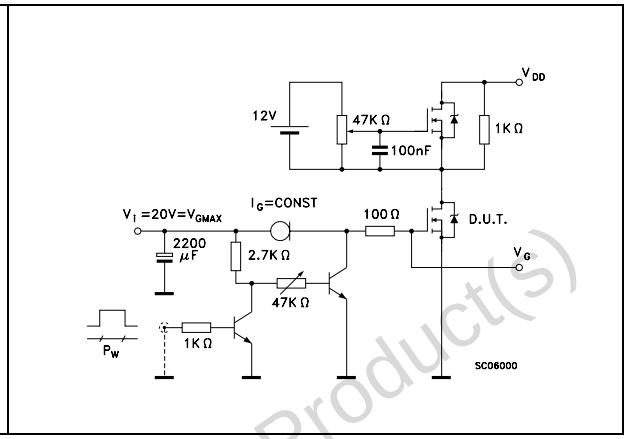

Figure 15. Test circuit for inductive load switching and diode recovery times

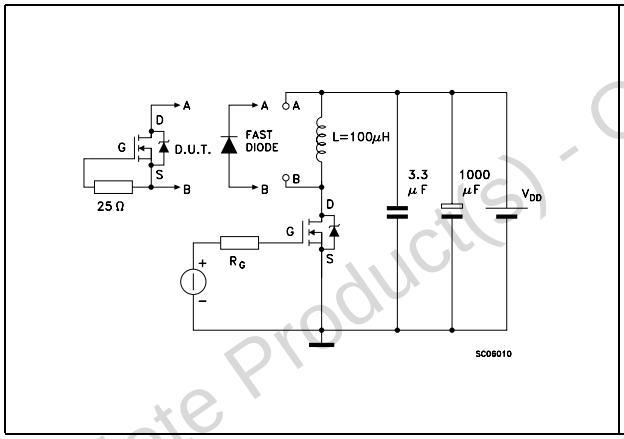

Figure 16. Unclamped Inductive load test circuit

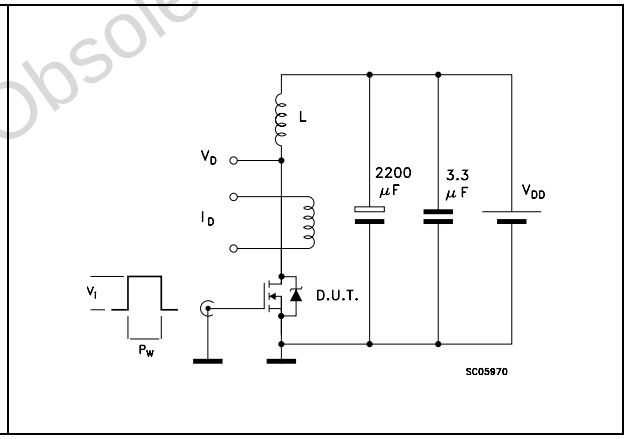

Figure 17. Unclamped inductive waveform

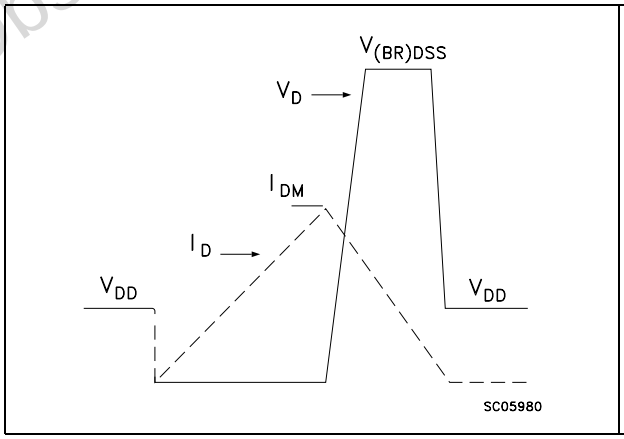

Figure 18. Switching time waveform

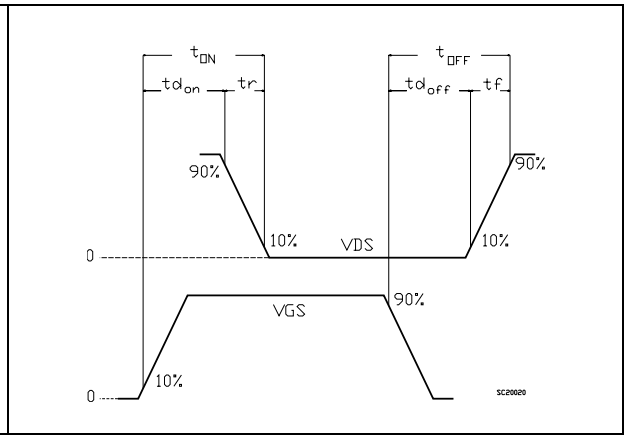

Obsolete Product(s) - Obsolete Product(s)

4 Package mechanical data

In order to meet environmental requirements, ST offers these devices in different grades of ECOPACK® packages, depending on their level of environmental compliance. ECOPACK® specifications, grade definitions and product status are available at: www.st.com. ECOPACK is an ST trademark.

Obsolete Product(s) - Obsolete Product(s)

Table 9. SO-8 mechanical data

Dim.	mm		
	Min.	Typ.	Max.
A			1.75
A1	0.10		0.25
A2	1.25		
b	0.28		0.48
c	0.17		0.23
D	4.80	4.90	5.00
E	5.80	6.00	6.20
E1	3.80	3.90	4.00
e		1.27	
h	0.25		0.50
L	0.40		1.27
L1		1.04	
k	0°		8°
ccc			0.10

Obsolete Product(s) - Obsolete Product(s)

Figure 19. SO-8 drawing

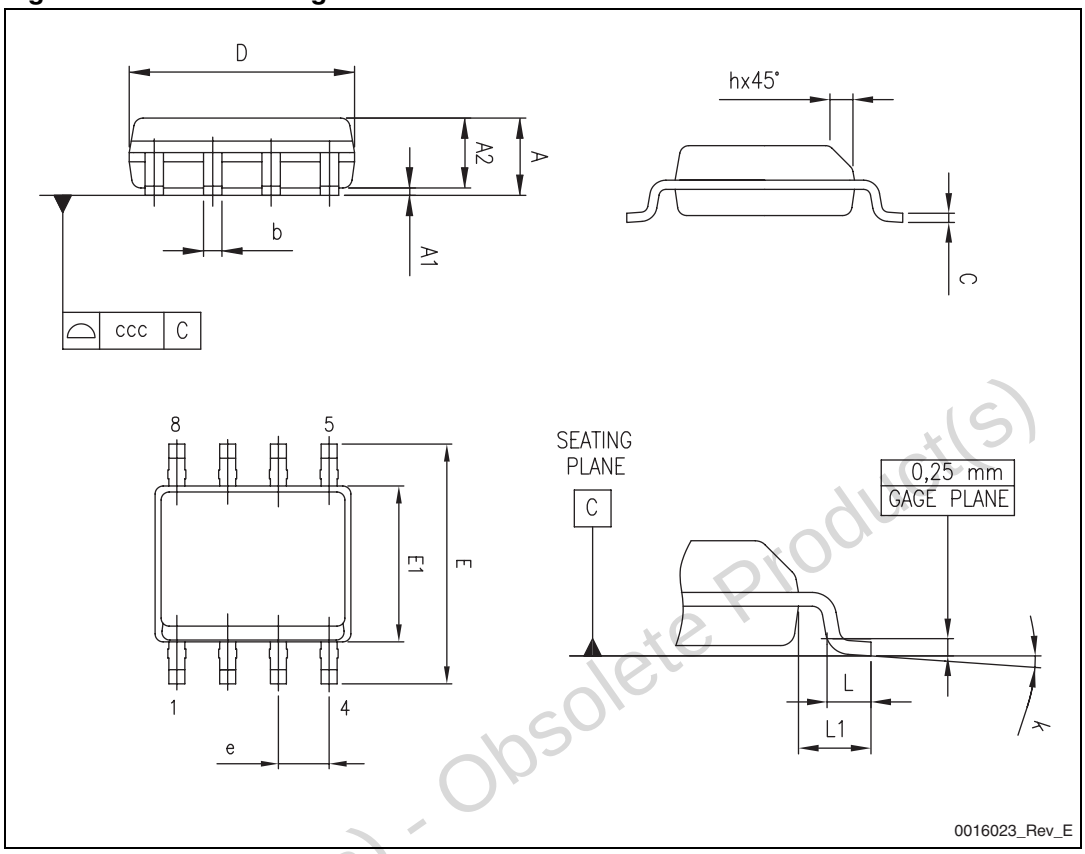

Obsolete Product(s) - Obsolete Product(s)

5 Revision history

Table 10. Document revision history

Date	Revision	Changes
21-Jun-2004	2	Complete version
10-Nov-2006	3	The document has been reformatted
26-Jan-2007	4	Typo mistakes on *Table 2*.
29-Jun-2011	5	Modified marking in *Table 1*. Updated mechanical data.

Obsolete Product(s) - Obsolete Product(s)

Obsolete Product(s) - Obsolete Product(s)

Please Read Carefully:

Information in this document is provided solely in connection with ST products. STMicroelectronics NV and its subsidiaries (“ST”) reserve the right to make changes, corrections, modifications or improvements, to this document, and the products and services described herein at any time, without notice.

All ST products are sold pursuant to ST’s terms and conditions of sale.

Purchasers are solely responsible for the choice, selection and use of the ST products and services described herein, and ST assumes no liability whatsoever relating to the choice, selection or use of the ST products and services described herein.

No license, express or implied, by estoppel or otherwise, to any intellectual property rights is granted under this document. If any part of this document refers to any third party products or services it shall not be deemed a license grant by ST for the use of such third party products or services, or any intellectual property contained therein or considered as a warranty covering the use in any manner whatsoever of such third party products or services or any intellectual property contained therein.

UNLESS OTHERWISE SET FORTH IN ST’S TERMS AND CONDITIONS OF SALE ST DISCLAIMS ANY EXPRESS OR IMPLIED WARRANTY WITH RESPECT TO THE USE AND/OR SALE OF ST PRODUCTS INCLUDING WITHOUT LIMITATION IMPLIED WARRANTIES OF MERCHANTABILITY, FITNESS FOR A PARTICULAR PURPOSE (AND THEIR EQUIVALENTS UNDER THE LAWS OF ANY JURISDICTION), OR INFRINGEMENT OF ANY PATENT, COPYRIGHT OR OTHER INTELLECTUAL PROPERTY RIGHT.

UNLESS EXPRESSLY APPROVED IN WRITING BY AN AUTHORIZED ST REPRESENTATIVE, ST PRODUCTS ARE NOT RECOMMENDED, AUTHORIZED OR WARRANTED FOR USE IN MILITARY, AIR CRAFT, SPACE, LIFE SAVING, OR LIFE SUSTAINING APPLICATIONS, NOR IN PRODUCTS OR SYSTEMS WHERE FAILURE OR MALFUNCTION MAY RESULT IN PERSONAL INJURY, DEATH, OR SEVERE PROPERTY OR ENVIRONMENTAL DAMAGE. ST PRODUCTS WHICH ARE NOT SPECIFIED AS "AUTOMOTIVE GRADE" MAY ONLY BE USED IN AUTOMOTIVE APPLICATIONS AT USER’S OWN RISK.

Resale of ST products with provisions different from the statements and/or technical features set forth in this document shall immediately void any warranty granted by ST for the ST product or service described herein and shall not create or extend in any manner whatsoever, any liability of ST.

ST and the ST logo are trademarks or registered trademarks of ST in various countries.

Information in this document supersedes and replaces all information previously supplied.

The ST logo is a registered trademark of STMicroelectronics. All other names are the property of their respective owners.

© 2011 STMicroelectronics - All rights reserved

STMicroelectronics group of companies

Australia - Belgium - Brazil - Canada - China - Czech Republic - Finland - France - Germany - Hong Kong - India - Israel - Italy - Japan - Malaysia - Malta - Morocco - Philippines - Singapore - Spain - Sweden - Switzerland - United Kingdom - United States of America

www.st.com