STPS41L30CG/CT/CR

LOW DROP POWER SCHOTTKY RECTIFIER

MAIN PRODUCTS CHARACTERISTICS

$I_{F(AV)}$	2 x 20 A
V_{RRM}	30 V
Tj (max)	150 °C
V_F (max)	0.38 V

FEATURES AND BENEFITS

- VERY SMALL CONDUCTION LOSSES
- NEGLIGIBLE SWITCHING LOSSES
- EXTREMELY FAST SWITCHING
- LOW FORWARD VOLTAGE DROP
- HIGH AVALANCHE CAPABILITY
- LOW THERMAL RESISTANCE
- AVALANCHE CAPABILITY SPECIFIED

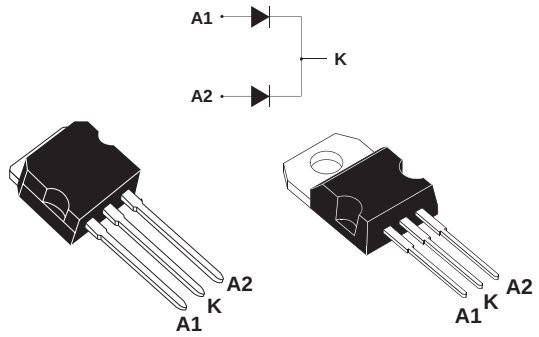

I^2PAK
STPS41L30CR

TO-220AB
STPS41L30CT

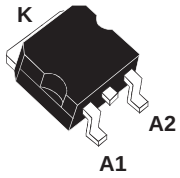

D^2PAK
STPS41L30CG

DESCRIPTION

Dual center tab Schottky rectifier suited for Switch Mode Power Supply and high frequency DC to DC converters.

Packaged in D^2PAK, I^2PAK and TO-220ABthis device is intended for use in low voltage, high frequency inverters, free-wheeling and polarity protection applications.

ABSOLUTE RATINGS (limiting values, per diode)

Symbol	Parameter			Value	Unit
V_{RRM}	Repetitive peak reverse voltage			30	V
$I_{F(RMS)}$	RMS forward current			30	A
$I_{F(AV)}$	Average forward current	Tc = 135°C δ = 0.5	Per diode Per device	20 40	A
I_{FSM}	Surge non repetitive forward current	tp = 10 ms sinusoidal		220	A
I_{RRM}	Peak repetitive reverse current	tp=2 µs square F=1kHz		1	A
P_{ARM}	Repetitive peak avalanche power	tp = 1µs Tj = 25°C		6500	W
T_{stg}	Storage temperature range			- 65 to + 175	°C
Tj	Maximum operating junction temperature *			150	°C
dV/dt	Critical rate of rise reverse voltage			10000	V/µs

* : $\frac{dPtot}{dTj} < \frac{1}{Rth(j-a)}$ thermal runaway condition for a diode on its own heatsink

THERMAL RESISTANCES

Symbol	Parameter		Value	Unit
$R_{th(j-c)}$	Junction to case	Per diode Total	1.5 0.8	°C/W
$R_{th(c)}$	Coupling		0.1	

When the diodes 1 and 2 are used simultaneously :
Δ Tj(diode 1) = P(diode1) x $R_{th(j-c)}$(Per diode) + P(diode 2) x $R_{th(c)}$

STATIC ELECTRICAL CHARACTERISTICS (per diode)

Symbol	Parameter	Tests Conditions		Min.	Typ.	Max.	Unit
I_R *	Reverse leakage current	Tj = 25°C	$V_R = V_{RRM}$			1.5	mA
		Tj = 125°C			170	350	mA
V_F *	Forward voltage drop	Tj = 25°C	I_F = 20 A			0.48	V
		Tj = 125°C	I_F = 20 A		0.35	0.38	
		Tj = 25°C	I_F = 40 A			0.57	
		Tj = 125°C	I_F = 40 A		0.47	0.49	

Pulse test : * tp = 380 µs, δ < 2%

To evaluate the conduction losses use the following equation :
$P = 0.27 \times I_{F(AV)} + 0.0055\ I_F{}^2{}_{(RMS)}$

Fig. 1: Conduction losses versus average current.

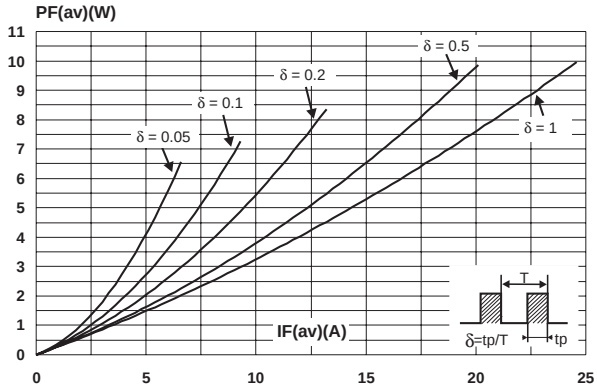

Fig. 2: Average forward current versus ambient temperature (δ = 0.5).

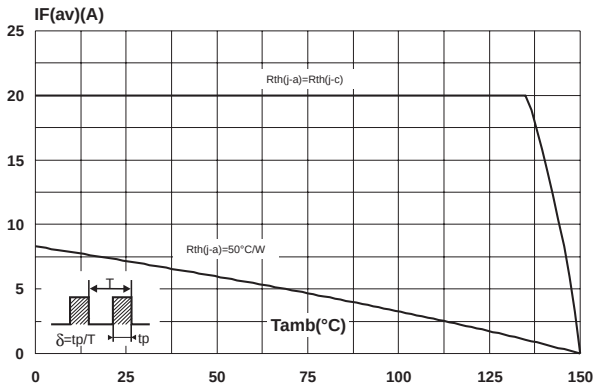

Fig. 3: Normalized avalanche power derating versus pulse duration.

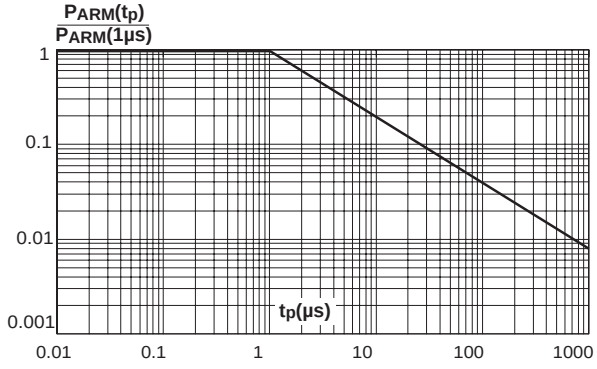

Fig. 4: Normalized avalanche power derating versus junction temperature.

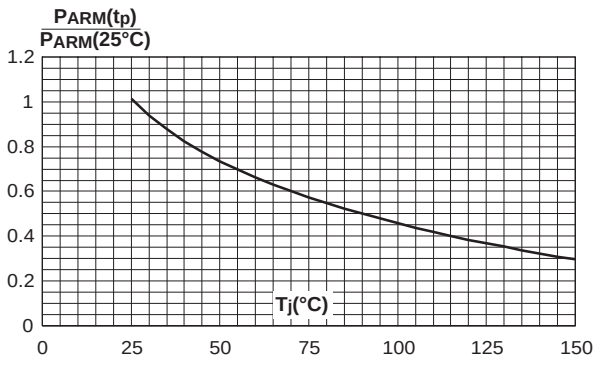

Fig. 5: Non repetitive surge peak forward current versus overload duration (maximum values).

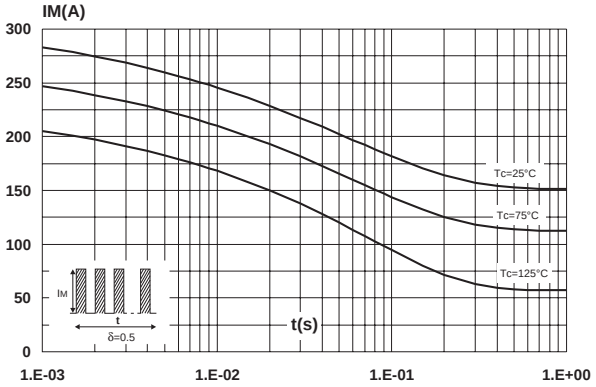

Fig. 6: Relative variation of thermal impedance junction to case versus pulse duration.

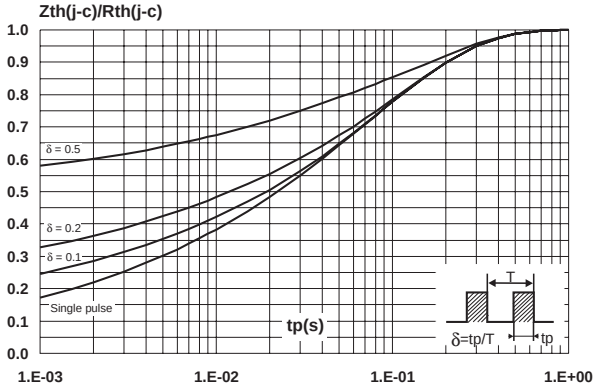

Fig. 7: Reverse leakage current versus reverse voltage applied (typical values).

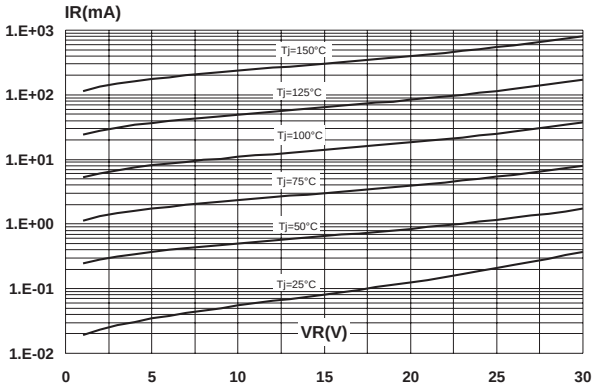

Fig. 8: Junction capacitance versus reverse voltage applied (typical values).

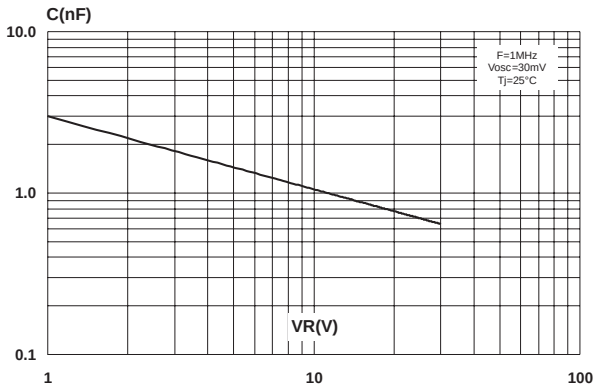

Fig. 9: Forward voltage drop versus forward current.

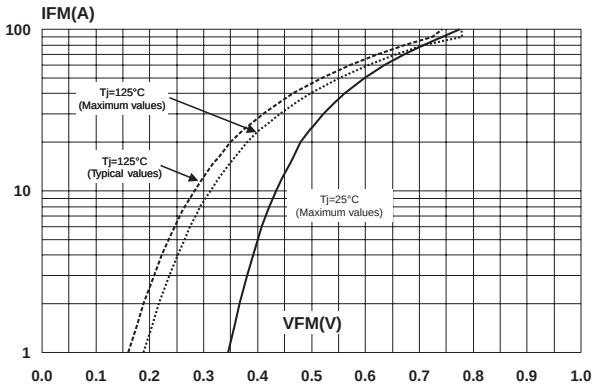

Fig. 10: Thermal resistance junction to ambient versus copper surface under tab (epoxy printed board FR4, Cu = 35µm) (STPS41L30CG only).

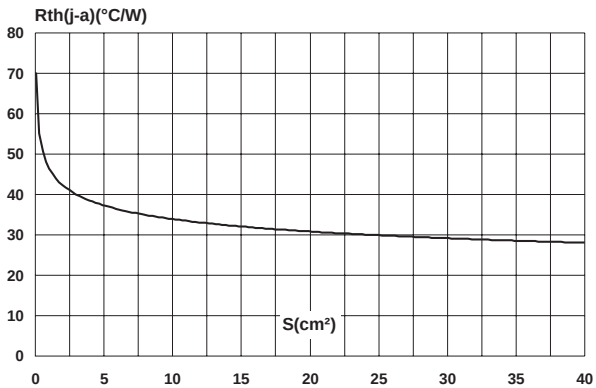

PACKAGE MECHANICAL DATA

D^2PAK

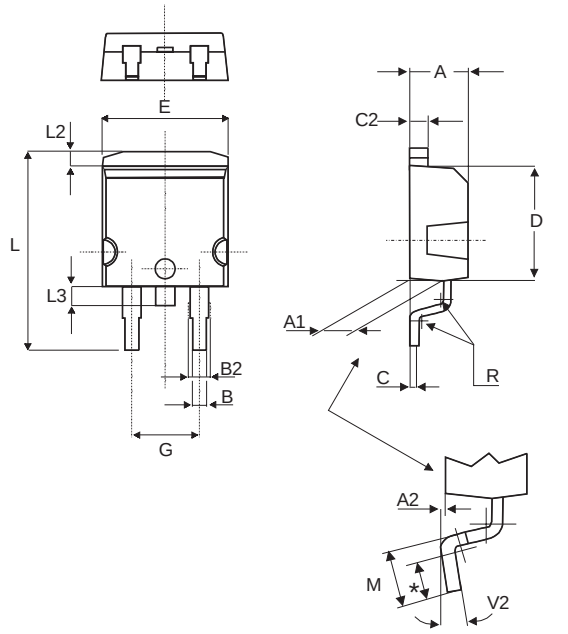

* FLAT ZONE NO LESS THAN 2mm

REF.	DIMENSIONS			
	Millimeters		Inches	
	Min.	Max.	Min.	Max.
A	4.40	4.60	0.173	0.181
A1	2.49	2.69	0.098	0.106
A2	0.03	0.23	0.001	0.009
B	0.70	0.93	0.027	0.037
B2	1.14	1.70	0.045	0.067
C	0.45	0.60	0.017	0.024
C2	1.23	1.36	0.048	0.054
D	8.95	9.35	0.352	0.368
E	10.00	10.40	0.393	0.409
G	4.88	5.28	0.192	0.208
L	15.00	15.85	0.590	0.624
L2	1.27	1.40	0.050	0.055
L3	1.40	1.75	0.055	0.069
M	2.40	3.20	0.094	0.126
R	0.40 typ.		0.016 typ.	
V2	0°	8°	0°	8°

FOOTPRINT (dimensions in mm)

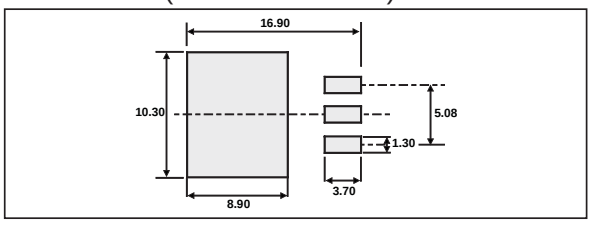

PACKAGE MECHANICAL DATA

I^2PAK

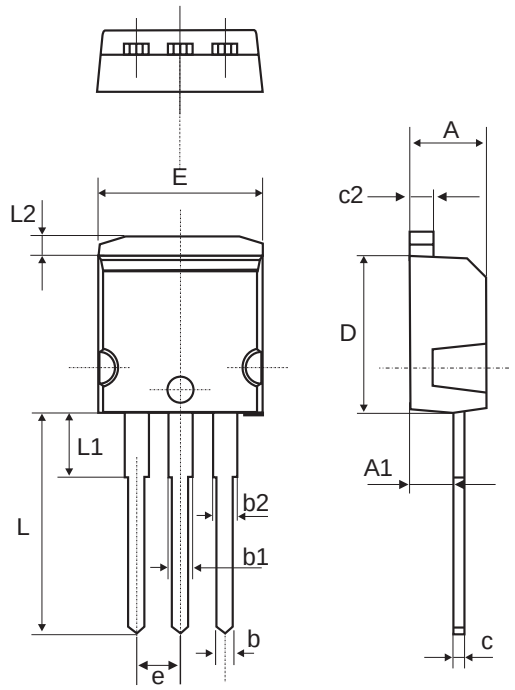

REF.	DIMENSIONS			
	Millimeters		Inches	
	Min.	Max.	Min.	Max.
A	4.40	4.60	0.173	0.181
A1	2.49	2.69	0.098	0.106
b	0.70	0.93	0.028	0.037
b1	1.14	1.17	0.044	0.046
b2	1.14	1.17	0.044	0.046
c	0.45	0.60	0.018	0.024
c2	1.23	1.36	0.048	0.054
D	8.95	9.35	0.352	0.368
e	2.40	2.70	0.094	0.106
E	10.0	10.4	0.394	0.409
L	13.1	13.6	0.516	0.535
L1	3.48	3.78	0.137	0.149
L2	1.27	1.40	0.050	0.055

PACKAGE MECHANICAL DATA

TO-220AB

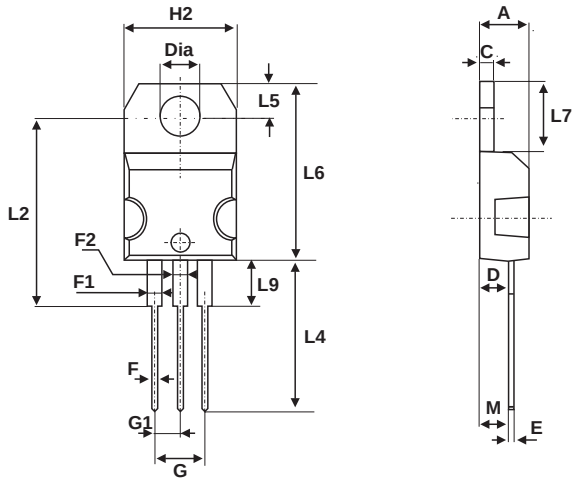

REF.	DIMENSIONS			
	Millimeters		Inches	
	Min.	Max.	Min.	Max.
A	4.40	4.60	0.173	0.181
C	1.23	1.32	0.048	0.051
D	2.40	2.72	0.094	0.107
E	0.49	0.70	0.019	0.027
F	0.61	0.88	0.024	0.034
F1	1.14	1.70	0.044	0.066
F2	1.14	1.70	0.044	0.066
G	4.95	5.15	0.194	0.202
G1	2.40	2.70	0.094	0.106
H2	10	10.40	0.393	0.409
L2	16.4 typ.		0.645 typ.	
L4	13	14	0.511	0.551
L5	2.65	2.95	0.104	0.116
L6	15.25	15.75	0.600	0.620
L7	6.20	6.60	0.244	0.259
L9	3.50	3.93	0.137	0.154
M	2.6 typ.		0.102 typ.	
Diam.	3.75	3.85	0.147	0.151

Ordering type	Marking	Package	Weight	Base qty	Delivery mode
STPS41L30CG	STPS41L30CG	D^2PAK	1.48 g	50	Tube
STPS41L30CG-TR	STPS41L30CG	D^2PAK	1.48 g	1000	Tape & reel
STPS41L30CT	STPS41L30CT	TO-220AB	2.20 g	50	Tube
STPS41L30CR	STPS41L30CR	I^2PAK	1.49 g	50	Tube

- EPOXY MEETS UL94,V0

Information furnished is believed to be accurate and reliable. However, STMicroelectronics assumes no responsibility for the consequences of use of such information nor for any infringement of patents or other rights of third parties which may result from its use. No license is granted by implication or otherwise under any patent or patent rights of STMicroelectronics. Specifications mentioned in this publication are subject to change without notice. This publication supersedes and replaces all information previously supplied.
STMicroelectronics products are not authorized for use as critical components in life support devices or systems without express written approval of STMicroelectronics.

The ST logo is a registered trademark of STMicroelectronics

© 2003 STMicroelectronics - Printed in Italy - All rights reserved.

STMicroelectronics GROUP OF COMPANIES
Australia - Brazil - Canada - China - Finland - France - Germany
Hong Kong - India - Israel - Italy - Japan - Malaysia - Malta - Morocco - Singapore
Spain - Sweden - Switzerland - United Kingdom - United States.

http://www.st.com