STB60NF06L
STP60NF06L - STP60NF06LFP

N-channel 60V - 0.012Ω - 60A - TO-220/D²PAK/TO-220FP
STripFET™ II Power MOSFET

General features

Type	V_{DSS}	$R_{DS(on)}$	I_D
STB60NF06L	60V	<0.014Ω	60
STP60NF06L	60V	<0.014Ω	60A
STP60NF06LFP	60V	<0.014Ω	60A(1)

1. Refer to SOA for the max allowable current values on FP-type due to Rth value

- Exceptional dv/dt capability
- 100% avalanche tested
- Application oriented characterization
- 175°C operating range
- Low threshold drive

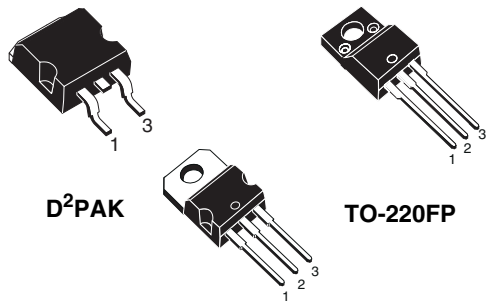

Internal schematic diagram

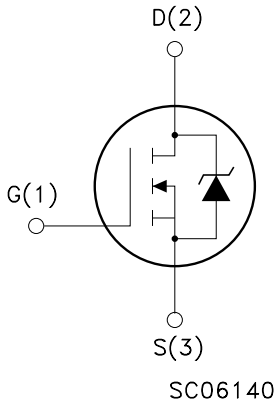

Description

This Power MOSFET series realized with STMicroelectronics unique STripFET process has specifically been designed to minimize input capacitance and gate charge. It is therefore suitable as primary switch in advanced high-efficiency isolated DC-DC converters for Telecom and Computer application. It is also intended for any application with low gate charge drive requirements.

Applications

- Switching application

Order codes

Part number	Marking	Package	Packaging
STB60NF06LT4	B60NF06L	D²PAK	Tape & reel
STP60NF06L	P60NF06L	TO-220	Tube
STP60NF06LFP	P60NF06LFP	TO-220FP	Tube

Contents

1 Electrical ratings 3

2 Electrical characteristics 4

2.1 Electrical characteristics (curves) 6

3 Test circuit 9

4 Package mechanical data 10

5 Packing mechanical data 14

6 Revision history 15

1 Electrical ratings

Table 1. Absolute maximum ratings

Symbol	Parameter	Value		Unit
		D^2PAK TO-220	TO-220FP	
V_{DS}	Drain-source voltage (V_{GS} = 0)	60		V
V_{DGR}	Drain-gate voltage (R_{GS} = 20 kΩ)	60		V
V_{GS}	Gate- source voltage	± 15		V
I_D	Drain current (continuous) at T_C = 25°C	60	60(1)	A
I_D	Drain current (continuous) at T_C = 100°C	42	42(1)	A
I_{DM}(2)	Drain current (pulsed)	240	240(1)	A
P_{tot}	Total dissipation at T_C = 25°C	110	30	W
	Derating Factor	0.73	0.2	W/°C
dv/dt (3)	Peak diode recovery voltage slope	20		V/ns
E_{AS} (4)	Single pulse avalanche energy	320		mJ
V_{ISO}	Insulation withstand voltage (DC)	--	2000	V
T_{stg}	Storage temperature	-65 to 175		°C
T_j	Max. operating junction temperature			

1. Refer to SOA for the max allowable current values on FP-type due to Rth value
2. Pulse width limited by safe operating area.
3. I_{SD} ≤60A, di/dt ≤600A/µs, V_{DD} ≤48V, Tj ≤T_{JMAX}
4. Starting Tj = 25 °C, I_D = 30A, V_{DD} = 30V

Table 2. Thermal data

			D^2PAK TO-220	TO-220FP	
Rthj-case	Thermal resistance junction-case	Max	1.36	5.0	°C/W
Rthj-amb	Thermal resistance junction-ambient	Max	62.5		°C/W
Rthj-pcb	Thermal resistance junction-pcb(1)	Max	35		°C/W
T_l	Maximum lead temperature for soldering purpose		300		°C

1. Only for SMD, When mounted on 1 inch2 FR-4 board, 2 oz of Cu.

2 Electrical characteristics

(T_{CASE}=25°C unless otherwise specified)

Table 3. On/off states

Symbol	Parameter	Test conditions	Min.	Typ.	Max.	Unit
$V_{(BR)DSS}$	Drain-source breakdown voltage	I_D = 250µA, V_{GS} =0	60			V
I_{DSS}	Zero gate voltage drain current (V_{GS} = 0)	V_{DS} = Max rating V_{DS} = Max rating, T_C = 125°C			1 10	µA µA
I_{GSS}	Gate-body leakage current (V_{DS} = 0)	V_{GS} = ± 15V			±100	nA
$V_{GS(th)}$	Gate threshold voltage	V_{DS} = V_{GS}, I_D = 250µA	1			V
$R_{DS(on)}$	Static drain-source on resistance	V_{GS} = 5V, I_D = 30A V_{GS} = 10V, I_D = 30A		0.014 0.012	0.016 0.014	Ω Ω

Table 4. Dynamic

Symbol	Parameter	Test conditions	Min.	Typ.	Max.	Unit
g_{fs} (1)	Forward transconductance	V_{DS}= 15V, I_D = 30A		20		S
C_{iss} C_{oss} C_{rss}	Input capacitance Output capacitance Reverse transfer capacitance	V_{DS} = 25V, f = 1MHz, V_{GS} = 0		2000 360 125		pF pF pF
$t_{d(on)}$ t_r $t_{d(off)}$ t_f	Turn-on delay time Rise time Turn-off delay time Fall time	V_{DD} = 30V, I_D = 30A R_G = 4.7Ω V_{GS} = 4.5V (see *Figure 15*)		35 220 55 30		ns ns ns ns
Q_g Q_{gs} Q_{gd}	Total gate charge Gate-source charge Gate-drain charge	V_{DD} = 48V, I_D = 60A, V_{GS} = 4.5V, R_G = 4.7Ω (see *Figure 16*)		35 10 20	66	nC nC nC

1. Pulsed: Pulse duration = 300 µs, duty cycle 1.5 %.

Table 5. Source drain diode

Symbol	Parameter	Test conditions	Min.	Typ.	Max.	Unit
I_{SD} I_{SDM} (1)	Source-drain current Source-drain current (pulsed)				60 240	A A
V_{SD} (2)	Forward on voltage	I_{SD} = 60A, V_{GS} = 0			1.3	V
t_{rr} Q_{rr} I_{RRM}	Reverse recovery time Reverse recovery charge Reverse recovery current	I_{SD} = 60A, di/dt = 100A/µs, V_{DD} = 30V, T_j = 150°C (see *Figure 17*)		110 250 4.5		ns nC A

1. Pulse width limited by safe operating area.
2. Pulsed: Pulse duration = 300 µs, duty cycle 1.5 %

2.1 Electrical characteristics (curves)

Figure 1. Safe operating area

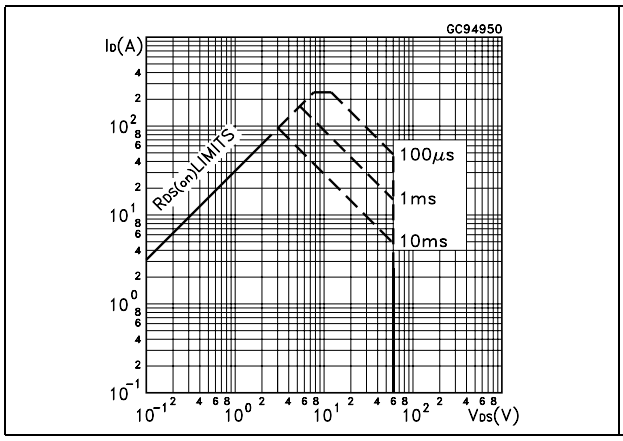

Figure 2. Thermal impedance

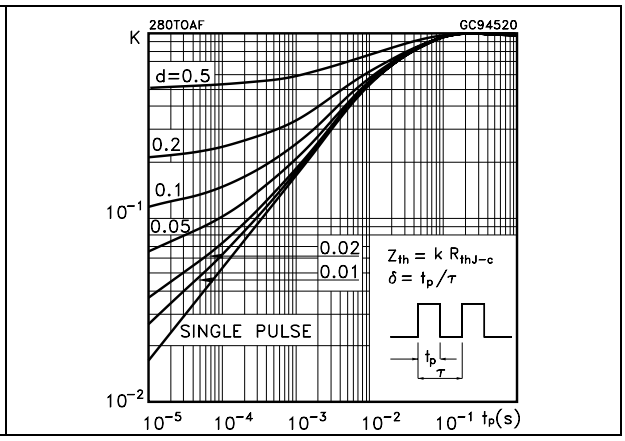

Figure 3. Safe operating area for TO-220FP

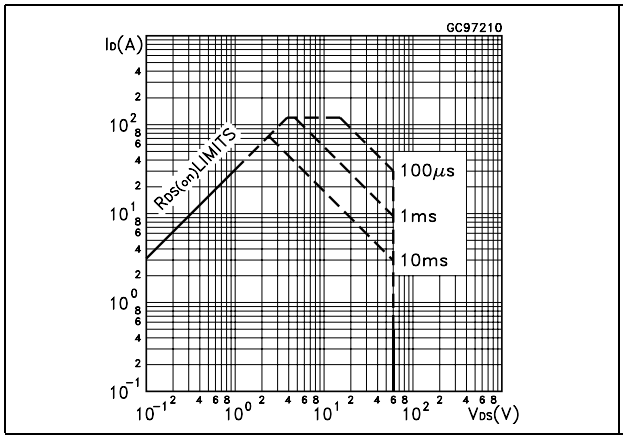

Figure 4. Thermal impedance for TO-220FP

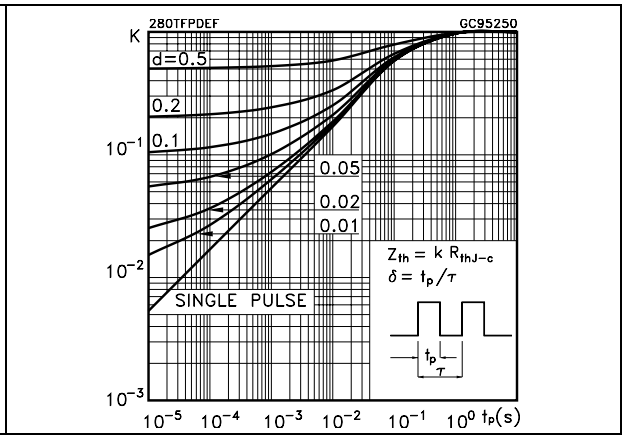

Figure 5. Output characterisics

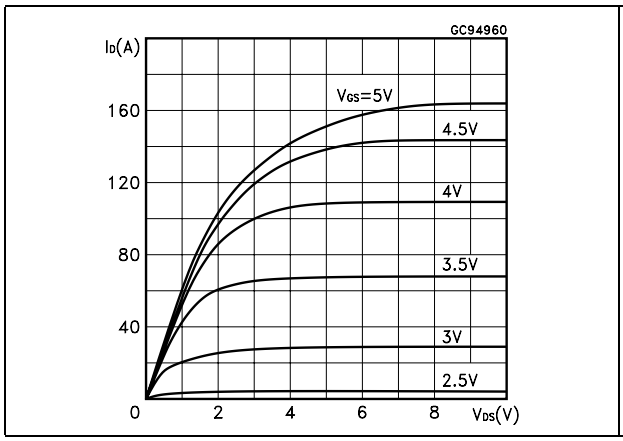

Figure 6. Transfer characteristics

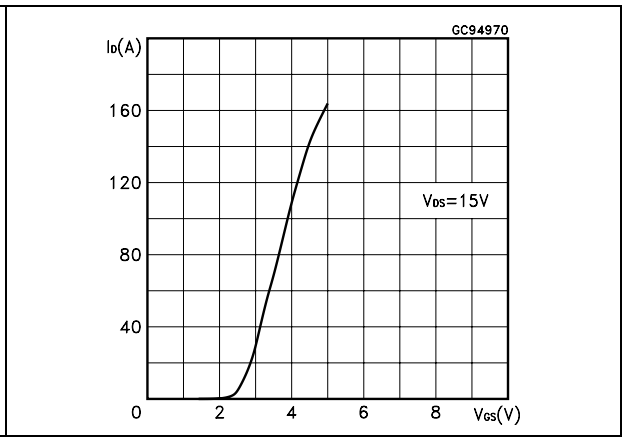

Figure 7. Transconductance

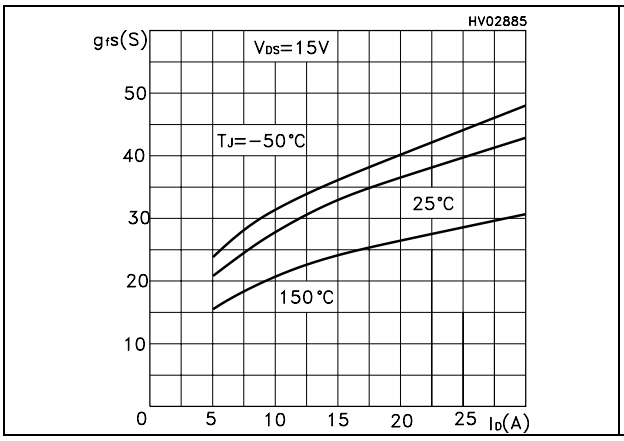

Figure 8. Static drain-source on resistance

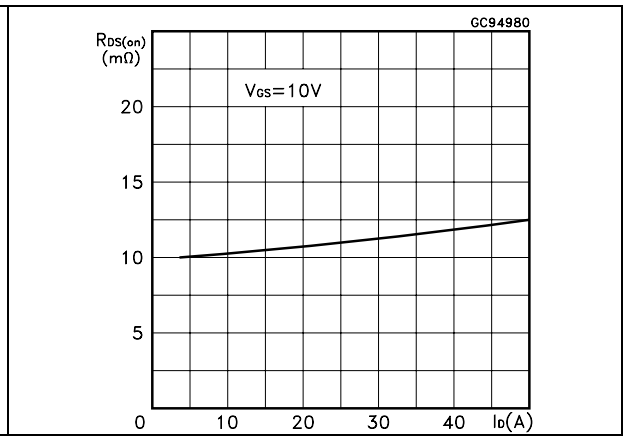

Figure 9. Gate charge vs gate-source voltage

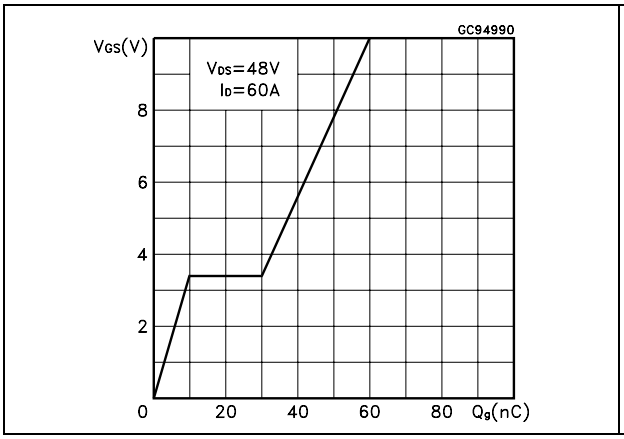

Figure 10. Capacitance variations

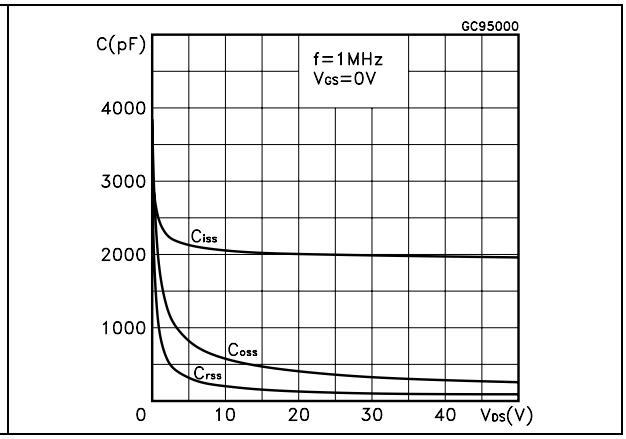

Figure 11. Normalized gate threshold voltage vs temperature

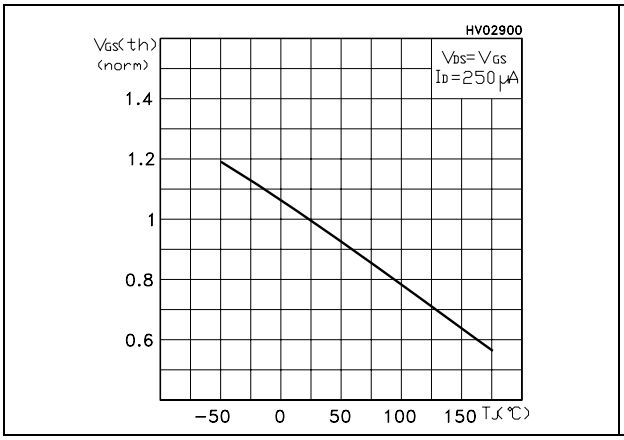

Figure 12. Normalized on resistance vs temperature

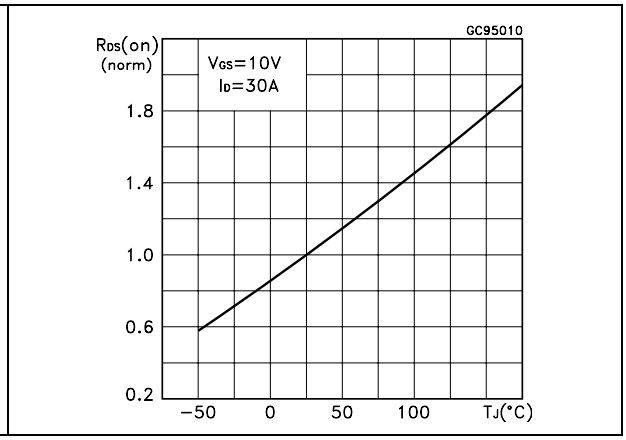

Figure 13. Source-drain diode forward characteristics

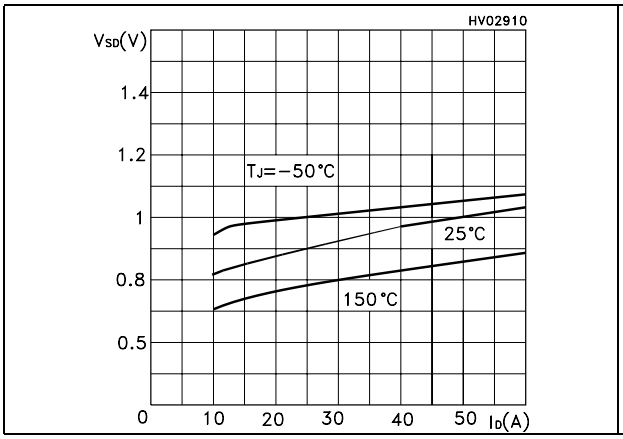

Figure 14. Normalized breakdown voltage temperature

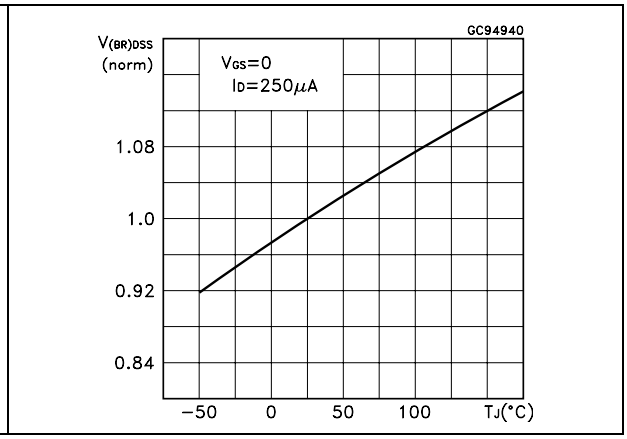

3 Test circuit

Figure 15. Switching times test circuit for resistive load

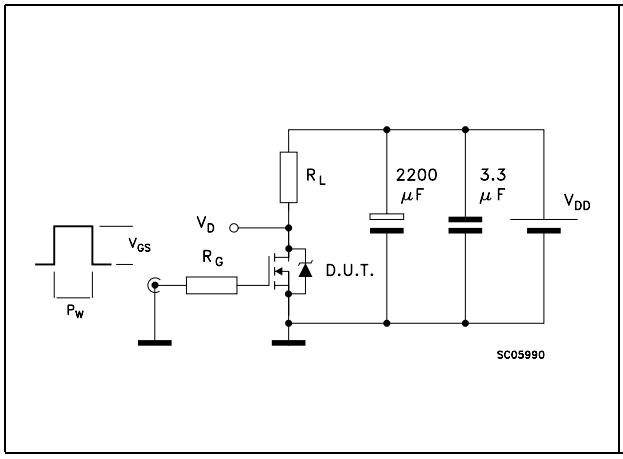

Figure 16. Gate charge test circuit

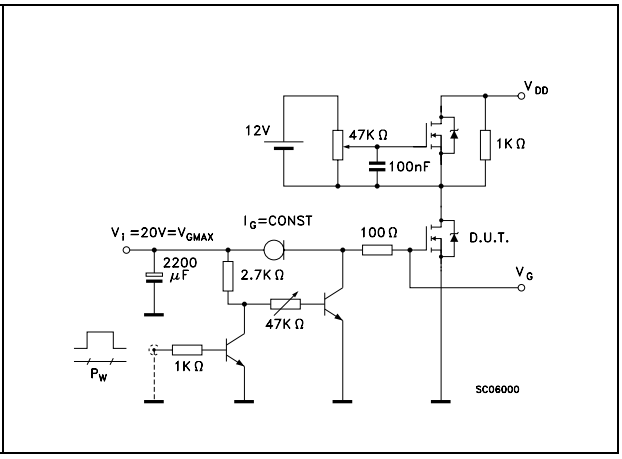

Figure 17. Test circuit for inductive load switching and diode recovery times

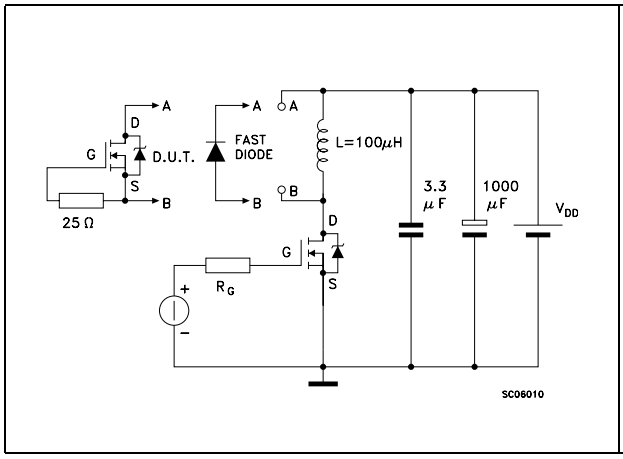

Figure 18. Unclamped Inductive load test circuit

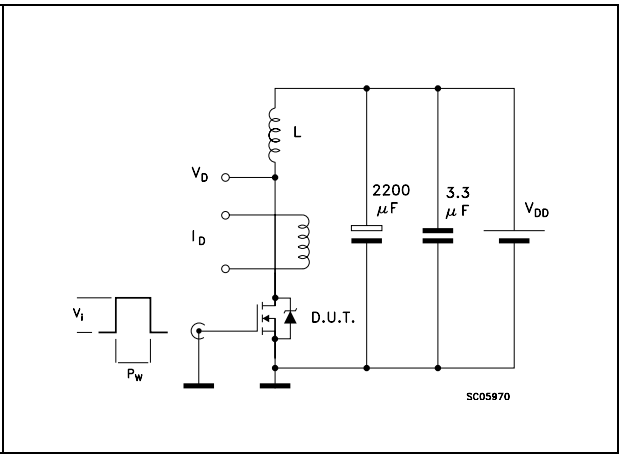

Figure 19. Unclamped inductive waveform

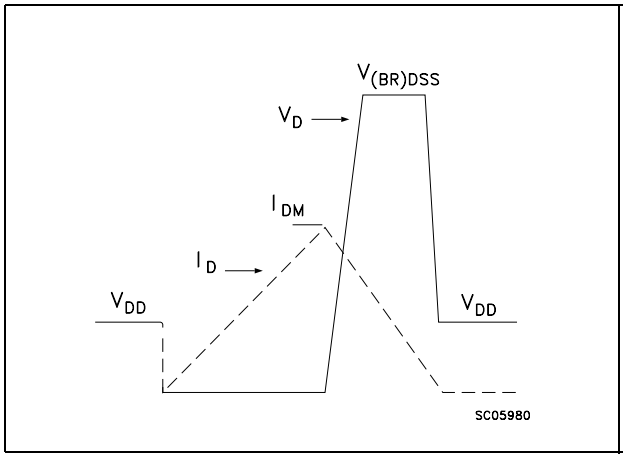

Figure 20. Switching time waveform

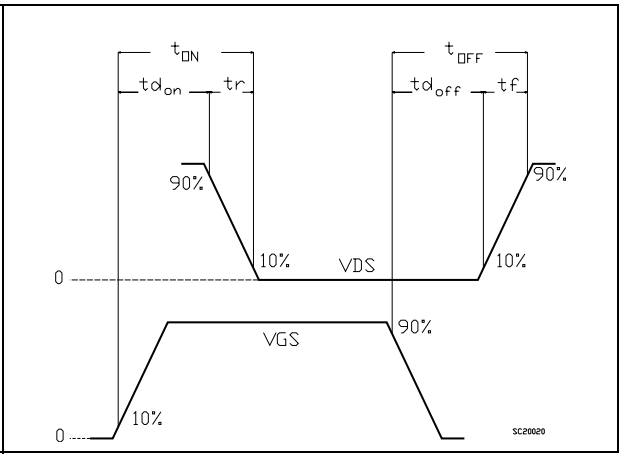

4 Package mechanical data

In order to meet environmental requirements, ST offers these devices in ECOPACK® packages. These packages have a Lead-free second level interconnect . The category of second level interconnect is marked on the package and on the inner box label, in compliance with JEDEC Standard JESD97. The maximum ratings related to soldering conditions are also marked on the inner box label. ECOPACK is an ST trademark. ECOPACK specifications are available at: www.st.com

D^2PAK MECHANICAL DATA

DIM.	mm.			inch		
	MIN.	TYP	MAX.	MIN.	TYP.	MAX.
A	4.4		4.6	0.173		0.181
A1	2.49		2.69	0.098		0.106
A2	0.03		0.23	0.001		0.009
B	0.7		0.93	0.027		0.036
B2	1.14		1.7	0.044		0.067
C	0.45		0.6	0.017		0.023
C2	1.23		1.36	0.048		0.053
D	8.95		9.35	0.352		0.368
D1		8			0.315	
E	10		10.4	0.393		
E1		8.5			0.334	
G	4.88		5.28	0.192		0.208
L	15		15.85	0.590		0.625
L2	1.27		1.4	0.050		0.055
L3	1.4		1.75	0.055		0.068
M	2.4		3.2	0.094		0.126
R		0.4			0.015	
V2	0º		4º			

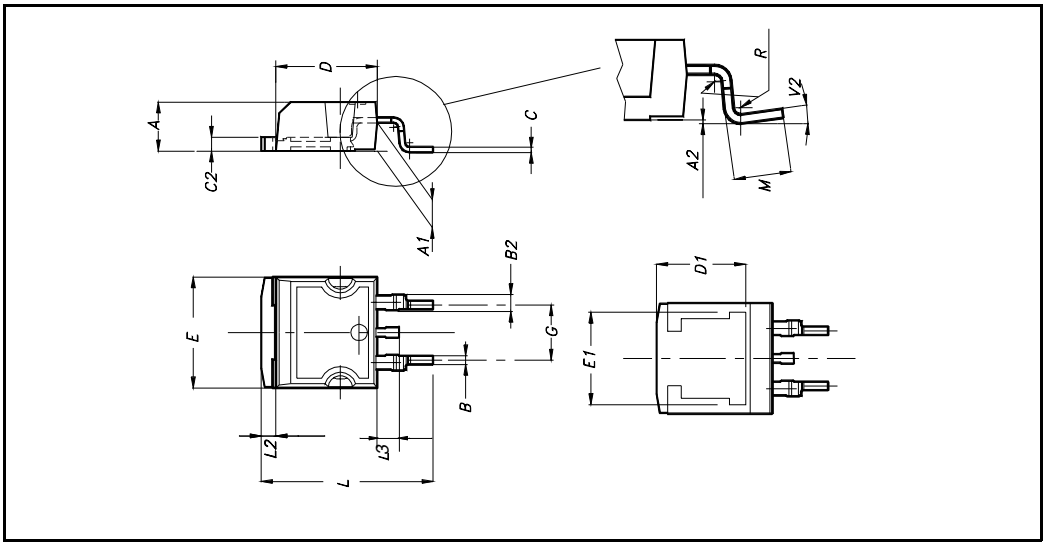

TO-220 MECHANICAL DATA

DIM.	mm.			inch		
	MIN.	TYP	MAX.	MIN.	TYP.	MAX.
A	4.40		4.60	0.173		0.181
b	0.61		0.88	0.024		0.034
b1	1.15		1.70	0.045		0.066
c	0.49		0.70	0.019		0.027
D	15.25		15.75	0.60		0.620
E	10		10.40	0.393		0.409
e	2.40		2.70	0.094		0.106
e1	4.95		5.15	0.194		0.202
F	1.23		1.32	0.048		0.052
H1	6.20		6.60	0.244		0.256
J1	2.40		2.72	0.094		0.107
L	13		14	0.511		0.551
L1	3.50		3.93	0.137		0.154
L20		16.40			0.645	
L30		28.90			1.137	
øP	3.75		3.85	0.147		0.151
Q	2.65		2.95	0.104		0.116

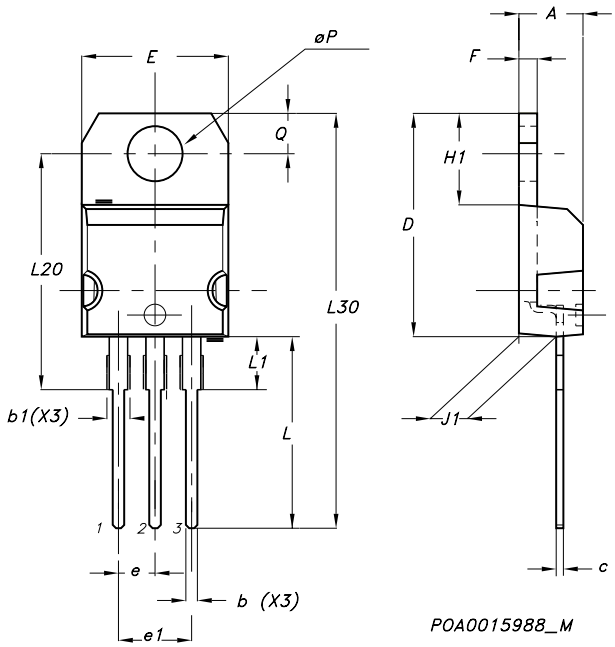

TO-220FP MECHANICAL DATA

DIM.	mm.			inch		
	MIN.	TYP	MAX.	MIN.	TYP.	MAX.
A	4.4		4.6	0.173		0.181
B	2.5		2.7	0.098		0.106
D	2.5		2.75	0.098		0.108
E	0.45		0.7	0.017		0.027
F	0.75		1	0.030		0.039
F1	1.15		1.7	0.045		0.067
F2	1.15		1.7	0.045		0.067
G	4.95		5.2	0.195		0.204
G1	2.4		2.7	0.094		0.106
H	10		10.4	0.393		0.409
L2		16			0.630	
L3	28.6		30.6	1.126		1.204
L4	9.8		10.6	.0385		0.417
L5	2.9		3.6	0.114		0.141
L6	15.9		16.4	0.626		0.645
L7	9		9.3	0.354		0.366
Ø	3		3.2	0.118		0.126

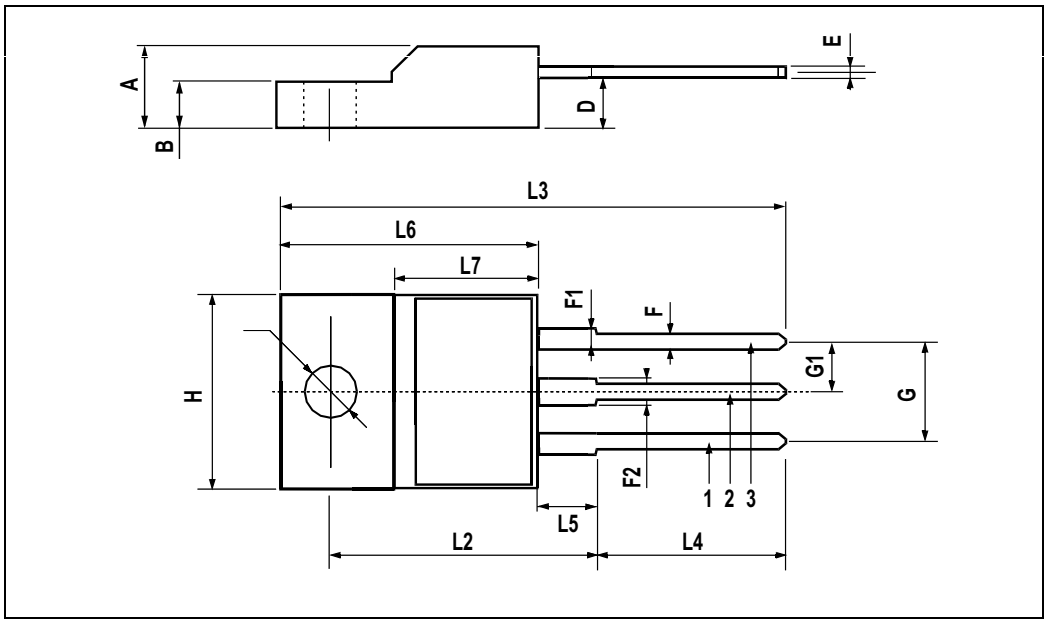

5 Packing mechanical data

D²PAK FOOTPRINT

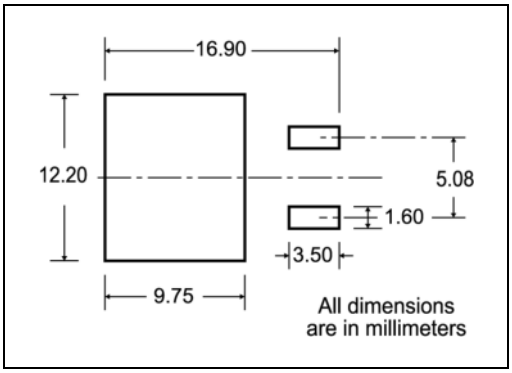

TAPE AND REEL SHIPMENT

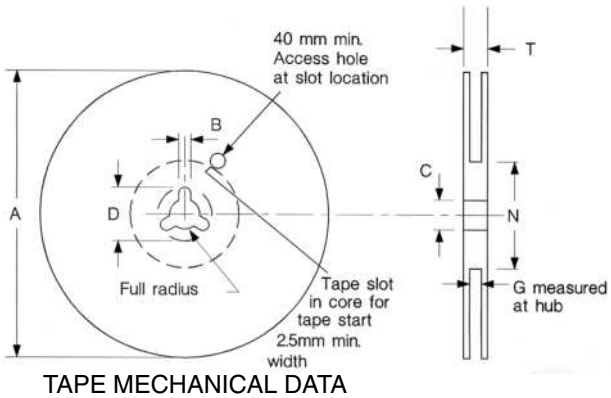

REEL MECHANICAL DATA

DIM.	mm		inch	
	MIN.	MAX.	MIN.	MAX.
A		330		12.992
B	1.5		0.059	
C	12.8	13.2	0.504	0.520
D	20.2		0795	
G	24.4	26.4	0.960	1.039
N	100		3.937	
T		30.4		1.197

BASE QTY	BULK QTY
1000	1000

TAPE MECHANICAL DATA

DIM.	mm		inch	
	MIN.	MAX.	MIN.	MAX.
A0	10.5	10.7	0.413	0.421
B0	15.7	15.9	0.618	0.626
D	1.5	1.6	0.059	0.063
D1	1.59	1.61	0.062	0.063
E	1.65	1.85	0.065	0.073
F	11.4	11.6	0.449	0.456
K0	4.8	5.0	0.189	0.197
P0	3.9	4.1	0.153	0.161
P1	11.9	12.1	0.468	0.476
P2	1.9	2.1	0.075	0.082
R	50		1.574	
T	0.25	0.35	0.0098	0.0137
W	23.7	24.3	0.933	0.956

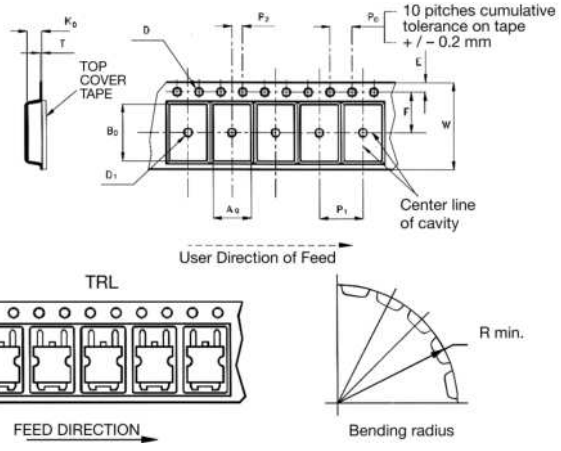

* on sales type

6 Revision history

Table 6. Revision history

Date	Revision	Changes
21-Jun-2004	2	Complete version
26-Jun-2006	3	New template, no content change

Please Read Carefully:

Information in this document is provided solely in connection with ST products. STMicroelectronics NV and its subsidiaries (“ST”) reserve the right to make changes, corrections, modifications or improvements, to this document, and the products and services described herein at any time, without notice.

All ST products are sold pursuant to ST’s terms and conditions of sale.

Purchasers are solely responsible for the choice, selection and use of the ST products and services described herein, and ST assumes no liability whatsoever relating to the choice, selection or use of the ST products and services described herein.

No license, express or implied, by estoppel or otherwise, to any intellectual property rights is granted under this document. If any part of this document refers to any third party products or services it shall not be deemed a license grant by ST for the use of such third party products or services, or any intellectual property contained therein or considered as a warranty covering the use in any manner whatsoever of such third party products or services or any intellectual property contained therein.

UNLESS OTHERWISE SET FORTH IN ST’S TERMS AND CONDITIONS OF SALE ST DISCLAIMS ANY EXPRESS OR IMPLIED WARRANTY WITH RESPECT TO THE USE AND/OR SALE OF ST PRODUCTS INCLUDING WITHOUT LIMITATION IMPLIED WARRANTIES OF MERCHANTABILITY, FITNESS FOR A PARTICULAR PURPOSE (AND THEIR EQUIVALENTS UNDER THE LAWS OF ANY JURISDICTION), OR INFRINGEMENT OF ANY PATENT, COPYRIGHT OR OTHER INTELLECTUAL PROPERTY RIGHT.

UNLESS EXPRESSLY APPROVED IN WRITING BY AN AUTHORIZE REPRESENTATIVE OF ST, ST PRODUCTS ARE NOT DESIGNED, AUTHORIZED OR WARRANTED FOR USE IN MILITARY, AIR CRAFT, SPACE, LIFE SAVING, OR LIFE SUSTAINING APPLICATIONS, NOR IN PRODUCTS OR SYSTEMS, WHERE FAILURE OR MALFUNCTION MAY RESULT IN PERSONAL INJURY, DEATH, OR SEVERE PROPERTY OR ENVIRONMENTAL DAMAGE.

Resale of ST products with provisions different from the statements and/or technical features set forth in this document shall immediately void any warranty granted by ST for the ST product or service described herein and shall not create or extend in any manner whatsoever, any liability of ST.

ST and the ST logo are trademarks or registered trademarks of ST in various countries.

Information in this document supersedes and replaces all information previously supplied.

The ST logo is a registered trademark of STMicroelectronics. All other names are the property of their respective owners.

© 2006 STMicroelectronics - All rights reserved

STMicroelectronics group of companies

Australia - Belgium - Brazil - Canada - China - Czech Republic - Finland - France - Germany - Hong Kong - India - Israel - Italy - Japan - Malaysia - Malta - Morocco - Singapore - Spain - Sweden - Switzerland - United Kingdom - United States of America

www.st.com