# CLT3-4B

## Current limited over-voltage protected quad digital termination

## Features

- 4 channel topology
- Wide range input dc Voltage:
  - $V_I$= - 0.3 to 30 V with $R_I$ = 0
  - $V_I$ = - 30 to 30 V with $R_I$ = 1.8 kΩ
  - Low side configuration with common ground
- Current limiter:
  - $I_{GEN}$ = 3 mA
  - Input current limiter activation voltage < 5 V
  - Temperature compensated operation
- Opto-coupler drive:
  - No coupler activation below 1.5 mA input current
- Input protection ($R_I$ = 1.2 kΩ):
  - IEC 61000-4-2 electrostatic discharge ESD, Class 3
    - In contact, ± 6 kV; in air, ± 8 kV
    - Level B: temporary disruption; no change of opto-coupler state
  - IEC 61000-4-5 voltage surge, Class 3
    - ± 1000 V with 42 Ω serial resistor in differential mode
    - Level B: temporary disruption
  - IEC 61000-4-4 transient burst immunity
    - ± 4 kV peak voltage; 5 kHz repetitive rate
    - Level A: fully functional
- Operating ambient temperature: - 25 to 85° C

### Benefits

- Reduced overall dissipation
- Compact with high integration
- Enables input to meet type 1 and 3 characteristic of IEC 61131-2 standard
- Compatible operation with 2 and 3 wires proximity sensor according EN60947-5-2 standard
- Insensitive to the on state sensor impedance
- Surface mount package for highly automated assembly
- Enhanced functional reliability

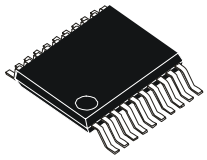

**TSSOP20**

## Applications

- Industrial automation
- Programmable logic controller
- Communication field bus nodes
- Peripheral input / output modules
- Machine tool interface

## Description

The CLT3-4 is a quadruple input digital termination device designed for 24 V dc automation applications. It provides the front-end circuitry of a digital input module (I/O) in industrial automation, and drives an isolating opto-coupler.

**Figure 1. Pin configuration**

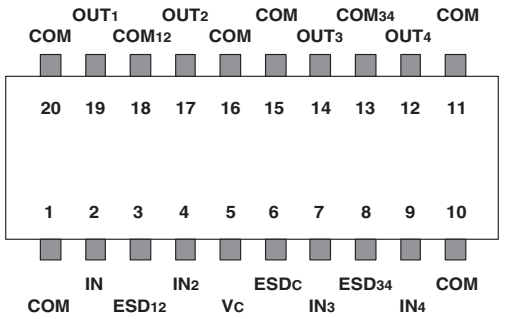


The pins ESD, $COM_{IJ}$, COM (pins # 1, 3, 6, 8, 10, 11, 13, 15, 16, 18, 20) must be connected together externally. This common pad COM is enlarged to reduce the thermal resistance and improve the device cooling. The COM and IN pins are designed to minimize the EMI effects on the circuit.

# 1 Characteristics

**Figure 2. Functional block diagram**

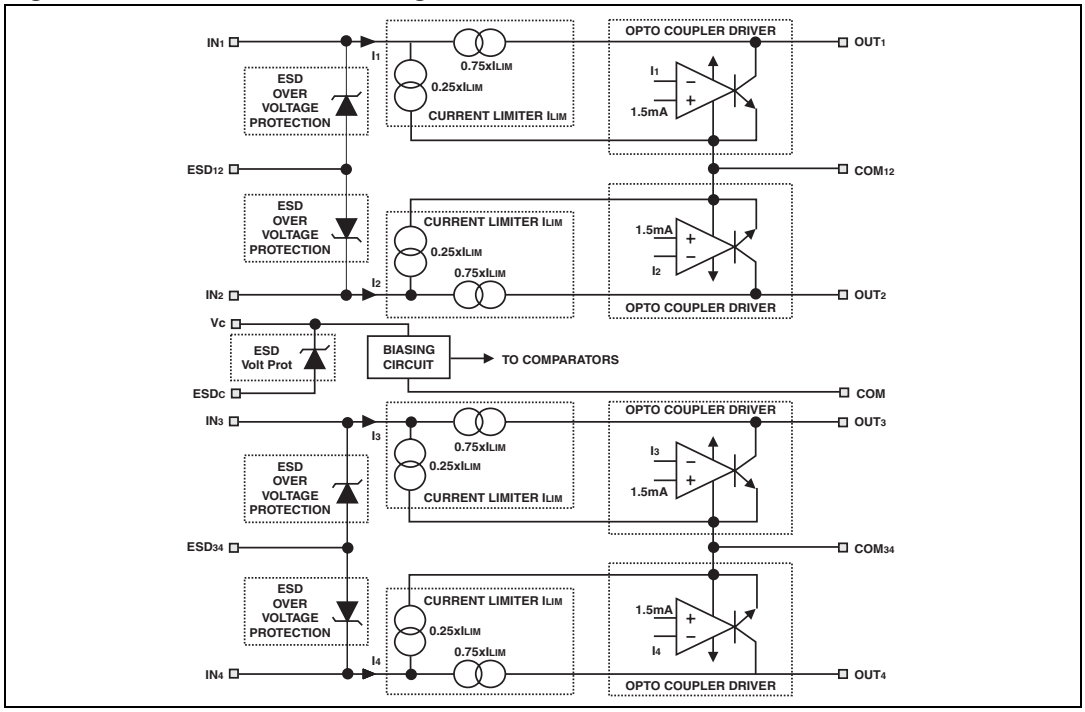


**Table 1. Absolute ratings** (limiting values)

| Symbol | | Parameter | Value | Unit |
|---|---|---|---|---|
| $V_{CC}$ | $V_C$ | Supply steady state voltage, $R_C$ = 0 kΩ | - 0.3 to 30 | V |
| | | Supply steady state voltage, $R_C$ = 4.7 kΩ | - 30 to 30 | V |
| $V_I$ (1) | IN | Input steady state voltage, $R_I$ = 0 kΩ | - 0.3 to 30 | V |
| | | Input steady state voltage, $R_I$ = 1.2 kΩ | - 0.3 to 32 | V |
| | | Input repetitive pulse voltage, $R_I$ = 1.2 kΩ | - 0.3 to 35 | V |
| | | Input repetitive pulse voltage, $R_I$ = 1.8 kΩ, $R_C$ = 4.7 kΩ (2) | - 30 to 30 | V |
| $I_{IN}$ | IN | Input maximum forward current, $R_I$ = 1.2 kΩ, $R_C$ = 4.7 kΩ | 5 | mA |
| | | Input maximum reverse current, $R_I$ = 1.8 kΩ, $R_C$ = 4.7 kΩ (2) | 20 | mA |
| $V_{OM}$ | OUT | Maximum output steady state voltage | 2.5 | V |
| $I_{OM}$ | OUT | Output current | - 4 to 4 | mA |
| $T_{AMB}$ | All | Operating ambient temperature | - 25 to 85 | ° C |
| $T_J$ | | Operating and storage junction temperature | - 25 to 150 | ° C |

1. $V_I = V_{IN} + R_I \times I_{IN}$; $V_{IN}$ = voltage at the input pin itself
2. According to test diagram and design recommendations described in *Section 2.2*.

**Table 2. Thermal resistance**

| Symbol | Parameter | Value | Unit |
|---|---|---|---|
| $R_{th(j-a)}$ | TSSOP20 thermal resistance junction to ambient<br>Board copper surface = 2 $cm_2$, copper thickness = 35 µm | 90 | °C/W |

**Table 3. Electrical characteristics ($T_J$ = 25 °C, $V_{CC}$ = 24 V and COM pin voltage referred unless otherwise specified)**

| Symbol | Pin | Name | Conditions | Min. | Typ | Max. | Unit |
|---|---|---|---|---|---|---|---|
| Current limitation | | | | | | | |
| $I_{LIM}$ | IN | Input limiting current | $V_{OUT}$ = 0.9 to 2.0 V<br>$V_{IN}$ = 5 to 27 V<br>$T_{AMB}$ = - 25 to 85° C | 2.1 | 3 | 3.7 | mA |
| $V_{LOW}$ | IN | Maximum off state voltage | $I_{IN}$ = 100 µA | | 1.5 | | V |
| $V_{TH}$ | IN | Activation threshold | $I_{IN}$ = 2.1 mA | | 3.4 | 5 | V |
| Input and Supply Protection | | | | | | | |
| $V_{CL}$ | IN | Clamping voltage | $I_{IN}$ = 7 mA; $t_P$ = 1 ms | 31 | 38 | - | V |
| Opto-coupler driver operation | | | | | | | |
| $I_{OFF}$ | OUT | Off state output current | $V_I$ = 5 V, (1) | - | 10 | 40 | µA |
| | | | $I_{IN}$ = 1.5 mA, (2) | - | 10 | 40 | µA |
| $V_{OFF}$ | OUT | Off state output voltage | $I_{IN}$ = 1.5 mA | | 0.15 | 0.5 | V |
| $I_{ON}$ | OUT | On state output current | $V_{IN}$ = 5 V | 1.5 | 2 | - | mA |
| | | | $V_{IN}$ = 4.2 V, $V_C$ = 10 V | 1.5 | 2 | - | mA |
| Supply and biasing circuit | | | | | | | |
| $V_C$ | $V_C$ | Supply voltage | $T_{AMB}$ = - 25 to 85° C | 10 | | | V |
| $I_C$ | $V_C$ | Supply current | $V_{IN}$ = $V_C$ = 30 V | | 550 | 800 | µA |

1. According to *Figure 9: Robust application diagram on page 8* with use of a $R_I$ = 1.8 kΩ resistor, and an opto-coupler ($R_{LED}$ (0 V) = 15 kΩ)
2. According to *Figure 9: Robust application diagram on page 8* with use of a $R_I$ = 0 kΩ resistor, and an opto-coupler ($R_{LED}$ (0 V) = 15 kΩ)

**Table 4. Switching electrical characteristics ($T_J$ = 25 °C, $V_{CC}$ = 24V and COM pin voltage referred unless otherwise specified)**

| Symbol | Pin | Name | Conditions | Min. | Typ | Max. | Unit |
|---|---|---|---|---|---|---|---|
| $F_{MAX}$ | IN-OUT | Input to output running frequency | | | 5 | | kHz |
| $t_{PLH}$ | IN-OUT | Input activation propagation time | $C_{OUT}$ = 22 nF | | 6 | | µs |
| $t_{PHL}$ | IN-OUT | Input de-activation propagation time | $C_{OUT}$ = 22 nF | | 10 | | µs |

**Table 5. CLT3 System electromagnetic compatibility ratings, $R_I$ = 1.8 kΩ, $R_C$ = 4.7 kΩ (unless otherwise specified)**

| Symbol | Node | Parameter name and conditions | Value | Unit |
|---|---|---|---|---|
| $V_{PP}$ | IN | ESD protection, IEC 61000-4-2, per input, in air | ± 8 | kV |
| | | ESD protection, IEC 61000-4-2, per input, in contact | ± 6 | kV |
| | | ESD protection, IEC 61000-4-2, per input, in air, $R_I$ = 0 Ω | ± 3 | kV |
| | | ESD protection, IEC 61000-4-2, per input, in contact, $R_I$ = 0 Ω | ± 3 | kV |
| $V_{PPB}$ | $V_I$ | Total Peak Pulse Voltage Burst, IEC 61000-4-4 $C_{IN}$ = 100 pF, $C_{OUT}$ = 22 nF, F = 5 kHz (1) | ± 4 | kV |
| $V_{PP}$ | $V_I$ | Peak Pulse Voltage Surge, IEC 61000-4-5, R = 42 Ω (2) | ± 1 | kV |
| $V_{PP}$ | $V_{CC}$ | Peak Pulse Voltage Surge, IEC 61000-4-5, R = 2 Ω (2) | ± 1 | kV |

1. Refer to Application note AN2527 for test conditions.
2. See test circuit in *Figure 12*.

**Figure 3. Typical junction to ambient thermal resistance versus copper surface under common pad (FR4 epoxy, copper thickness is 35 µm)**

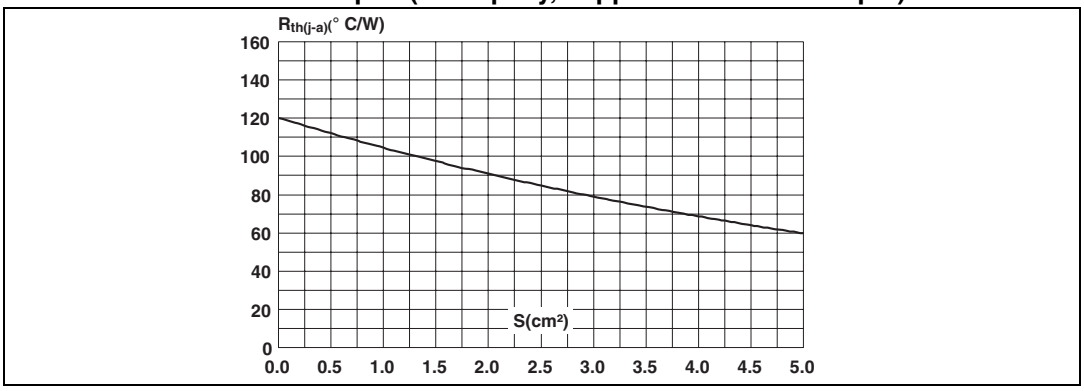


## 1.1 Functional description

The CLT3-4 is a quadruple input digital termination device designed for 24 V DC automation applications. It provides the front-end circuitry of a digital input module (I/O) in industrial automation, and drives an isolating opto-coupler.

Available in a four channels configuration, it offers a high-density termination by minimizing the external components count. It is housed in a TSSOP20 surface mount package to reduce the printed board size.

Made of an input voltage protection, a serial current limiting circuit and an opto-coupler driver, each channel circuit terminates the connection between the logic input and the associated high side sensor or switch.

The CLT3-4 is a 3 mA quad channel device compatible the type 1 and 3 characteristics of the IEC 61131-2 standard.

Each input voltage clamping block protects the module input against electromagnetic interferences such as those described in the IEC 61131-2 standard and IEC 61000-4-2 (ESD), 4-4 (transient burst), 4-5 (voltage surge) standards. The supply input is also designed with such a protection structure.

The current limiting circuit connected between the input and the output pins is compensated all over the temperature range. Thanks to its low tolerance, the current limitation allows reducing drastically the dissipation of the input compared to a resistive input: the overall module requires less cooling capability and becomes smaller.

The output block of each termination channel controls the operation of an opto-coupler that is enabled by a Light Emitting Diode.

When the input current is less than 1.5 mA, this output circuit derivates the input current to maintain the opto-coupler off.

The original structure of the CLT limiter allows its activation threshold to be low and insensitive to the output voltage up to a maximum value of 2.0 V.

When the CLT input voltage $V_{IN}$ is higher than 5 V, or the module input voltage Vi higher than 11 V and a series resistor $R_I$ = 1.2 kΩ, the output current that is a share of the input current (3/4) is higher than 1.5 mA. The whole termination channel including the opto-coupler is on.

Depending on the input type operation that is described by the IEC 61131-2 standard, the input resistance $R_I$ can be adjusted because of the different on-state threshold $V_{ON\ MIN}$.

This document describes operation and characteristics for type 3 operation with $V_{ON\ MIN}$ = 11 V and $R_I$ = 1.2 kΩ.
In type 1 operation the on state threshold $V_{ON\ MIN}$ is 12.34 V instead, and the input resistor $R_I$ is set 2.2 kΩ.

## 1.2 Input characteristics of CLT3-4

**Figure 4. Typical input characteristics of each CLT3-4 channel**

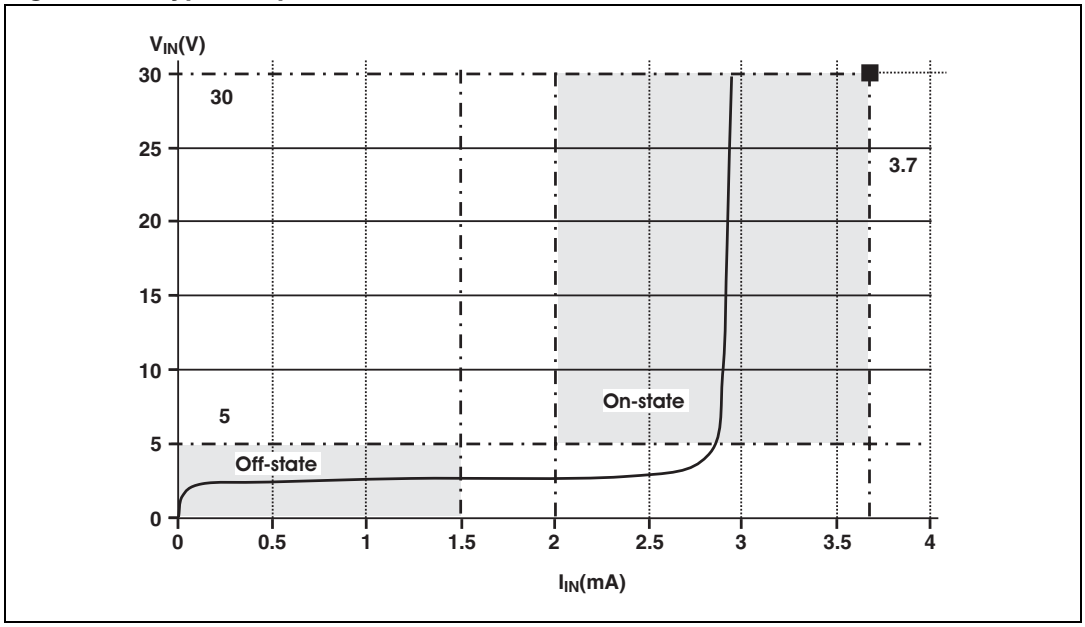

**Figure 5. Typical current limiter variation versus junction temperature 0.9 V < $V_{OUT}$ < 2 V**

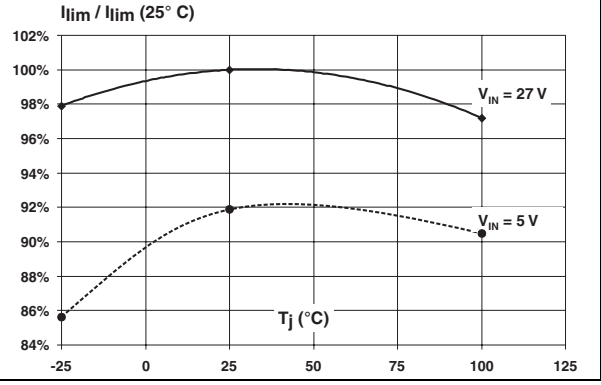


**Figure 6. Typical limiter threshold voltage variation versus junction temperature for $I_{IN}$ = 2.1 mA**

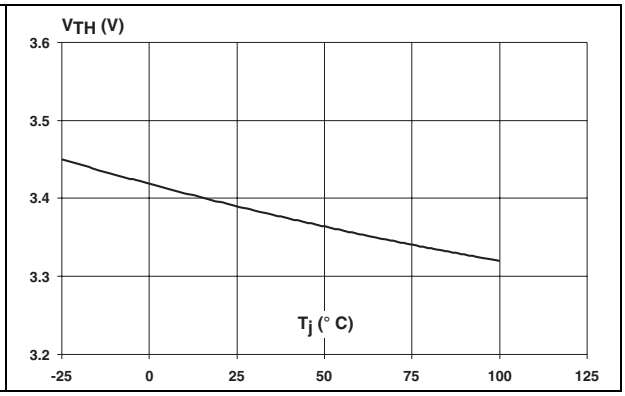


## 1.3 CLT3-4 Input / output transfer characteristics (with respect to common pin COM)

**Figure 7. Current tranfer characteristic**

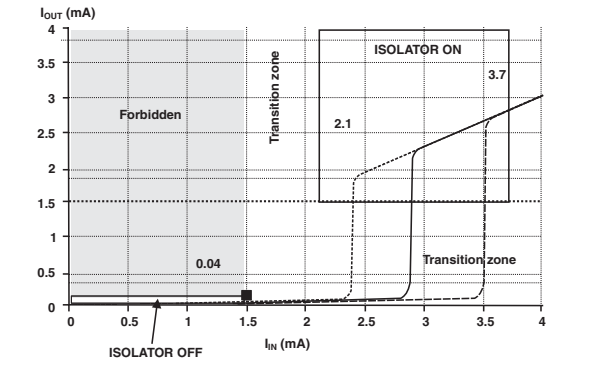


**Figure 8. Transconductance characteristic**

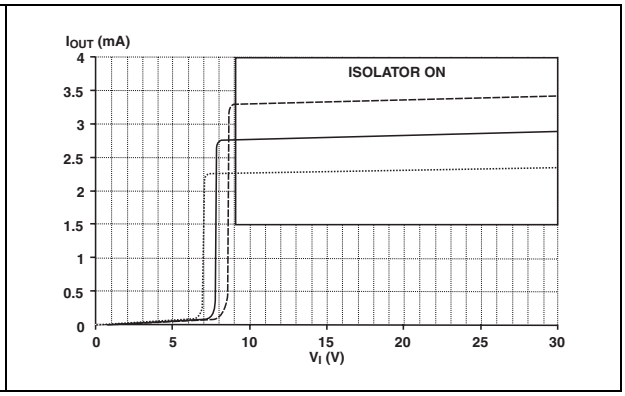

# 2 Application information

## 2.1 Application description

The CLT device is used between the input module and the opto-coupler of an I/O module. To secure the coupler off state and the non-conduction of its diode, the maximum CLT output current is 40 µA with R opto = 15 kΩ. When the CLT input voltage $V_{IN}$ is higher than 5 V, a minimum CLT output current of 1.5 mA will secure the opto-coupler on state.

The CLT limiter is insensitive to the output voltage up to 2.0V. Therefore, its output is able to drive any state of the art opto-coupler. Some additional device can be added in series with the opto-coupler if the output voltage remains within its functional limits.

A stand-alone sensor is normally connected on the CLT input. For a good off state control, its quiescent current has to be less than 1.5 mA (EN60947-5-2 standard compatible) keeping then the opto-coupler off thanks to the CLT device ($I_{OUT}$ < 40 µA). And its maximum ON state voltage $V_{S-ON}$ will be lower than 8 V (EN60947-5-2 standard compatible) corresponding to the difference between the minimum supply voltage ($V_{CC\ MIN}$ = 19.2 V) and the maximum current limitation activation voltage:
$V_{CC\ MIN} = V_{S-ON} + V_I$
$V_I = V_{IN} + R_I \times I_{IN\ MAX}$
($V_I$ = 11 V when $V_{IN}$ = 5 V, $R_I$ = 1.2 kΩ, $I_{IN}$ < 3.7 mA).

## 2.2 Input reverse polarity robustness

Each input of the CLT device may be biased to a reverse polarity. This case corresponds to a connection mistake or a reverse biasing that is generated by the demagnetization of a monitored inductive solenoid.

The involved input can withstand the reverse current up to 20 mA (in the configuration shown in *Figure 10*) through its input protection diode while its opto-coupler remains OFF.

Such a case is not critical for the CLT3-4 itself, as it represents less than 15 mW per disturbed input. But the input resistors should be designed with care regardless of their thermal characteristics (refer to Application note AN2527).

When the reverse polarity operation is required in types 3 input mode, it is recommended to increase the input resistance $R_I$ to 1.8 kΩ in order to reduce its dissipation and keep the input current below its maximum allowed level (20 mA). The surge and transient immunity robustness of the CLT3 is then also increased.

A 1.8 kΩ value allows the reverse input current to be reduced to 16.2 mA and the resistor dissipation to be reduced to 0.47 W, for 30 V $V_{CC}$ and a - 30 V $V_I$ voltages.

The CLT3 normal operation in type 3 is fully compatible with this recommended resistance since its internal state threshold is monitored at $V_{IN}$ = 4.2 V and $V_C$ = 10V - corresponding to $V_I$ = 11 V and $V_{CC}$ = 19 V.

In type 1 input operation where $R_I$ = 2.2 kΩ the dissipation of this resistor is less than 0.39 W.

The other inputs remain operational, as long as the power supply is working properly ($V_{CC}$ >19 V). Refer to Application note AN 2527 for representative application design case.

The CLT3-4 and the 24 V bus power supply have the same ground COM = GND. The reverse polarity of the power supply will shutdown the device. And the power supply resistor $R_C$ will limit the default current protecting the power supply pin $V_C$. Its dissipation will be less than 0.2 W.

Then, the whole module supply voltage rating is extended to from 0 to 30 V to -30 to +30 V.

## 2.3 EMC considerations

*Figure 9* gives a typical application diagram where output capacitors are used to increase CLT device immunity against fast transient bursts.

*Figure 11* gives the printed circuit board layout associated with this schematic.

Refer to AN2527 for EMC considerations.

**Figure 9. Robust application diagram**

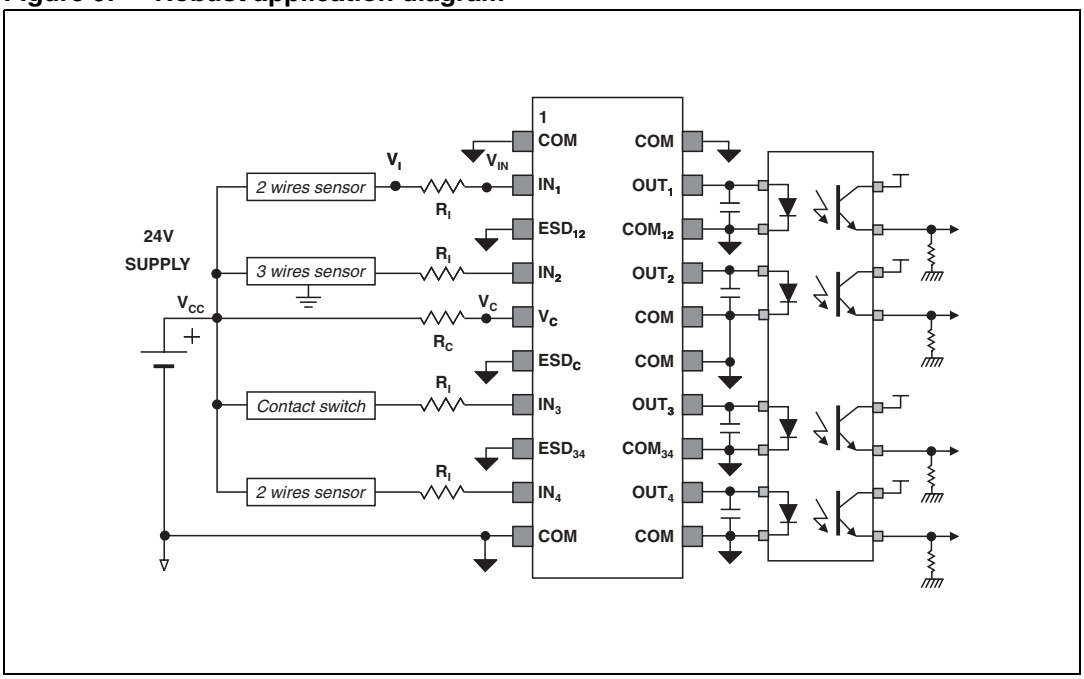

**Figure 10. Current sharing in the CLT device when $IN_4$ is biased at - 30 V and the others at + 30 V, $R_I$ = 1.8 kΩ**

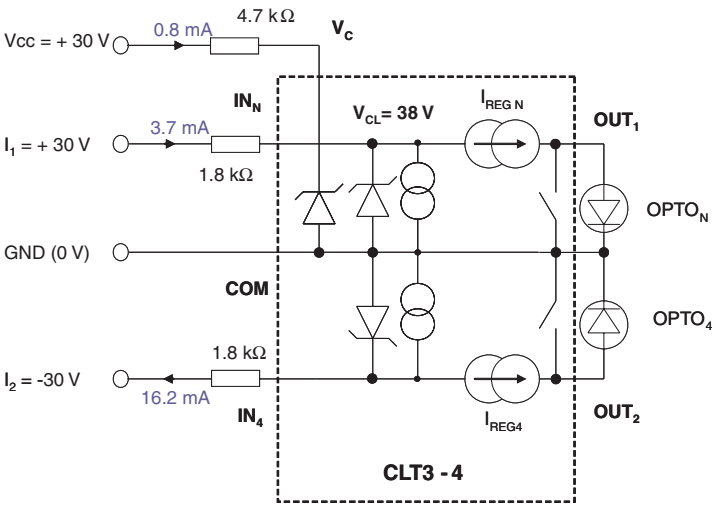


**Figure 11. TSSOP20 printed circuit board example**

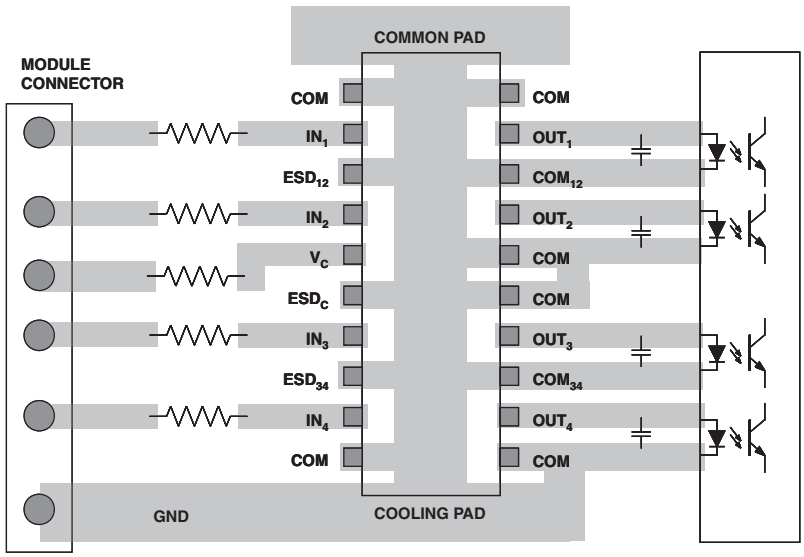


The input and supply pins are designed to withstand electromagnetic interferences. As shown on the device block diagram, each channel input is protected by a clamping diode that is connected to the common pin COM. Combined with a serial input resistance $R_I$ = 1.2 kΩ, this clamping diode implements an effective protection against transient voltage burst (± 4 kV, IEC 61000-4-4) and voltage surge (± 1 kV, IEC 61000-4-5).

Depending on the input type operation the input resistance $R_I$ can be adjusted because of the different on-state threshold $V_{ON\ MIN}$. So the surge voltage is also increased from the minimum level of the type 3 to the type as shown in *Table 6*.

**Table 6. Setting the input resistor $R_I$ according to the input type operation**

| Type | $V_{ON\ MIN}$ (V) | $R_I$ (kΩ) | $V_{PP}$ surge (kV) |
|---|---|---|---|
| 1 | 15 | 2.2 | 2 |
| 3 | 11 | 1.2 to 1.8 | 1 |

This combination allows the surge voltage to be applied from each input to other inputs, the ground and the supply contacts in differential or common modes (see *Figure 12*).

Thanks to its high resistance $R_C$ = 4.7 kΩ, the supply pin $V_C$ withstands IEC 61000-4-5 with ±1000 V surge voltage (see *Figure 12*).

Finally, an external output capacitor may be placed in parallel with the opto-coupler diode to filter the transient disturbances injected in the inputs of the module and secure the immunity of the opto-coupler itself.

**Figure 12. Input pin IN and supply pin $V_C$ voltage surge test circuit**

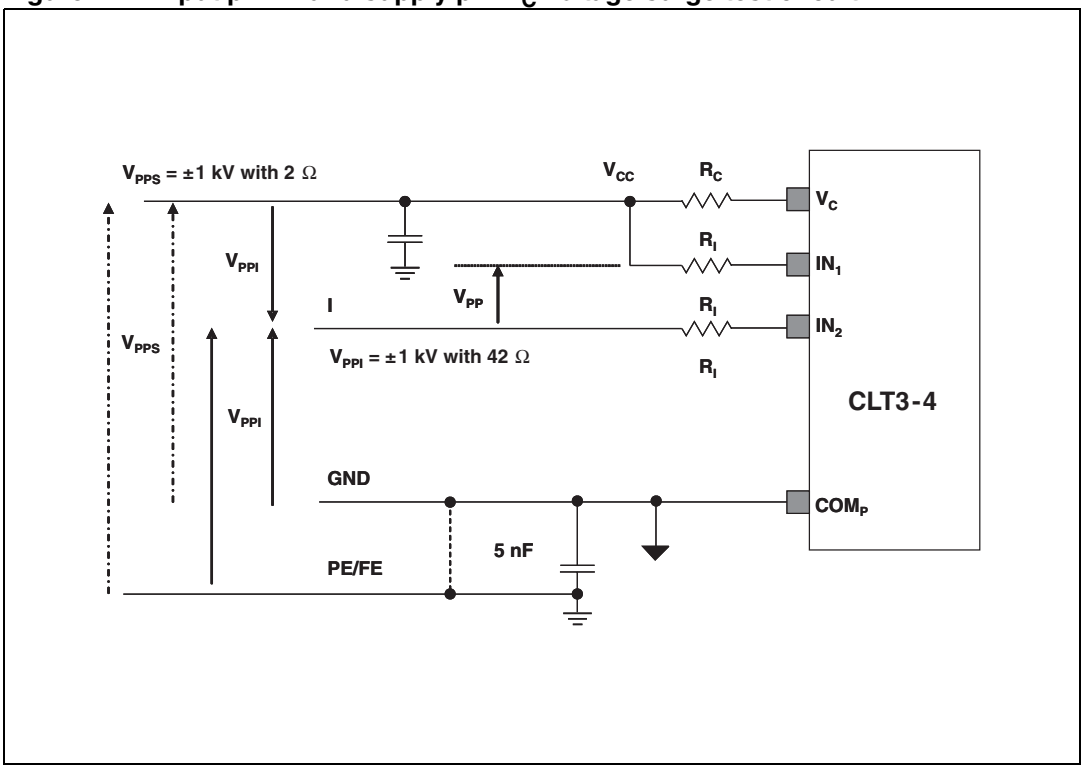

# 3 Package information

- Epoxy meets UL94,V0

In order to meet environmental requirements, ST offers these devices in ECOPACK® packages. These packages have a lead-free second level interconnect. The category of second level interconnect is marked on the package and on the inner box label, in compliance with JEDEC Standard JESD97. The maximum ratings related to soldering conditions are also marked on the inner box label. ECOPACK is an ST trademark. ECOPACK specifications are available at: www.st.com.

**Table 7. TSSOP20 dimensions**

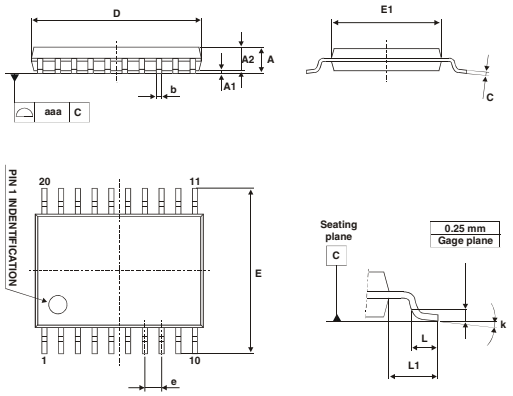


| Ref. | Dimensions | | | | | |
|---|---|---|---|---|---|---|
| | Millimeters | | | Inches | | |
| | Min. | Typ. | Max. | Min. | Typ. | Max. |
| A | | | 1.2 | | | 0.047 |
| A1 | 0.05 | | 0.15 | 0.002 | | 0.006 |
| A2 | 0.8 | 1.0 | 1.05 | 0.031 | 0.039 | 0.041 |
| b | 0.19 | | 0.3 | 0.007 | | 0.012 |
| c | 0.09 | | 0.2 | 0.003 | | 0.007 |
| D | 6.4 | 6.5 | 6.6 | 0.252 | 0.256 | 0.259 |
| E | 6.2 | 6.4 | 6.6 | 0.244 | 0.252 | 0.256 |
| E1 | 4.3 | 4.4 | 4.5 | 0.169 | 0.173 | 0.177 |
| e | | 0.65 | | | 0.026 | |
| L | 0.45 | 0.6 | 0.75 | 0.017 | 0.023 | 0.029 |
| L1 | | 1.0 | | | 0.039 | |
| k | 0° | | 8° | 0° | | 8° |
| aaa | | | 0.1 | | | 0.004 |

**Figure 13. TSSOP20 footprint (dimensions in mm)**

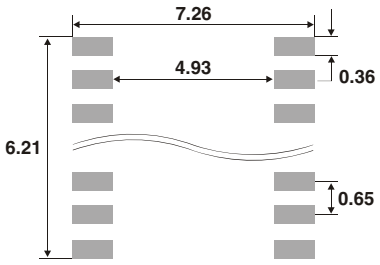

# 4 Ordering information

**Table 8. Ordering information**

| Order code | Marking | Package | Weight | Base qty | Delivery mode |
|---|---|---|---|---|---|
| CLT3-4BT6 | CLT3-4B | TSSOP20 | 0.074 g | 74 | Tube |
| CLT3-4BT6-TR | CLT3-4B | TSSOP20 | 0.074 g | 2500 | Tape and reel |

# 5 Revision history

**Table 9. Document revision history**

| Date | Revision | Changes |
|---|---|---|
| August-2002 | 4A | Previous release. |
| 27-Nov-2007 | 5 | Reformatted and restructured to current standard. Updated *Figure 2*, *Figure 9*, *Figure 10*, *Figure 11*, and deleted Figure 12. Added paragraphs to *Functional description* and *Application information*. Extended application field with a new diagram (*Figure 11*) for reverse polarity test. Updated *Package information*. |

**Please Read Carefully:**

Information in this document is provided solely in connection with ST products. STMicroelectronics NV and its subsidiaries (“ST”) reserve the right to make changes, corrections, modifications or improvements, to this document, and the products and services described herein at any time, without notice.

All ST products are sold pursuant to ST’s terms and conditions of sale.

Purchasers are solely responsible for the choice, selection and use of the ST products and services described herein, and ST assumes no liability whatsoever relating to the choice, selection or use of the ST products and services described herein.

No license, express or implied, by estoppel or otherwise, to any intellectual property rights is granted under this document. If any part of this document refers to any third party products or services it shall not be deemed a license grant by ST for the use of such third party products or services, or any intellectual property contained therein or considered as a warranty covering the use in any manner whatsoever of such third party products or services or any intellectual property contained therein.

**UNLESS OTHERWISE SET FORTH IN ST’S TERMS AND CONDITIONS OF SALE ST DISCLAIMS ANY EXPRESS OR IMPLIED WARRANTY WITH RESPECT TO THE USE AND/OR SALE OF ST PRODUCTS INCLUDING WITHOUT LIMITATION IMPLIED WARRANTIES OF MERCHANTABILITY, FITNESS FOR A PARTICULAR PURPOSE (AND THEIR EQUIVALENTS UNDER THE LAWS OF ANY JURISDICTION), OR INFRINGEMENT OF ANY PATENT, COPYRIGHT OR OTHER INTELLECTUAL PROPERTY RIGHT.**

**UNLESS EXPRESSLY APPROVED IN WRITING BY AN AUTHORIZED ST REPRESENTATIVE, ST PRODUCTS ARE NOT RECOMMENDED, AUTHORIZED OR WARRANTED FOR USE IN MILITARY, AIR CRAFT, SPACE, LIFE SAVING, OR LIFE SUSTAINING APPLICATIONS, NOR IN PRODUCTS OR SYSTEMS WHERE FAILURE OR MALFUNCTION MAY RESULT IN PERSONAL INJURY, DEATH, OR SEVERE PROPERTY OR ENVIRONMENTAL DAMAGE. ST PRODUCTS WHICH ARE NOT SPECIFIED AS "AUTOMOTIVE GRADE" MAY ONLY BE USED IN AUTOMOTIVE APPLICATIONS AT USER’S OWN RISK.**

Resale of ST products with provisions different from the statements and/or technical features set forth in this document shall immediately void any warranty granted by ST for the ST product or service described herein and shall not create or extend in any manner whatsoever, any liability of ST.

ST and the ST logo are trademarks or registered trademarks of ST in various countries.

Information in this document supersedes and replaces all information previously supplied.

The ST logo is a registered trademark of STMicroelectronics. All other names are the property of their respective owners.

© 2007 STMicroelectronics - All rights reserved

STMicroelectronics group of companies

Australia - Belgium - Brazil - Canada - China - Czech Republic - Finland - France - Germany - Hong Kong - India - Israel - Italy - Japan - Malaysia - Malta - Morocco - Singapore - Spain - Sweden - Switzerland - United Kingdom - United States of America

**www.st.com**