STTH802C

High efficiency ultrafast diode

Datasheet - production data

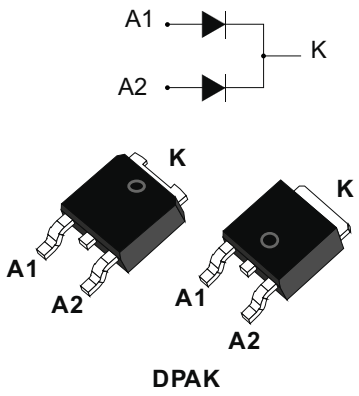

Features

- Suited for SMPS
- Low losses
- Low forward and reverse recovery time
- High surge current capability
- High junction temperature
- ECOPACK®2 compliant component for DPAK on demand

Description

Dual center tap rectifier suited for switched mode power supply and high frequency DC to DC converters.

Packaged in DPAK, this device is intended for use in low voltage, high frequency inverters, freewheeling and polarity protection applications.

Table 1. Device summary

Symbol	Value
$I_{F(AV)}$	2 X 4 A
V_{RRM}	200 V
T_j (max)	175 °C
V_F (typ.)	0.81 V
t_{rr} (typ.)	13 ns

This is information on a product in full production. www.st.com

1 Characteristics

Table 2. Absolute ratings (limiting values at T_j = 25 °C per diode, unless otherwise specified)

Symbol	Parameter			Value	Unit
V_{RRM}	Repetitive peak reverse voltage			200	V
$I_{F(RMS)}$	Forward rms current			10	A
$I_{F(AV)}$	Average forward current, δ = 0.5, square wave	T_c = 155 °C	Per diode	4	A
		T_c = 150 °C	Per device	8	
I_{FSM}	Surge non repetitive forward current		t_p = 10 ms sinusoidal	50	A
T_{stg}	Storage temperature range			-65 to +175	°C
T_j	Maximum operating junction temperature			175	°C

Table 3. Thermal resistances

Symbol	Parameter		Max. value	Unit
$R_{th(j-c)}$	Junction to case	Per diode	4	°C/W
		Total	2.5	
$R_{th(c)}$	Coupling		1.0	

When the diodes 1 and 2 are used simultaneously:

ΔT_j(diode 1) = P(diode1) x $R_{th(j-c)}$(Per diode) + P(diode 2) x $R_{th(c)}$

Table 4. Static electrical characteristics (per diode)

Symbol	Parameter	Test conditions		Min.	Typ.	Max.	Unit
I_R (1)	Reverse leakage current	T_j = 25 °C	$V_R = V_{RRM}$	-		4	µA
		T_j = 125 °C		-	2	40	
V_F (2)	Forward voltage drop	T_j = 25 °C	I_F = 4 A	-		1.10	V
		T_j = 125 °C		-	0.81	0.95	
		T_j = 25 °C	I_F = 8 A	-		1.25	
		T_j = 125 °C		-	0.95	1.10	

1. Pulse test: t_p = 5 ms, δ < 2%
2. Pulse test: t_p = 380 µs, δ < 2%

To evaluate the conduction losses, use the following equation:

$P = 0.80 \times I_{F(AV)} + 0.037 \times I_F{}^2{}_{(RMS)}$

Table 5. Dynamic characteristics (per diode)

Symbol	Parameter	Test conditions		Min.	Typ.	Max.	Unit
t_{rr}	Reverse recovery time	T_j = 25 °C	I_F = 0.5 A I_{RR} = 0.25 A I_R = 1 A	-	13	20	ns
t_{fr}	Forward recovery time		I_F = 4 A dI_F/dt = 100 A/µs V_{FR} = 1.1 x V_{Fmax}	-	50		ns
V_{FP}	Forward recovery voltage		I_F = 4A dI_F/dt = 100 A/µs	-	2.4		V

Figure 1. Average forward power dissipation versus average forward current (per diode)

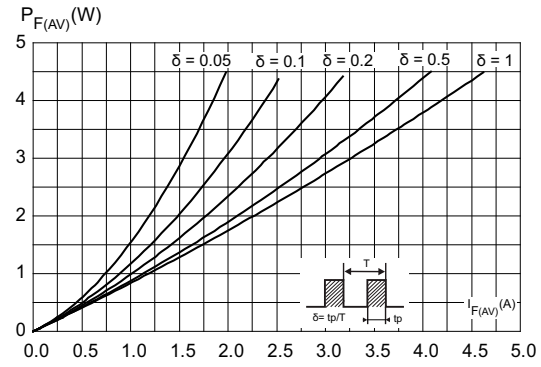

Figure 2. Forward voltage drop versus forward current (per diode)

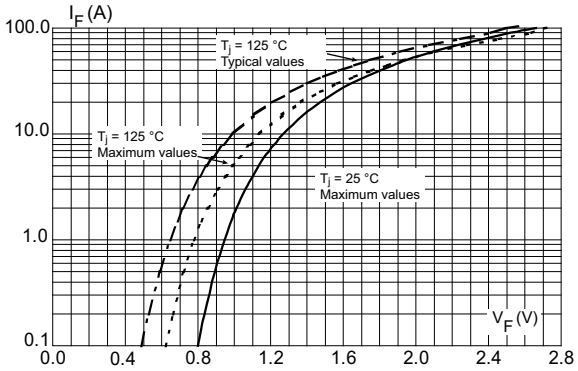

Figure 3. Relative variation of thermal impedance, junction to case, versus pulse duration

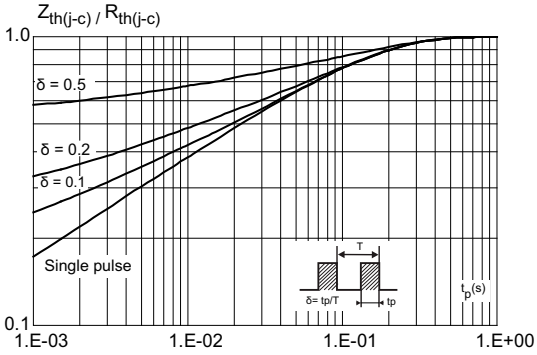

Figure 4. Junction capacitance versus reverse applied voltage (typical values, per diode)

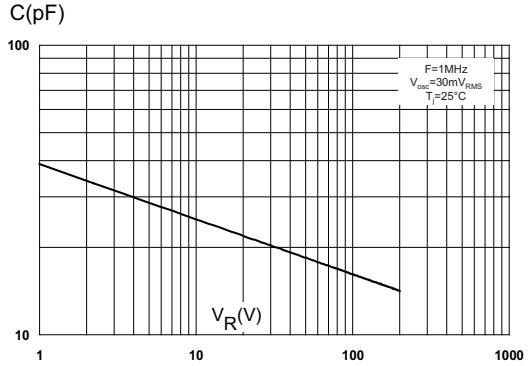

Figure 5. Reverse recovery charges versus dI_F/dt (typical values, per diode)

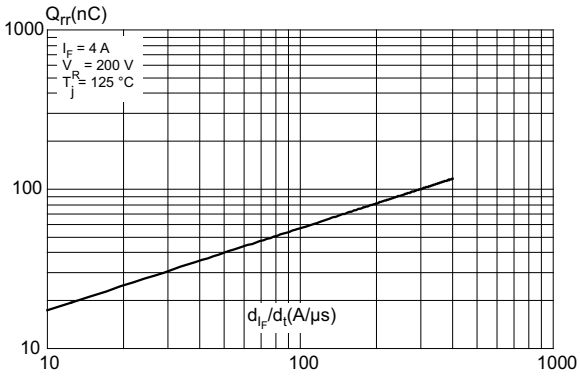

Figure 6. Peak reverse recovery current versus dI_F/dt (typical values, per diode)

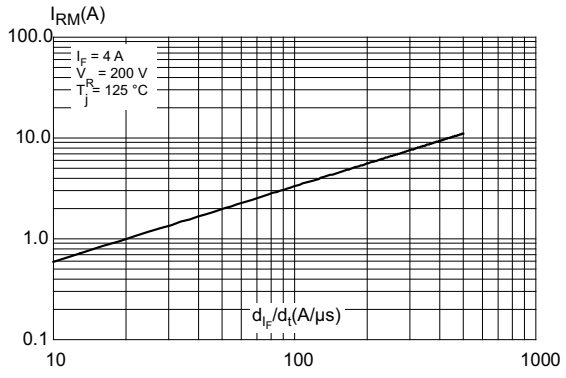

Figure 7. Dynamic parameters versus junction temperature (reference: T_j = 125 °C)

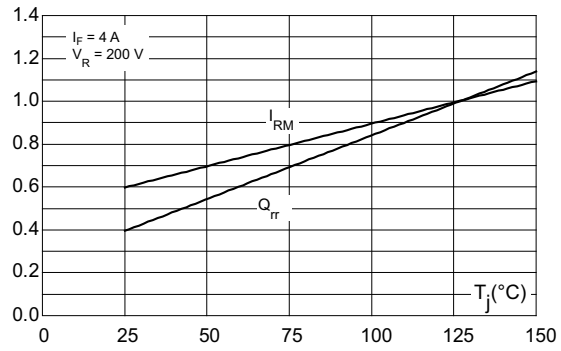

Figure 8. Thermal resistance, junction to ambient, versus copper surface under tab

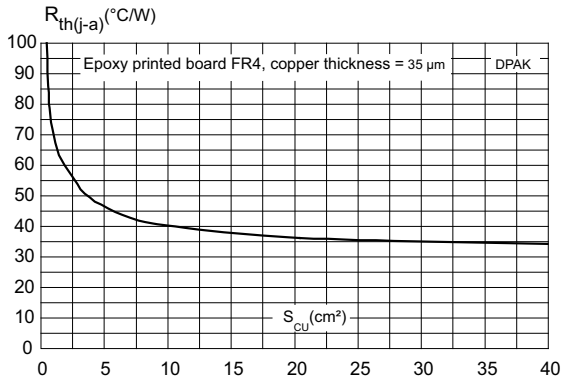

2 Package Information

- Epoxy meets UL94,V0
- Cooling method: by conduction (C)

In order to meet environmental requirements, ST offers these devices in different grades of ECOPACK® packages, depending on their level of environmental compliance. ECOPACK® specifications, grade definitions and product status are available at: *www.st.com*. ECOPACK® is an ST trademark.

2.1 DPAK package information

Figure 9. DPAK package outline

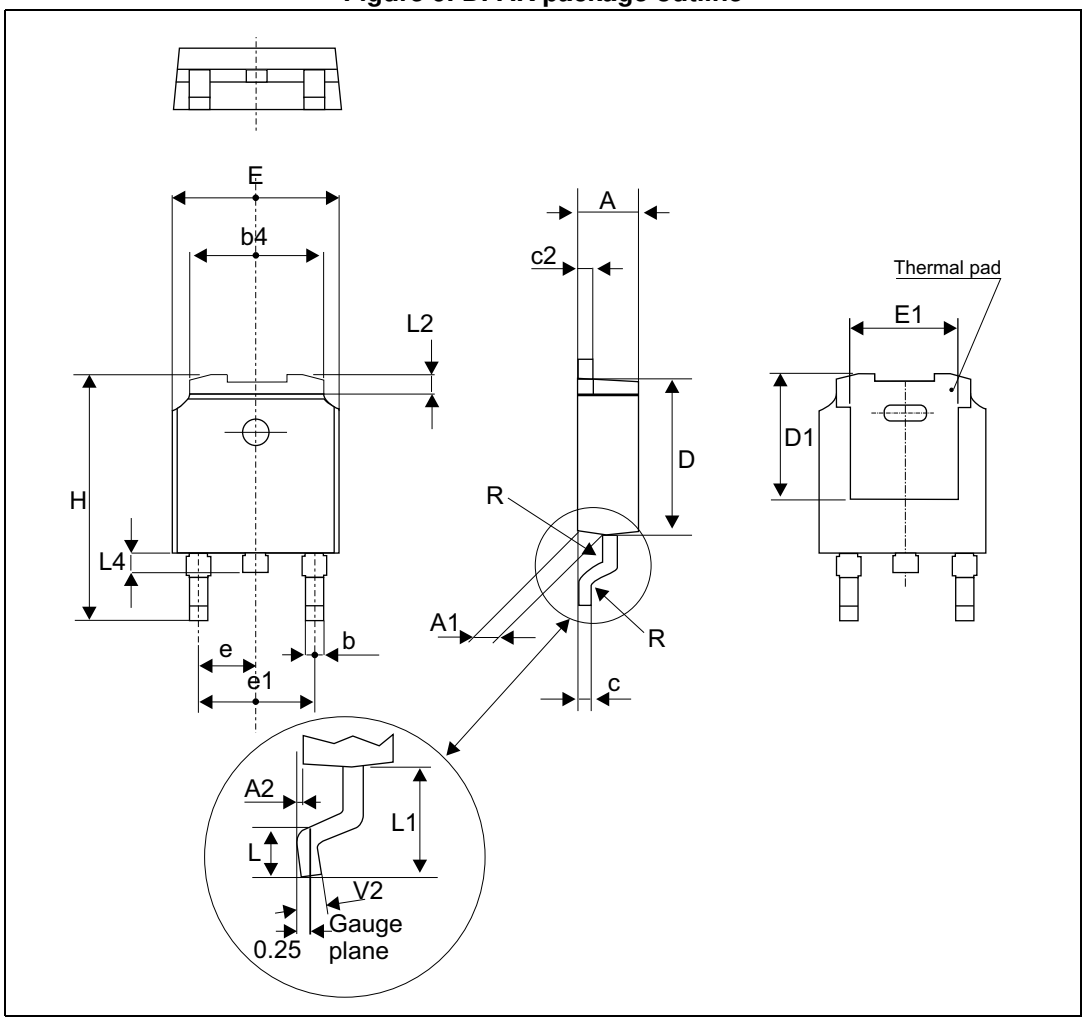

Note: This package drawing may slightly differ from the physical package. However, all the specified dimensions are guaranteed.

Table 6. DPAK package mechanical data

Ref.	Dimensions					
	Millimeters			Inches		
	Min.	Typ.	Max.	Min.	Typ.	Max.
A	2.18		2.40	0.085		0.094
A1	0.90		1.10	0.035		0.043
A2	0.03		0.23	0.001		0.009
b	0.64		0.90	0.025		0.035
b4	4.95		5.46	0.194		0.214
c	0.46		0.61	0.018		0.024
c2	0.46		0.60	0.018		0.023
D	5.97		6.22	0.235		0.244
D1	4.95		5.60	0.194		0.220
E	6.35		6.73	0.250		0.264
E1	4.32		5.50	0.170		0.216
e		2.28			0.090	
e1	4.40		4.70	0.173		0.185
H	9.35		10.40	0.368		0.409
L	1.00		1.78	0.039		0.070
L2			1.27			0.050
L4	0.60		1.02	0.023		0.040
V2	-8°		+8°	-8°		8°

Figure 10. DPAK footprint dimensions (in mm)

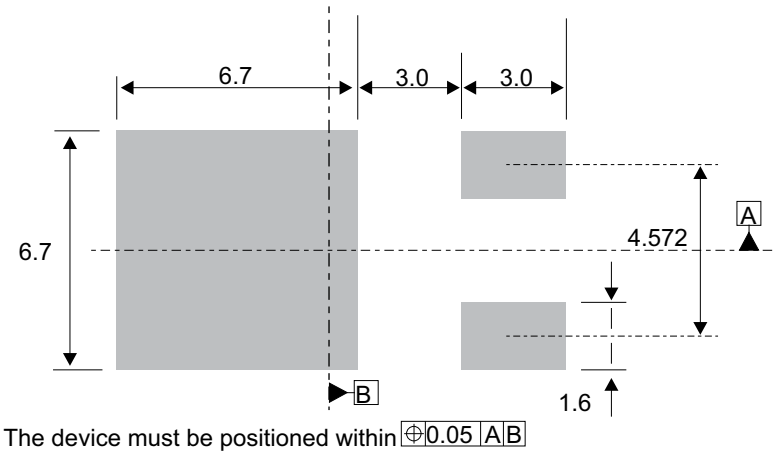

3 Ordering Information

Table 7. Ordering information

Order code	Marking	Package	Weight	Base qty	Delivery mode
STTH802CB-TR	STTH8 02CB	DPAK	0.3 g	2500	Tape and reel

4 Revision history

Table 8. Document revision history

Date	Revision	Description of Changes
26-Jun-2012	1	First release.
04-Nov-2014	2	Removed TO-220AB and TO-220FPAB package information. Reformatted to current standard.
02-Nov-2016	3	Updated DPAK package information and reformatted to current standard.

IMPORTANT NOTICE – PLEASE READ CAREFULLY

STMicroelectronics NV and its subsidiaries (“ST”) reserve the right to make changes, corrections, enhancements, modifications, and improvements to ST products and/or to this document at any time without notice. Purchasers should obtain the latest relevant information on ST products before placing orders. ST products are sold pursuant to ST’s terms and conditions of sale in place at the time of order acknowledgement.

Purchasers are solely responsible for the choice, selection, and use of ST products and ST assumes no liability for application assistance or the design of Purchasers’ products.

No license, express or implied, to any intellectual property right is granted by ST herein.

Resale of ST products with provisions different from the information set forth herein shall void any warranty granted by ST for such product.

ST and the ST logo are trademarks of ST. All other product or service names are the property of their respective owners.

Information in this document supersedes and replaces information previously supplied in any prior versions of this document.

© 2016 STMicroelectronics – All rights reserved