STPS2545C

Power Schottky rectifier

Datasheet - production data

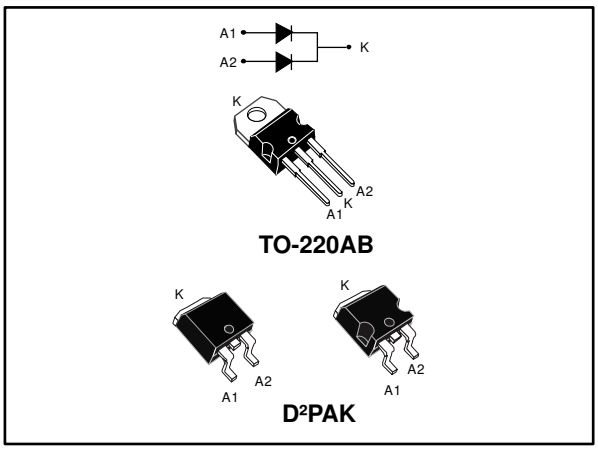

Features

- Very small conduction losses
- Negligible switching losses
- Extremely fast switching
- Low thermal resistance
- Avalanche capability specified
- High frequency operation
- ECOPACK®2 compliant component (on demand for D²PAK)

Description

Dual center tab Schottky rectifier suited for switch mode power supplies and high frequency DC to DC converters.

This device is especially intended for use in low voltage, high frequency inverters, free-wheeling and polarity protection applications.

Table 1: Device summary

Symbol	Value
$I_{F(AV)}$	2 x 12.5 A
V_{RRM}	45 V
T_j(max.)	175 °C
V_F(typ.)	0.5 V

This is information on a product in full production.

www.st.com

1 Characteristics

Table 2: Absolute ratings (limiting values, per diode, at 25 °C, unless otherwise specified)

Symbol	Parameter			Value	Unit
V_{RRM}	Repetitive peak reverse voltage			45	V
$I_{F(RMS)}$	Forward rms current			30	A
$I_{F(AV)}$	Average forward current δ = 0.5, square wave	T_C = 160 °C	Per diode	12.5	A
		T_C = 155 °C	Per device	25	
I_{FSM}	Surge non repetitive forward current	t_p = 10 ms sinusoidal		200	A
P_{ARM}	Repetitive peak avalanche power	t_p = 10 µs, T_j = 125 °C		345	W
T_{stg}	Storage temperature range			-65 to +175	°C
T_j	Maximum operating junction temperature (1)			175	°C

Notes:

(1)$(dP_{tot}/dT_j) < (1/R_{th(j-a)})$ condition to avoid thermal runaway for a diode on its own heatsink.

Table 3: Thermal parameters

Symbol	Parameter		Max. value	Unit
$R_{th(j-c)}$	Junction to case	Per diode	1.6	°C/W
		Total	1.1	
$R_{th(c)}$	Coupling		0.6	°C/W

When the diodes 1 and 2 are used simultaneously:

ΔT_j(diode 1) = P(diode1) x $R_{th(j-c)}$(Per diode) + P(diode 2) x $R_{th(c)}$

Table 4: Static electrical characteristics (per diode)

Symbol	Parameter	Test conditions		Min.	Typ.	Max.	Unit
I_R (1)	Reverse leakage current	T_j = 25 °C	$V_R = V_{RRM}$	-		125	µA
		T_j = 125 °C		-	9	25	mA
V_F (1)	Forward voltage drop	T_j = 125 °C	I_F = 12.5 A	-	0.50	0.57	V
		T_j = 25 °C	I_F = 25 A	-		0.84	
		T_j = 125 °C		-	0.65	0.72	

Notes:

(1)Pulse test: t_p = 380 µs, δ < 2%

To evaluate the conduction losses, use the following equation:

$P = 0.42 \times I_{F(AV)} + 0.012 \times I_{F^2(RMS)}$

1.1 Characteristics (curves)

Figure 1: Conduction losses versus average current, per diode)

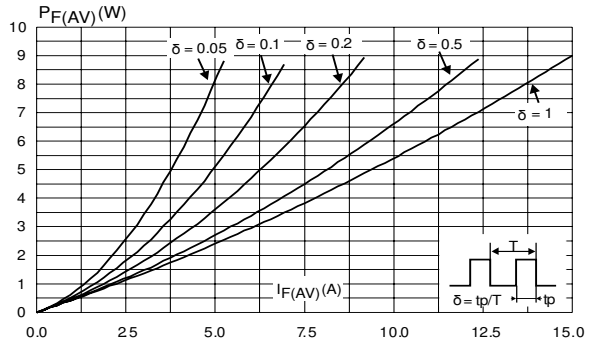

Figure 2: Average forward current versus ambient temperature (δ = 0.5, per diode)

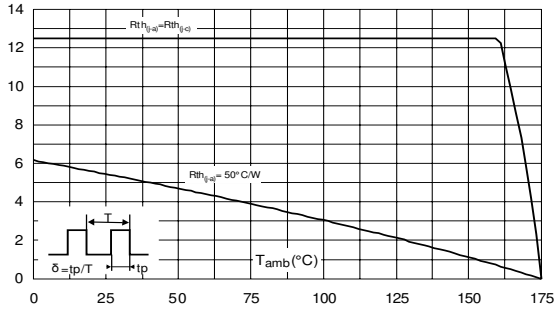

Figure 3: Normalized avalanche power derating versus pulse duration (T_j = 125 °C)

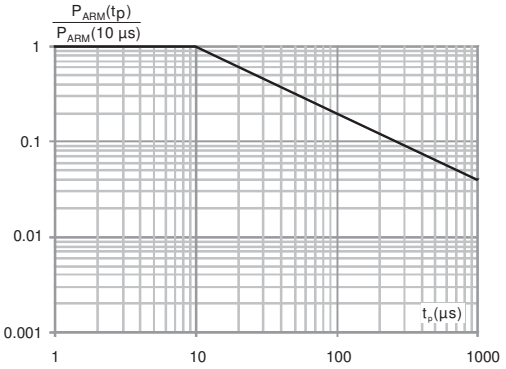

Figure 4: Relative variation of thermal impedance junction to case versus pulse duration

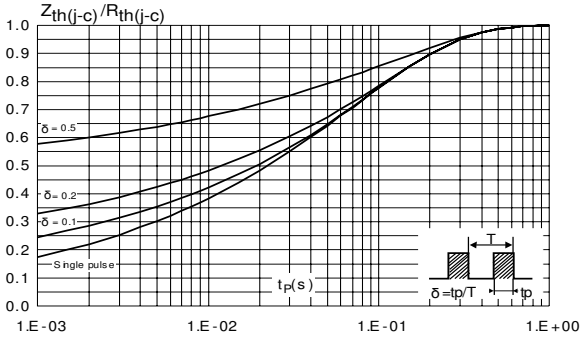

Figure 5: Reverse leakage current versus reverse voltage applied (typical values, per diode)

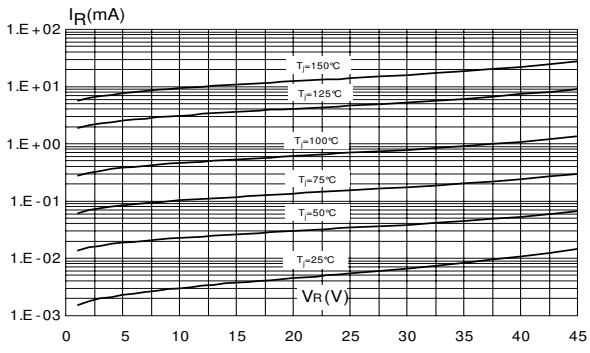

Figure 6: Junction capacitance versus reverse voltage applied (typical values, per diode)

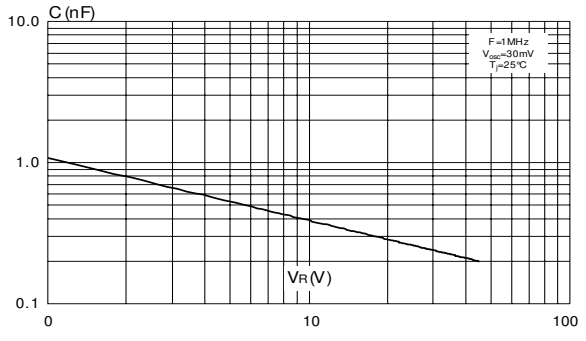

Figure 7: Forward voltage drop versus forward current (per diode)

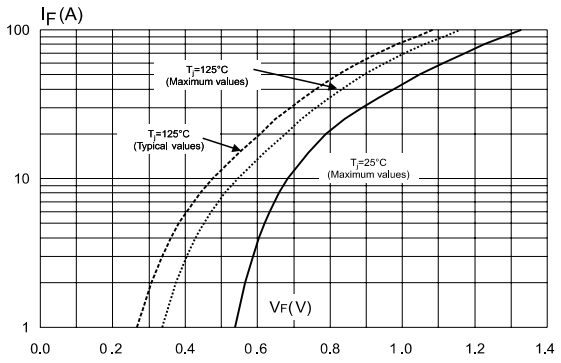

Figure 8: Thermal resistance junction to ambient versus copper surface under tab

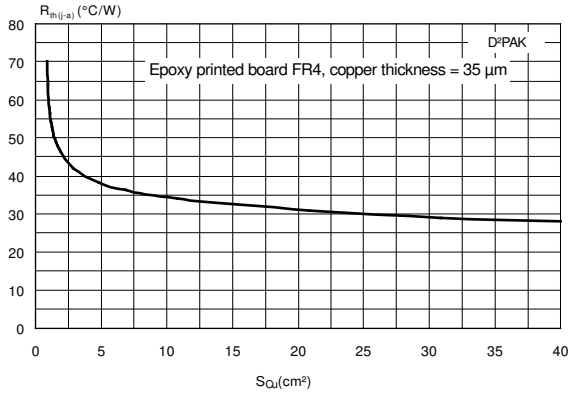

2 Package information

In order to meet environmental requirements, ST offers these devices in different grades of ECOPACK® packages, depending on their level of environmental compliance. ECOPACK® specifications, grade definitions and product status are available at: ***www.st.com***. ECOPACK® is an ST trademark.

- Cooling method: by conduction (C)
- Epoxy meets UL 94,V0
- Recommended torque value: 0.55 N·m (for TO-220AB)
- Maximum torque value: 0.7 N·m (for TO-220AB)

2.1 TO-220AB package information

Figure 9: TO-220AB package outline

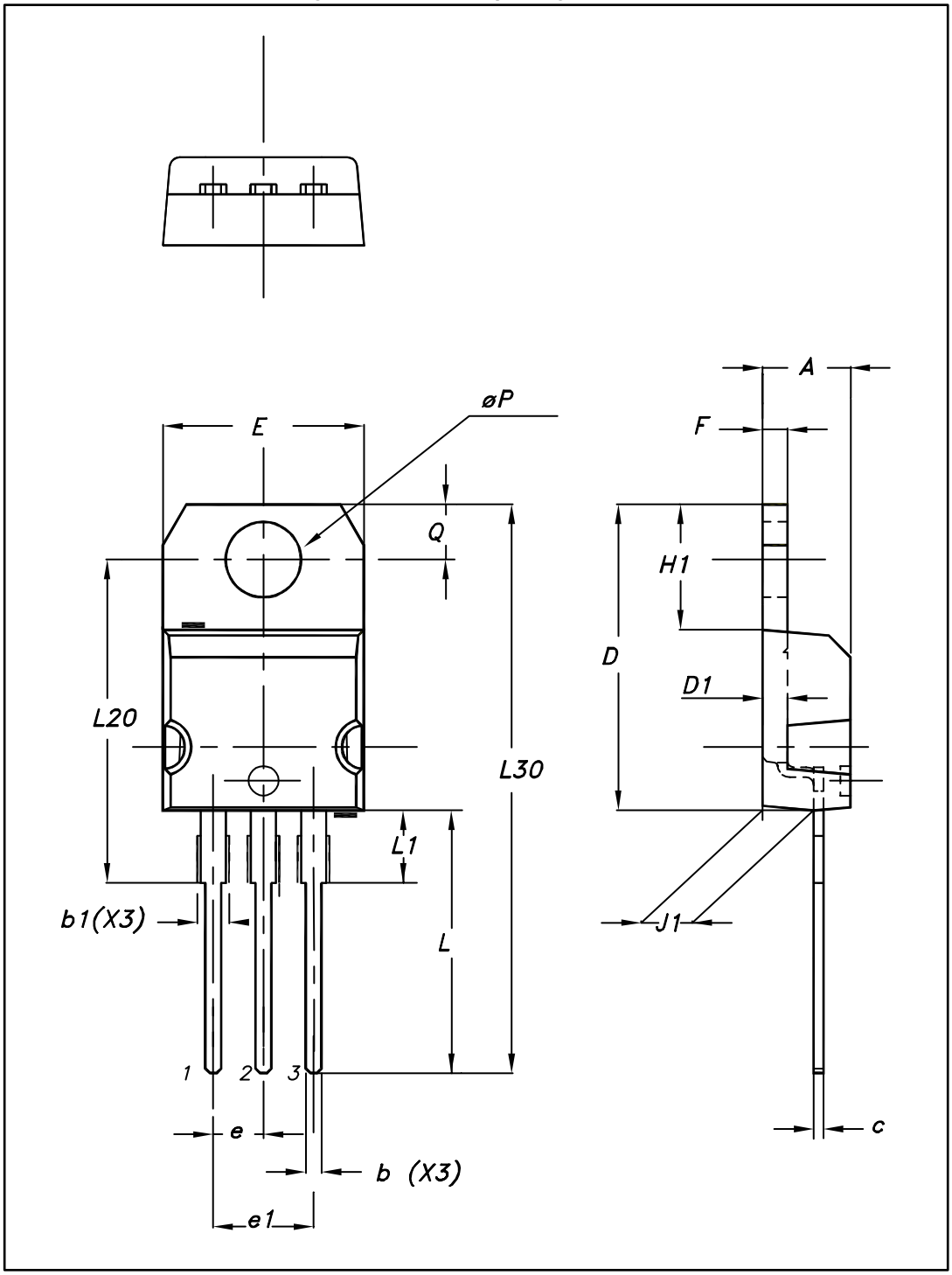

Table 5: TO-220AB package mechanical data

Ref.	Dimensions			
	Millimeters		Inches	
	Min.	Max.	Min.	Max.
A	4.40	4.60	0.173	0.181
b	0.61	0.88	0.240	0.035
b1	1.14	1.70	0.045	0.067
c	0.48	0.70	0.019	0.028
D	15.25	15.75	0.600	0.620
D1	1.27 typ.		0.050 typ.	
E	10.00	10.40	0.394	0.409
e	2.40	2.70	0.094	0.106
e1	4.95	5.15	0.195	0.203
F	1.23	1.32	0.048	0.052
H1	6.20	6.60	0.244	0.260
J1	2.40	2.72	0.094	0.107
L	13.00	14.00	0.512	0.551
L1	3.50	3.93	0.138	0.155
L20	16.40 typ.		0.646 typ.	
L30	28.90 typ.		1.138 typ.	
θP	3.75	3.85	0.148	0.152
Q	2.65	2.95	0.104	0.116

2.2 D²PAK package information

Figure 10: D²PAK package outline

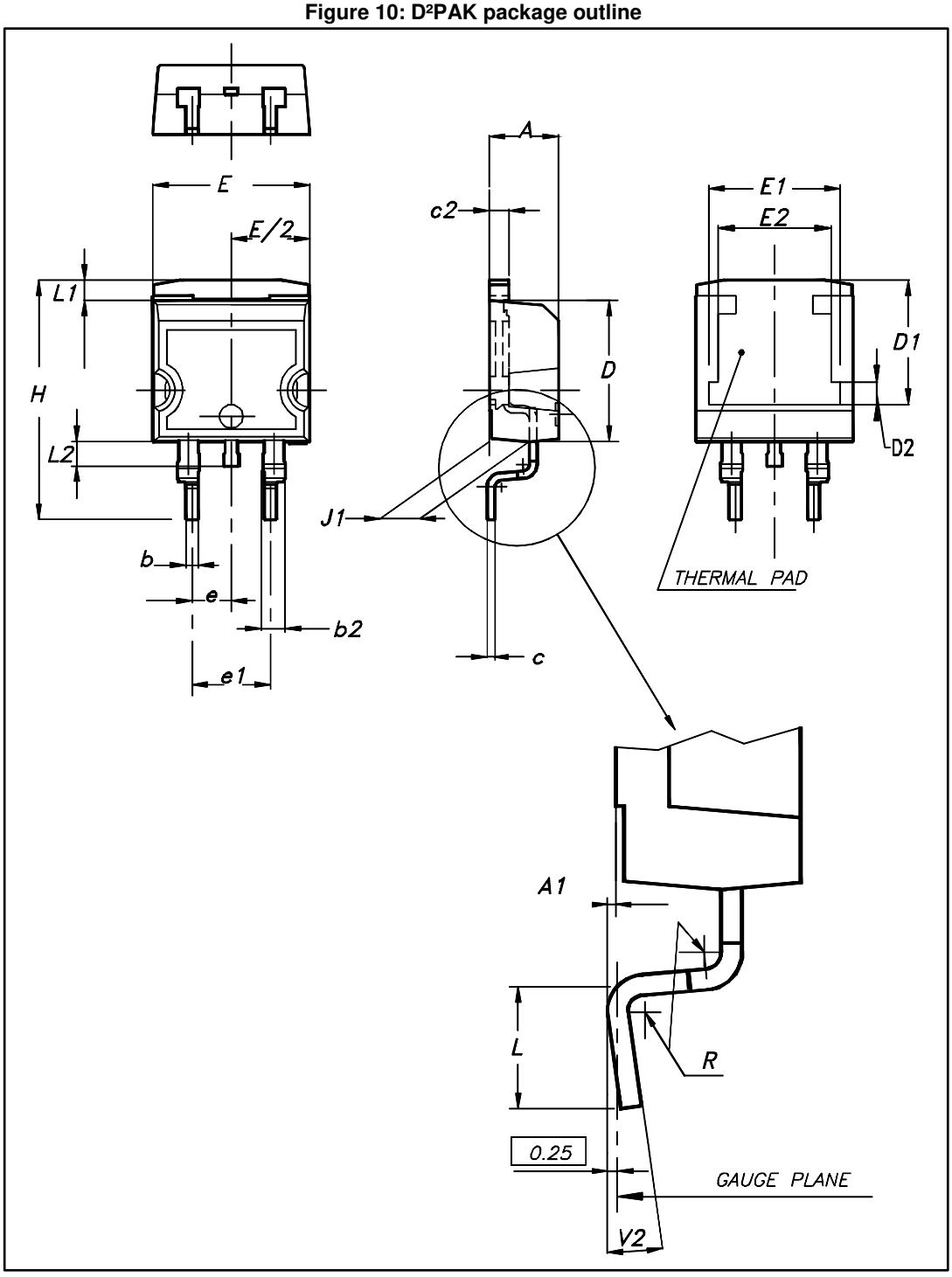

This package drawing may slightly differ from the physical package. However, all the specified dimensions are guaranteed.

Table 6: D²PAK package mechanical data

Ref.	Dimensions			
	Millimeters		Inches	
	Min.	Max.	Min.	Max.
A	4.36	4.60	0.172	0.181
A1	0.00	0.25	0.000	0.010
b	0.70	0.93	0.028	0.037
b2	1.14	1.70	0.045	0.067
c	0.38	0.69	0.015	0.027
c2	1.19	1.36	0.047	0.053
D	8.60	9.35	0.339	0.368
D1	6.90	8.00	0.272	0.311
D2	1.10	1.50	0.043	0.060
E	10.00	10.55	0.394	0.415
E1	8.10	8.90	0.319	0.346
E2	6.85	7.25	0.266	0.282
e	2.54 typ.		0.100	
e1	4.88	5.28	0.190	0.205
H	15.00	15.85	0.591	0.624
J1	2.49	2.90	0.097	0.112
L	1.90	2.79	0.075	0.110
L1	1.27	1.65	0.049	0.065
L2	1.30	1.78	0.050	0.070
R	0.4 typ.		0.015	
V2	0°	8°	0°	8°

Figure 11: D²PAK recommended footprint (dimensions in mm)

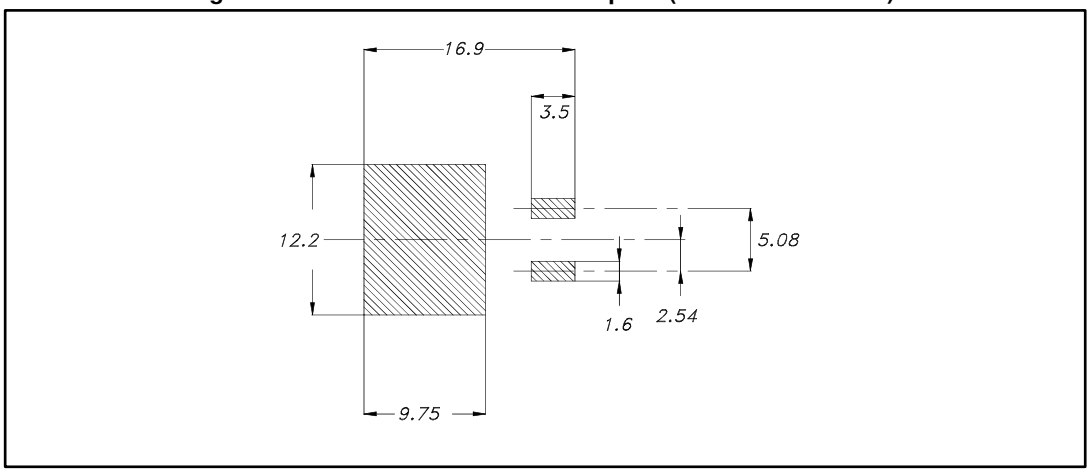

3 Ordering information

Table 7: Ordering information

Order code	Marking	Package	Weight	Base qty.	Delivery mode
STPS2545CT	STPS2545CT	TO-220AB	1.95 g	50	Tube
STPS2545CG-TR	STPS2545CG	D²PAK	1.38 g	1000	Tape and reel

4 Revision history

Table 8: Document revision history

Date	Revision	Changes
July-2003	2A	Last release.
21-Jun-2010	3	Updated ECOPACK statement.
28-jun-2012	4	Corrected typographical error in *Table 3*.
12-May-2017	5	Removed TO-220FPAB package.

IMPORTANT NOTICE – PLEASE READ CAREFULLY

STMicroelectronics NV and its subsidiaries (“ST”) reserve the right to make changes, corrections, enhancements, modifications, and improvements to ST products and/or to this document at any time without notice. Purchasers should obtain the latest relevant information on ST products before placing orders. ST products are sold pursuant to ST’s terms and conditions of sale in place at the time of order acknowledgement.

Purchasers are solely responsible for the choice, selection, and use of ST products and ST assumes no liability for application assistance or the design of Purchasers’ products.

No license, express or implied, to any intellectual property right is granted by ST herein.

Resale of ST products with provisions different from the information set forth herein shall void any warranty granted by ST for such product.

ST and the ST logo are trademarks of ST. All other product or service names are the property of their respective owners.

Information in this document supersedes and replaces information previously supplied in any prior versions of this document.

© 2017 STMicroelectronics – All rights reserved