STP200NF03
STB200NF03 - STB200NF03-1

N-channel 30V - 0.0032Ω - 120A - D²PAK/I²PAK/TO-220
STripFET™ III Power MOSFET

General features

Type	V_{DSS}	$R_{DS(on)}$	I_D
STP200NF03	30V	<0.0037Ω	120A(1)
STB200NF03	30V	<0.0037Ω	120A(1)
STB200NF03-1	30V	<0.0037Ω	120A(1)

1. Current Limited by Package

- Standard threshold drive
- 100% avalanche tested

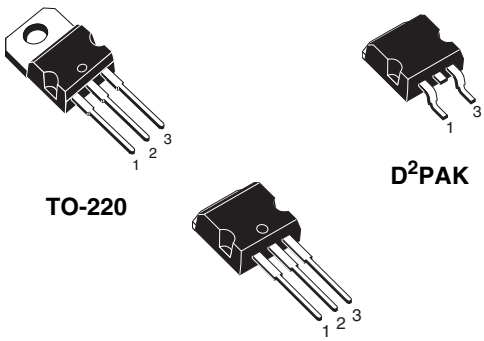

Description

This Power MOSFET is the latest development of STMicroelectronics unique "Single Feature Size™" strip-based process. The resulting transistor shows extremely high packing density for low on-resistance, rugged avalanche characteristics and less critical alignment steps therefore a remarkable manufacturing reproducibility.

Internal schematic diagram

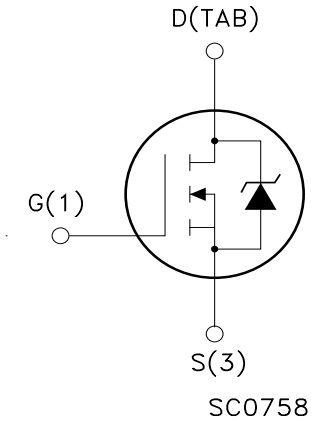

Applications

- Switching application

Order codes

Part number	Marking	Package	Packaging
STB200NF03T4	B200NF03	D²PAK	Tape & reel
STB200NF03-1	B200NF03	I²PAK	Tube
STP200NF03	P200NF03	TO-220	Tube

Contents

1 Electrical ratings 3

2 Electrical characteristics 4

2.1 Electrical characteristics (curves) 6

3 Spice thermal model 10

4 Test circuit 11

5 Package mechanical data 12

6 Packaging mechanical data 16

7 Revision history 17

1 Electrical ratings

Table 1. Absolute maximum ratings

Symbol	Parameter	Value	Unit
V_{DS}	Drain-source voltage (V_{GS} = 0)	30	V
V_{DGR}	Drain-gate voltage (R_{GS} = 20 kΩ)	30	V
V_{GS}	Gate- source voltage	± 20	V
I_D(1)	Drain current (continuous) at T_C = 25°C	120	A
I_D(1)	Drain current (continuous) at T_C = 100°C	120	A
I_{DM}(2)	Drain current (pulsed)	480	A
P_{tot}	Total dissipation at T_C = 25°C	300	W
	Derating factor	2.0	W/°C
dv/dt(3)	Peak diode recovery voltage slope	1.5	V/ns
E_{AS} (4)	Single pulse avalanche energy	1.45	J
T_{stg}	Storage temperature	-55 to 175	°C
T_j	Max. operating junction temperature		

1. Value limited by package
2. Pulse width limited by safe operating area.
3. $I_{SD} \leq 120A$, di/dt ≤400A/µs, $V_{DD} \leq V_{(BR)DSS}$, $T_j \leq T_{JMAX}$
4. Starting T_j = 25 °C, I_D = 60A, V_{DD} = 25V

Table 2. Thermal data

Rthj-case	Thermal resistance junction-case max	0.5	°C/W
Rthj-amb	Thermal resistance junction-ambient max	62.5	°C/W
Rthj-pcb	Thermal resistance junction-pcb	see curve *13* and *14*	
T_J	Maximum lead temperature for soldering purpose(1)	300	°C

1. for 10 sec. 1.6mm from case

2 Electrical characteristics

(T_{CASE}=25°C unless otherwise specified)

Table 3. On/off states

Symbol	Parameter	Test conditions	Min.	Typ.	Max.	Unit
$V_{(BR)DSS}$	Drain-source breakdown voltage	I_D = 250µA, V_{GS} =0	30			V
I_{DSS}	Zero gate voltage drain current (V_{GS} = 0)	V_{DS} = max ratings V_{DS} = max ratings, T_C = 125°C			1 10	µA µA
I_{GSS}	Gate-body leakage current (V_{DS} = 0)	V_{GS} = ± 20V			±100	nA
$V_{GS(th)}$	Gate threshold voltage	V_{DS} = V_{GS}, I_D = 250µA	2		4	V
$R_{DS(on)}$	Static drain-source on resistance	V_{GS} = 10V, I_D = 60A		0.0032	0.0036	Ω

Table 4. Dynamic

Symbol	Parameter	Test conditions	Min.	Typ.	Max.	Unit
g_{fs} (1)	Forward transconductance	V_{DS}= 15V , I_D = 60A		200		S
C_{iss} C_{oss} C_{rss}	Input capacitance Output capacitance Reverse transfer capacitance	V_{DS} = 25V, f = 1MHz, V_{GS} = 0		4950 1750 280		pF pF pF
$t_{d(on)}$ t_r $t_{d(off)}$ t_f	Turn-on delay time Rise time Turn-off delay time Fall time	V_{DD} = 15V, I_D = 60A R_G = 4.7Ω V_{GS} = 10V (see *Figure 19*)		30 195 75 60		ns ns ns ns
Q_g Q_{gs} Q_{gd}	Total gate charge Gate-source charge Gate-drain charge	V_{DD} = 24V, I_D = 120A, V_{GS} = 10V (see *Figure 20*)		113 32 41	140	nC nC nC

1. Pulsed: Pulse duration = 300 µs, duty cycle 1.5%.

Table 5. Source drain diode

Symbol	Parameter	Test conditions	Min.	Typ.	Max.	Unit
I_{SD} I_{SDM} (1)	Source-drain current Source-drain current (pulsed)				120 480	A A
V_{SD} (2)	Forward on voltage	I_{SD} = 120A, V_{GS} = 0			1.3	V
t_{rr} Q_{rr} I_{RRM}	Reverse recovery time Reverse recovery charge Reverse recovery current	I_{SD} = 120A, di/dt = 100A/µs, V_{DD} = 25V, T_j = 150°C (see *Figure 21*)		70 170 5		ns nC A

1. Pulse width limited by safe operating area.
2. Pulsed: Pulse duration = 300 µs, duty cycle 1.5%

2.1 Electrical characteristics (curves)

Figure 1. Safe operating area

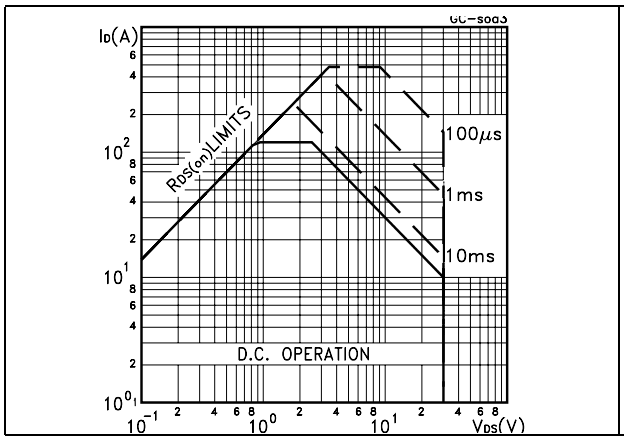

Figure 2. Thermal impedance

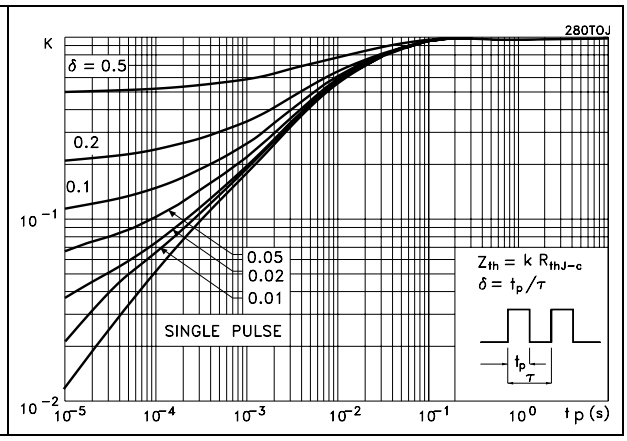

Figure 3. Output characteristics

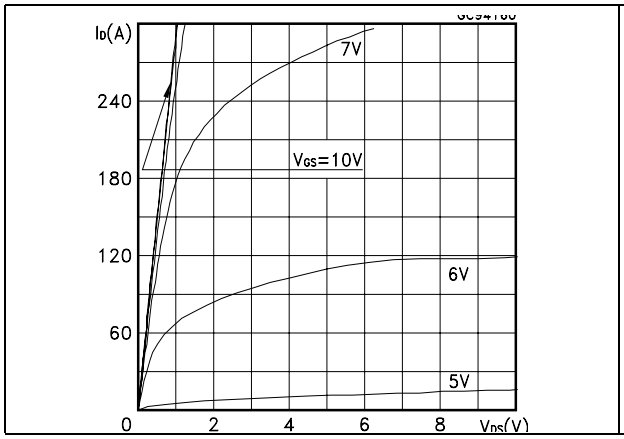

Figure 4. Transfer characteristics

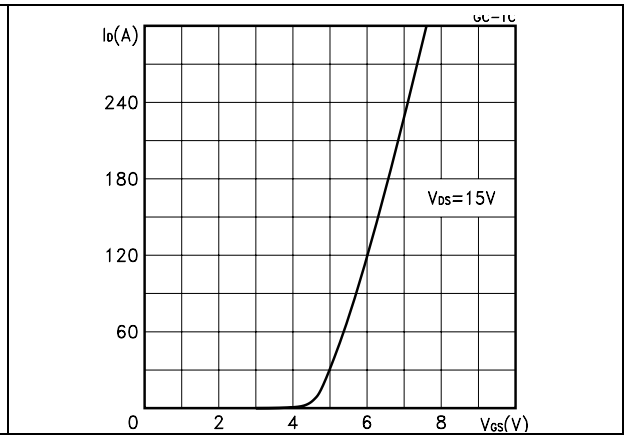

Figure 5. Transconductance

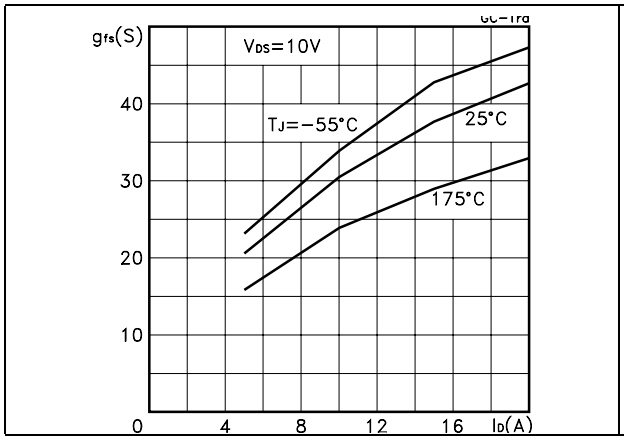

Figure 6. Static drain-source on resistance

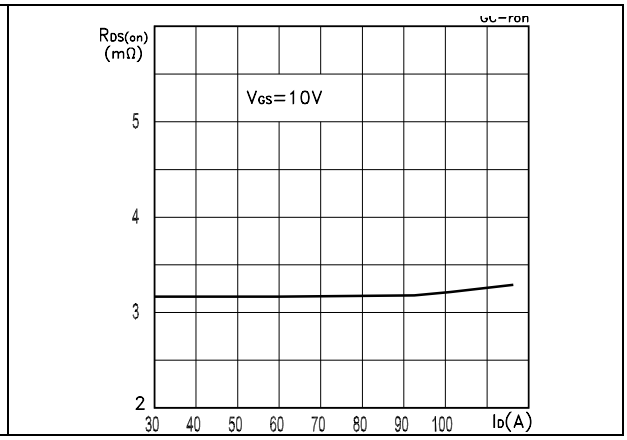

Figure 7. Gate charge vs. gate-source voltage

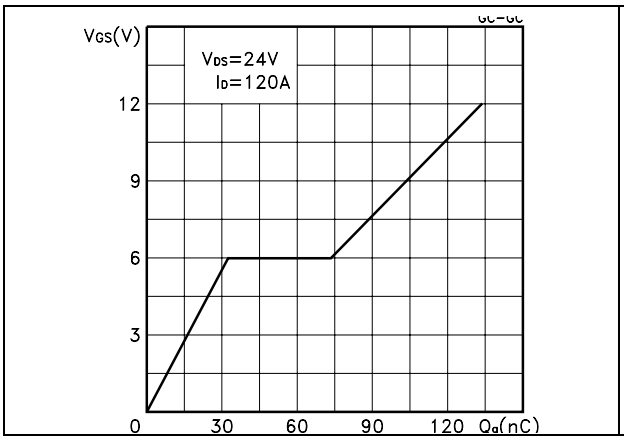

Figure 8. Capacitance variations

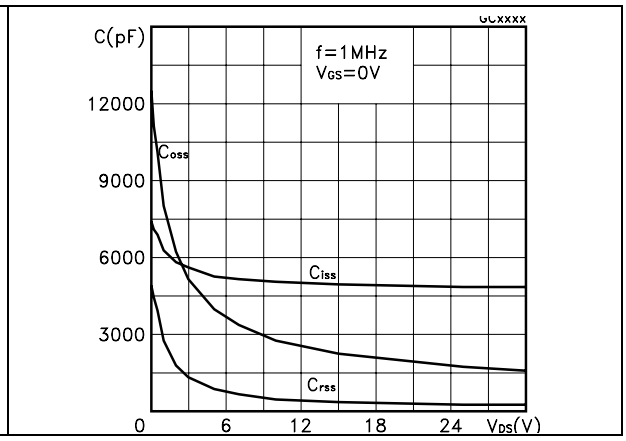

Figure 9. Normalized gate threshold voltage vs. temperature

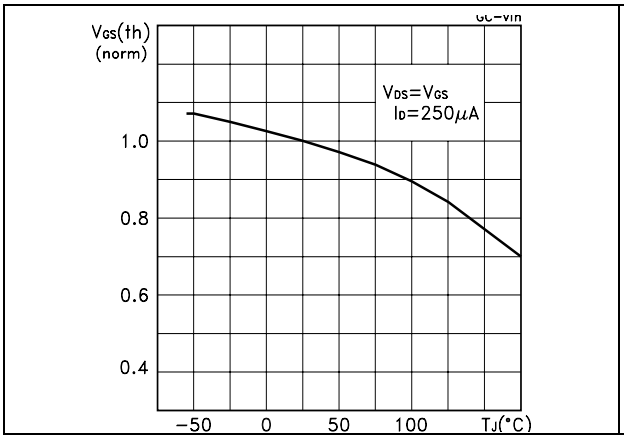

Figure 10. Normalized on resistance vs. temperature

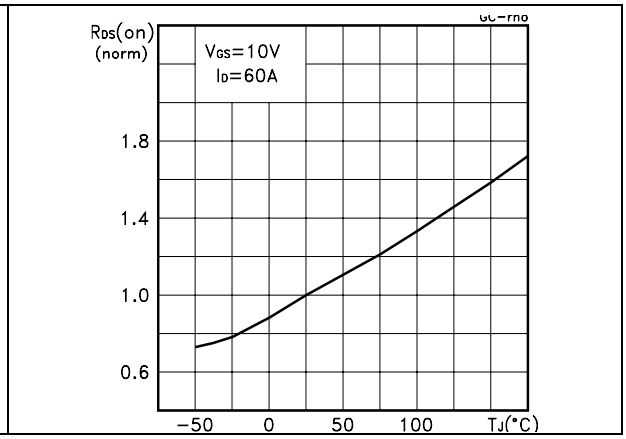

Figure 11. Normalized B_{VDSS} vs. temperature

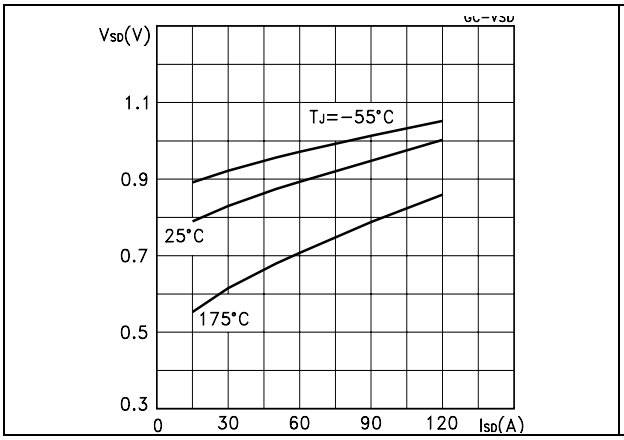

Figure 12. Source-drain diode forward characteristics

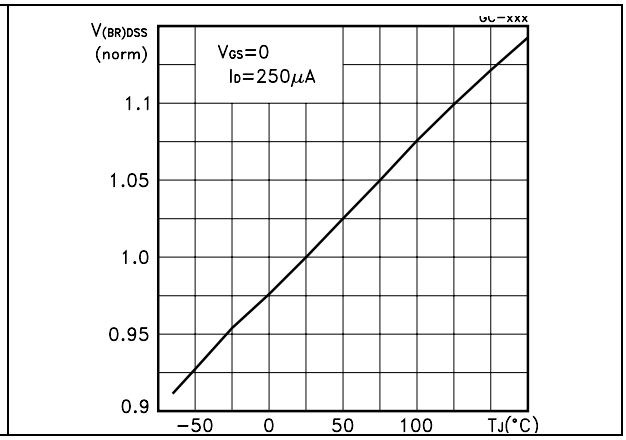

Figure 13. Thermal resistance rthj-a vs. PCB copper area

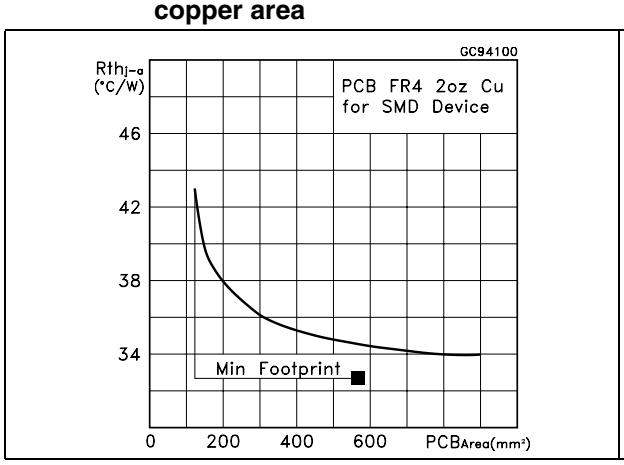

Figure 14. Max power dissipation vs. PCB copper area

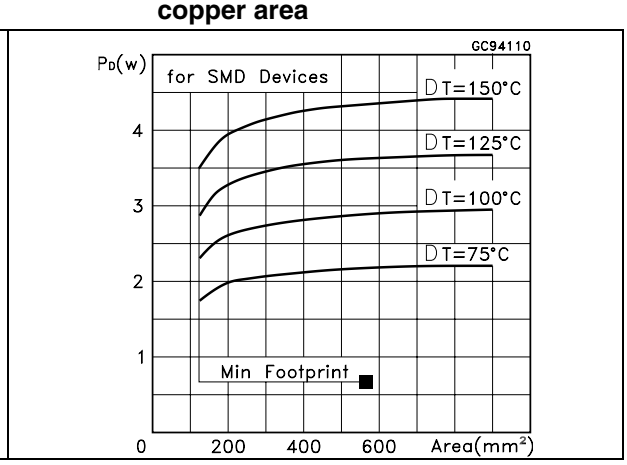

Figure 15. Power Derating vs. Tc

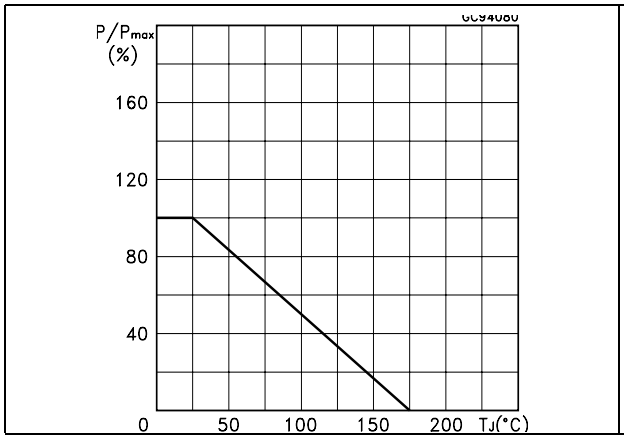

Figure 16. Max Id Current vs. Tc

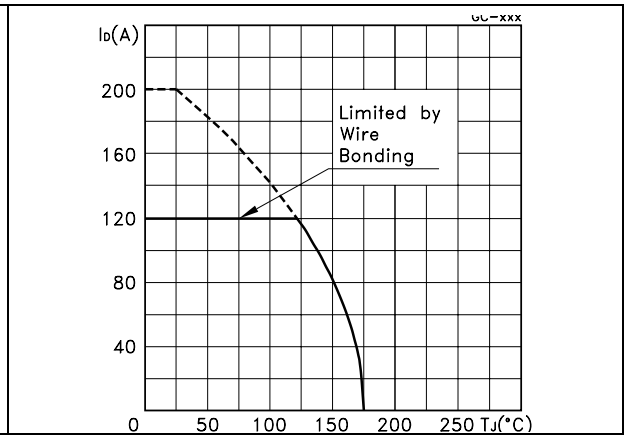

Figure 17. Allowable Iav vs. Time in Avalanche

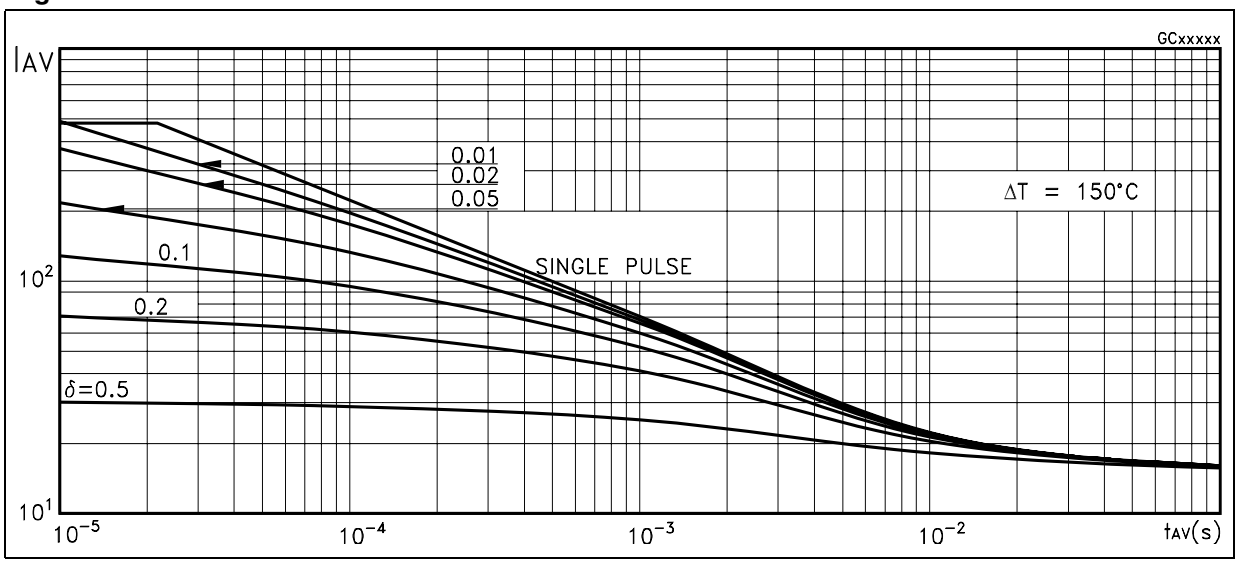

The previous curve gives the safe operating area for unclamped inductive loads, single pulse or repetitive, under the following conditions:

$P_{D(AVE)} = 0.5 * (1.3 * BV_{DSS} * I_{AV})$

$E_{AS(AR)} = P_{D(AVE)} * t_{AV}$

Where:

I_{AV} is the Allowable Current in Avalanche

$P_{D(AVE)}$ is the Average Power Dissipation in Avalanche (Single Pulse)

t_{AV} is the Time in Avalanche

To de rate above 25 ^{o}C, at fixed I_{AV}, the following equation must be applied:

$I_{AV} = 2 * (T_{jmax} - T_{CASE})/ (1.3 * BV_{DSS} * Z_{th})$

Where:

$Z_{th} = K * R_{th}$ is the value coming from Normalized Thermal Response at fixed pulse width equal to T_{AV}.

3 Spice thermal model

Table 6. Spice parameters

Parameter	Node	Value
CTHERM1	5 - 4	0.011
CTHERM2	4 - 3	0.0012
CTHERM3	3 - 2	0.05
CTHERM4	2 - 1	0.1
RTHERM1	5 - 4	0.09
RTHERM2	4 - 3	0.02
RTHERM3	3 - 2	0.11
RTHERM4	2 - 1	0.17

Figure 18. Circuit

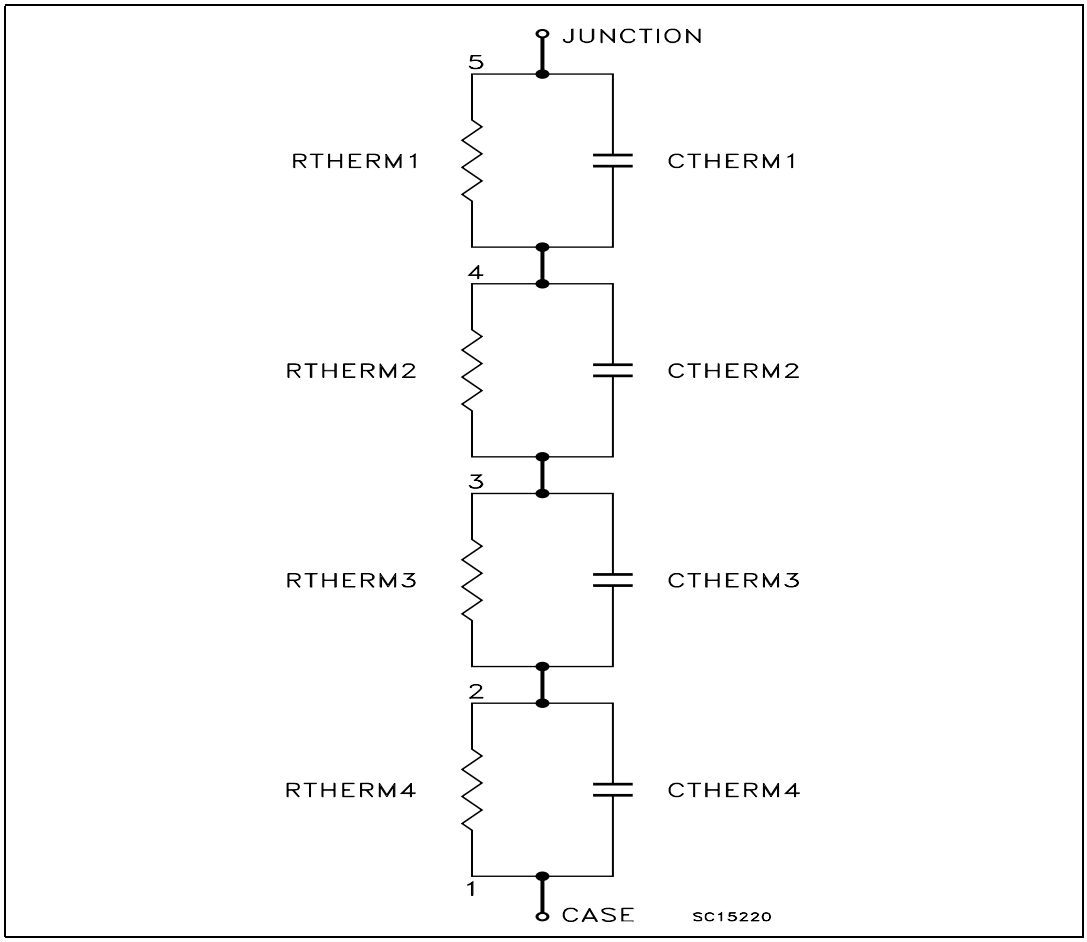

4 Test circuit

Figure 19. Switching times test circuit for resistive load

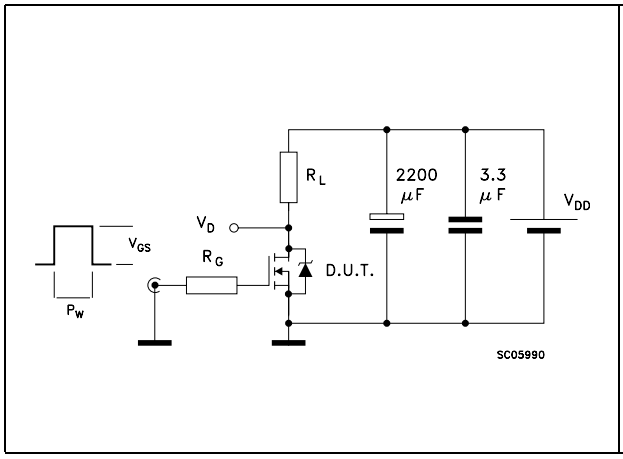

Figure 20. Gate charge test circuit

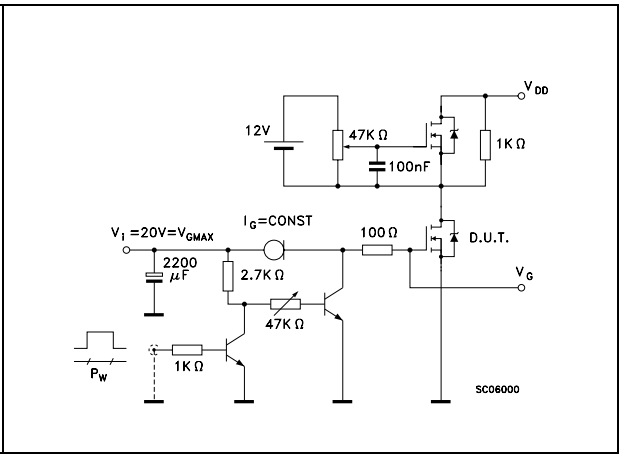

Figure 21. Test circuit for inductive load switching and diode recovery times

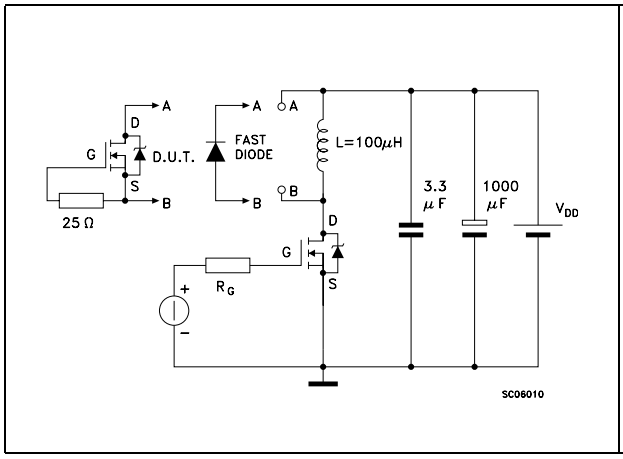

Figure 22. Unclamped Inductive load test circuit

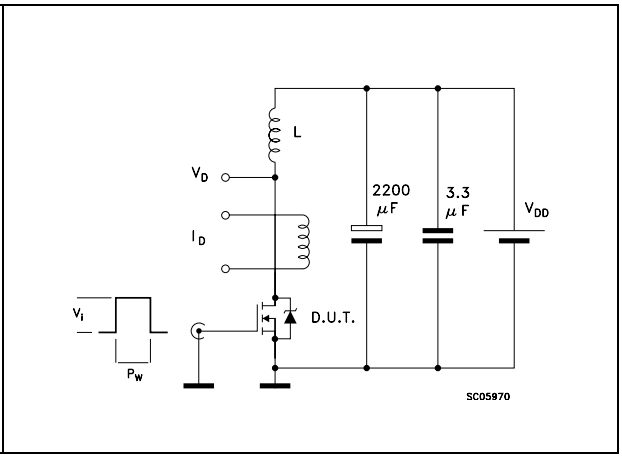

Figure 23. Unclamped inductive waveform

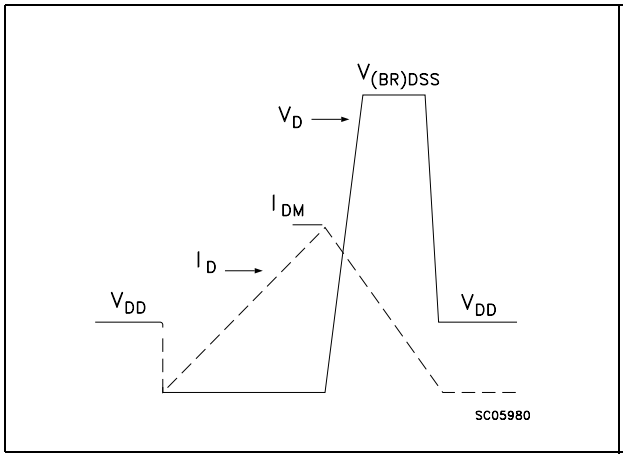

Figure 24. Switching time waveform

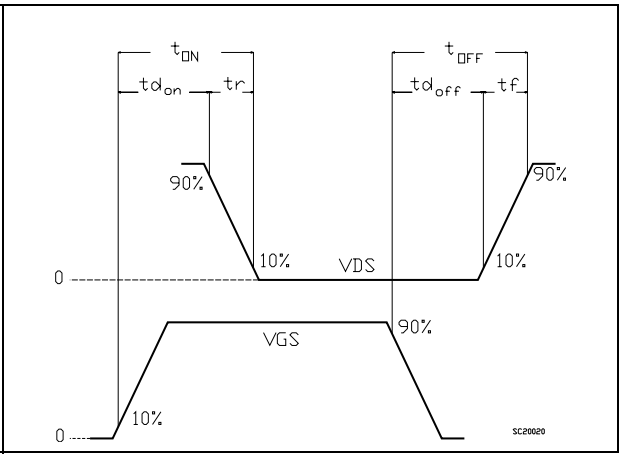

5 Package mechanical data

In order to meet environmental requirements, ST offers these devices in ECOPACK® packages. These packages have a Lead-free second level interconnect. The category of second level interconnect is marked on the package and on the inner box label, in compliance with JEDEC Standard JESD97. The maximum ratings related to soldering conditions are also marked on the inner box label. ECOPACK is an ST trademark. ECOPACK specifications are available at: www.st.com

D²PAK MECHANICAL DATA

DIM.	mm.			inch		
	MIN.	TYP	MAX.	MIN.	TYP.	MAX.
A	4.4		4.6	0.173		0.181
A1	2.49		2.69	0.098		0.106
A2	0.03		0.23	0.001		0.009
B	0.7		0.93	0.027		0.036
B2	1.14		1.7	0.044		0.067
C	0.45		0.6	0.017		0.023
C2	1.23		1.36	0.048		0.053
D	8.95		9.35	0.352		0.368
D1		8			0.315	
E	10		10.4	0.393		
E1		8.5			0.334	
G	4.88		5.28	0.192		0.208
L	15		15.85	0.590		0.625
L2	1.27		1.4	0.050		0.055
L3	1.4		1.75	0.055		0.068
M	2.4		3.2	0.094		0.126
R		0.4			0.015	
V2	0º		4º			

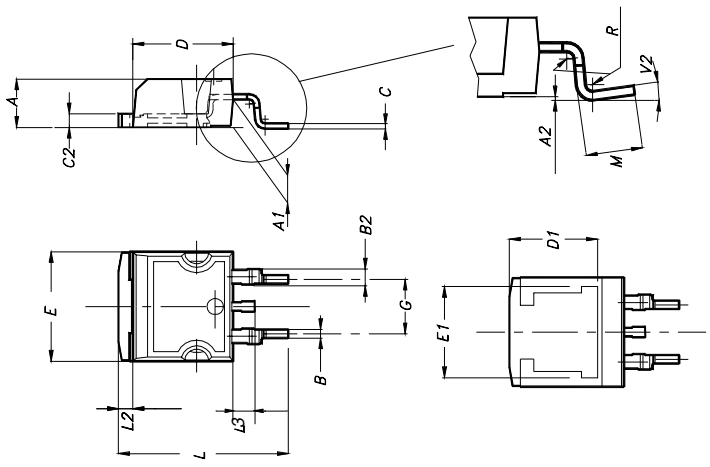

TO-262 (I^2PAK) MECHANICAL DATA

DIM.	mm.			inch		
	MIN.	TYP	MAX.	MIN.	TYP.	MAX.
A	4.40		4.60	0.173		0.181
A1	2.40		2.72	0.094		0.107
b	0.61		0.88	0.024		0.034
b1	1.14		1.70	0.044		0.066
c	0.49		0.70	0.019		0.027
c2	1.23		1.32	0.048		0.052
D	8.95		9.35	0.352		0.368
e	2.40		2.70	0.094		0.106
e1	4.95		5.15	0.194		0.202
E	10		10.40	0.393		0.410
L	13		14	0.511		0.551
L1	3.50		3.93	0.137		0.154
L2	1.27		1.40	0.050		0.055

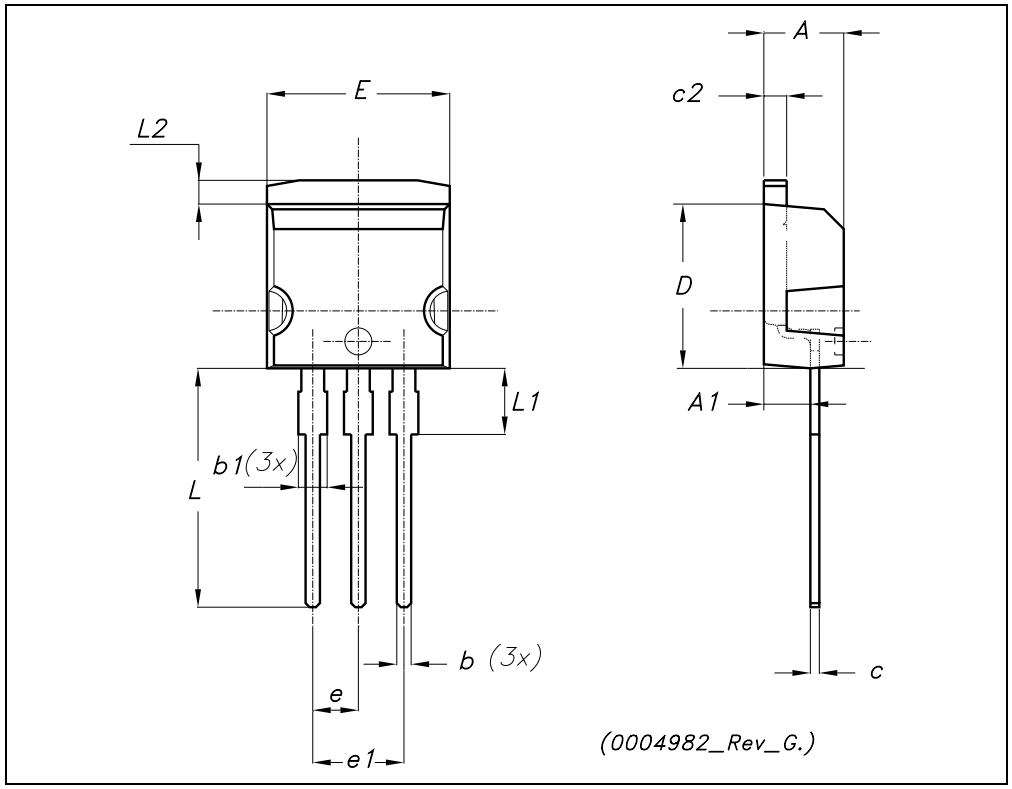

TO-220 MECHANICAL DATA

DIM.	mm.			inch		
	MIN.	TYP	MAX.	MIN.	TYP.	MAX.
A	4.40		4.60	0.173		0.181
b	0.61		0.88	0.024		0.034
b1	1.15		1.70	0.045		0.066
c	0.49		0.70	0.019		0.027
D	15.25		15.75	0.60		0.620
E	10		10.40	0.393		0.409
e	2.40		2.70	0.094		0.106
e1	4.95		5.15	0.194		0.202
F	1.23		1.32	0.048		0.052
H1	6.20		6.60	0.244		0.256
J1	2.40		2.72	0.094		0.107
L	13		14	0.511		0.551
L1	3.50		3.93	0.137		0.154
L20		16.40			0.645	
L30		28.90			1.137	
øP	3.75		3.85	0.147		0.151
Q	2.65		2.95	0.104		0.116

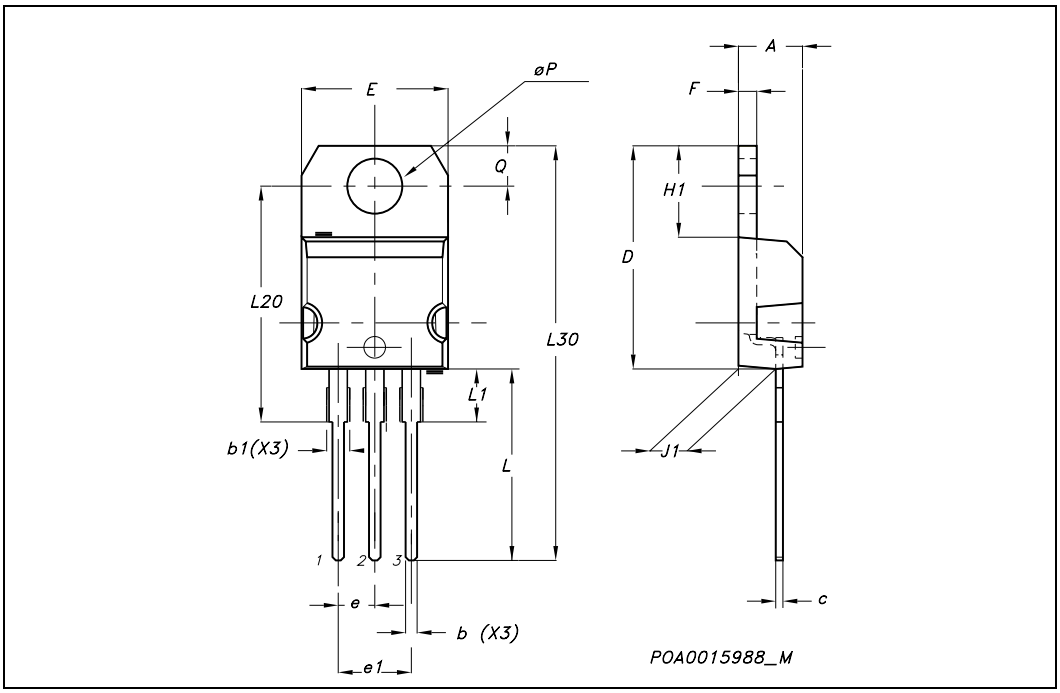

6 Packaging mechanical data

D²PAK FOOTPRINT

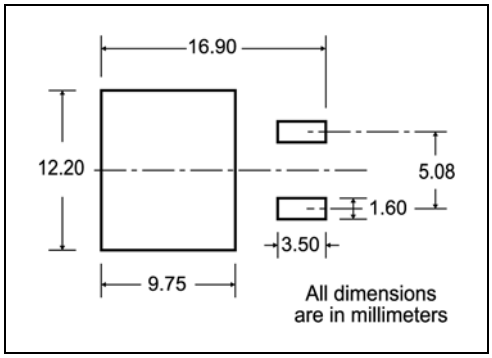

TAPE AND REEL SHIPMENT

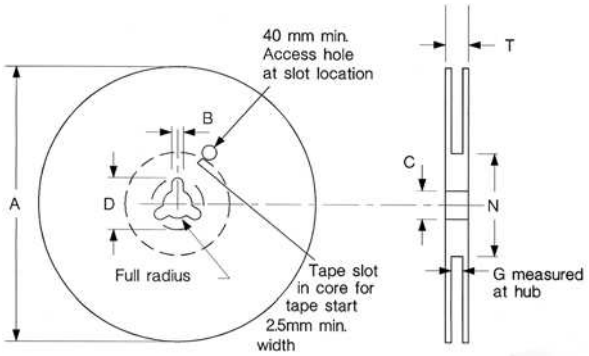

REEL MECHANICAL DATA

DIM.	mm		inch	
	MIN.	MAX.	MIN.	MAX.
A		330		12.992
B	1.5		0.059	
C	12.8	13.2	0.504	0.520
D	20.2		0795	
G	24.4	26.4	0.960	1.039
N	100		3.937	
T		30.4		1.197

BASE QTY	BULK QTY
1000	1000

TAPE MECHANICAL DATA

DIM.	mm		inch	
	MIN.	MAX.	MIN.	MAX.
A0	10.5	10.7	0.413	0.421
B0	15.7	15.9	0.618	0.626
D	1.5	1.6	0.059	0.063
D1	1.59	1.61	0.062	0.063
E	1.65	1.85	0.065	0.073
F	11.4	11.6	0.449	0.456
K0	4.8	5.0	0.189	0.197
P0	3.9	4.1	0.153	0.161
P1	11.9	12.1	0.468	0.476
P2	1.9	2.1	0.075	0.082
R	50		1.574	
T	0.25	0.35	0.0098	0.0137
W	23.7	24.3	0.933	0.956

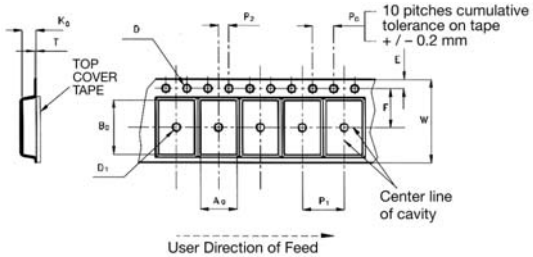

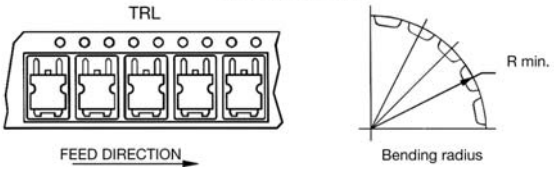

* on sales type

7 Revision history

Table 7. Revision history

Date	Revision	Changes
09-Sep-2004	2	Complete version
09-Aug-2006	3	New template, no content change

Please Read Carefully:

Information in this document is provided solely in connection with ST products. STMicroelectronics NV and its subsidiaries (“ST”) reserve the right to make changes, corrections, modifications or improvements, to this document, and the products and services described herein at any time, without notice.

All ST products are sold pursuant to ST’s terms and conditions of sale.

Purchasers are solely responsible for the choice, selection and use of the ST products and services described herein, and ST assumes no liability whatsoever relating to the choice, selection or use of the ST products and services described herein.

No license, express or implied, by estoppel or otherwise, to any intellectual property rights is granted under this document. If any part of this document refers to any third party products or services it shall not be deemed a license grant by ST for the use of such third party products or services, or any intellectual property contained therein or considered as a warranty covering the use in any manner whatsoever of such third party products or services or any intellectual property contained therein.

UNLESS OTHERWISE SET FORTH IN ST’S TERMS AND CONDITIONS OF SALE ST DISCLAIMS ANY EXPRESS OR IMPLIED WARRANTY WITH RESPECT TO THE USE AND/OR SALE OF ST PRODUCTS INCLUDING WITHOUT LIMITATION IMPLIED WARRANTIES OF MERCHANTABILITY, FITNESS FOR A PARTICULAR PURPOSE (AND THEIR EQUIVALENTS UNDER THE LAWS OF ANY JURISDICTION), OR INFRINGEMENT OF ANY PATENT, COPYRIGHT OR OTHER INTELLECTUAL PROPERTY RIGHT.

UNLESS EXPRESSLY APPROVED IN WRITING BY AN AUTHORIZED ST REPRESENTATIVE, ST PRODUCTS ARE NOT RECOMMENDED, AUTHORIZED OR WARRANTED FOR USE IN MILITARY, AIR CRAFT, SPACE, LIFE SAVING, OR LIFE SUSTAINING APPLICATIONS, NOR IN PRODUCTS OR SYSTEMS WHERE FAILURE OR MALFUNCTION MAY RESULT IN PERSONAL INJURY, DEATH, OR SEVERE PROPERTY OR ENVIRONMENTAL DAMAGE. ST PRODUCTS WHICH ARE NOT SPECIFIED AS "AUTOMOTIVE GRADE" MAY ONLY BE USED IN AUTOMOTIVE APPLICATIONS AT USER’S OWN RISK.

Resale of ST products with provisions different from the statements and/or technical features set forth in this document shall immediately void any warranty granted by ST for the ST product or service described herein and shall not create or extend in any manner whatsoever, any liability of ST.

ST and the ST logo are trademarks or registered trademarks of ST in various countries.

Information in this document supersedes and replaces all information previously supplied.

The ST logo is a registered trademark of STMicroelectronics. All other names are the property of their respective owners.

© 2007 STMicroelectronics - All rights reserved

STMicroelectronics group of companies

Australia - Belgium - Brazil - Canada - China - Czech Republic - Finland - France - Germany - Hong Kong - India - Israel - Italy - Japan - Malaysia - Malta - Morocco - Singapore - Spain - Sweden - Switzerland - United Kingdom - United States of America

www.st.com