STB60NH02L

N-CHANNEL 24V - 0.0085 Ω - 60A D²PAK
STripFET™ III POWER MOSFET

TYPE	V_{DSS}	$R_{DS(on)}$	I_D
STB60NH02L	24 V	< 0.0105 Ω	60 A

- TYPICAL R_{DS}(on) = 0.0085 Ω @ 10 V
- TYPICAL R_{DS}(on) = 0.012 Ω @ 5 V
- $R_{DS(ON)}$ * Qg INDUSTRY's BENCHMARK
- CONDUCTION LOSSES REDUCED
- SWITCHING LOSSES REDUCED
- LOW THRESHOLD DEVICE
- SURFACE-MOUNTING D²PAK (TO-263) POWER PACKAGE IN TUBE (NO SUFFIX) OR IN TAPE & REEL (SUFFIX "T4")

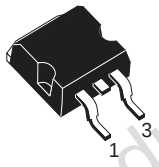

D²PAK
TO-263
(Suffix "T4")

DESCRIPTION
The STB60NH02L utilizes the latest advanced design rules of ST's proprietary STripFET™ technology. This is suitable fot the most demanding DC-DC converter application where high efficiency is to be achieved.

APPLICATIONS
- SPECIFICALLY DESIGNED AND OPTIMISED FOR HIGH EFFICIENCY DC/DC CONVERTES

INTERNAL SCHEMATIC DIAGRAM

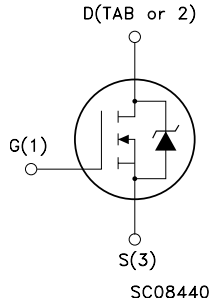

Obsolete Product(s) - Obsolete Product(s)

Ordering Information

SALES TYPE	MARKING	PACKAGE	PACKAGING
STB60NH02LT4	B60NH02L	TO-263	TAPE & REEL

ABSOLUTE MAXIMUM RATINGS

Symbol	Parameter	Value	Unit
$V_{spike(1)}$	Drain-source Voltage Rating	30	V
V_{DS}	Drain-source Voltage (V_{GS} = 0)	24	V
V_{DGR}	Drain-gate Voltage (R_{GS} = 20 kΩ)	24	V
V_{GS}	Gate- source Voltage	± 20	V
I_D	Drain Current (continuous) at T_C = 25°C	60	A
I_D	Drain Current (continuous) at T_C = 100°C	43	A
I_{DM}(2)	Drain Current (pulsed)	240	A
P_{tot}	Total Dissipation at T_C = 25°C	70	W
	Derating Factor	0.47	W/°C
E_{AS} (3)	Single Pulse Avalanche Energy	280	mJ
T_{stg}	Storage Temperature	-55 to 175	°C
T_j	Max. Operating Junction Temperature		

THERMAL DATA

$R_{thj\text{-}case}$	Thermal Resistance Junction-case	Max	2.14	°C/W
$R_{thj\text{-}amb}$	Thermal Resistance Junction-ambient	Max	62.5	°C/W
T_l	Maximum Lead Temperature For Soldering Purpose		300	°C

ELECTRICAL CHARACTERISTICS (T_{CASE} = 25 °C UNLESS OTHERWISE SPECIFIED)

OFF

Symbol	Parameter	Test Conditions	Min.	Typ.	Max.	Unit
$V_{(BR)DSS}$	Drain-source Breakdown Voltage	I_D = 25 mA, V_{GS} = 0	24			V
I_{DSS}	Zero Gate Voltage Drain Current (V_{GS} = 0)	V_{DS} = 20 V V_{DS} = 20 V T_C = 125°C			1 10	µA µA
I_{GSS}	Gate-body Leakage Current (V_{DS} = 0)	V_{GS} = ± 20V			±100	nA

ON (4)

Symbol	Parameter	Test Conditions	Min.	Typ.	Max.	Unit
$V_{GS(th)}$	Gate Threshold Voltage	V_{DS} = V_{GS} I_D = 250 µA	1	1.8	2.5	V
$R_{DS(on)}$	Static Drain-source On Resistance	V_{GS} = 10 V I_D = 30 A V_{GS} = 5 V I_D = 15 A		0.0085 0.012	0.0105 0.020	Ω Ω

DYNAMIC

Symbol	Parameter	Test Conditions	Min.	Typ.	Max.	Unit
g_{fs} (4)	Forward Transconductance	V_{DS} = 15 V I_D = 25 A		27		S
C_{iss} C_{oss} C_{rss}	Input Capacitance Output Capacitance Reverse Transfer Capacitance	V_{DS} = 15V f = 1 MHz V_{GS} = 0		1400 400 55		pF pF pF
R_G	Gate Input Resistance	f = 1 MHz Gate DC Bias = 0 Test Signal Level = 20 mV Open Drain		1		Ω

Obsolete Product(s) - Obsolete Product(s)

ELECTRICAL CHARACTERISTICS (continued)

SWITCHING ON

Symbol	Parameter	Test Conditions	Min.	Typ.	Max.	Unit
$t_{d(on)}$ t_r	Turn-on Delay Time Rise Time	V_{DD} = 10 V I_D = 30 A R_G = 4.7 Ω V_{GS} = 10 V (Resistive Load, Figure 3)		10 130		ns ns
Q_g Q_{gs} Q_{gd}	Total Gate Charge Gate-Source Charge Gate-Drain Charge	V_{DD}= 10 V I_D= 60 A V_{GS}= 10 V		24 5 3.4	32	nC nC nC
Q_{oss}(5)	Output Charge	V_{DS}= 16 V V_{GS}= 0 V		9.4		nC

SWITCHING OFF

Symbol	Parameter	Test Conditions	Min.	Typ.	Max.	Unit
$t_{d(off)}$ t_f	Turn-off Delay Time Fall Time	V_{DD} = 10 V I_D = 30 A R_G = 4.7Ω, V_{GS} = 10 V (Resistive Load, Figure 3)		27 16	 21.6	ns ns

SOURCE DRAIN DIODE

Symbol	Parameter	Test Conditions	Min.	Typ.	Max.	Unit
I_{SD} I_{SDM}	Source-drain Current Source-drain Current (pulsed)				60 240	A A
V_{SD} (4)	Forward On Voltage	I_{SD} = 30 A V_{GS} = 0			1.3	V
t_{rr} Q_{rr} I_{RRM}	Reverse Recovery Time Reverse Recovery Charge Reverse Recovery Current	I_{SD} = 60 A di/dt = 100A/µs V_{DD} = 18 V T_j = 150°C (see test circuit, Figure 5)		36 36 2	48 48	ns nC A

(1) Garanted when external Rg=4.7 Ω and $T_j < T_{jmax}$.
(2) Pulse width limited by safe operating area
(3) Starting T_j = 25 °C, I_D = 25A, V_{DD} = 15V
(4) Pulsed: Pulse duration = 300 µs, duty cycle 1.5 %.
(5) $Q_{oss} = C_{oss}*\Delta V_{in}$, $C_{oss} = C_{gd} + C_{ds}$. See Appendix A

Safe Operating Area

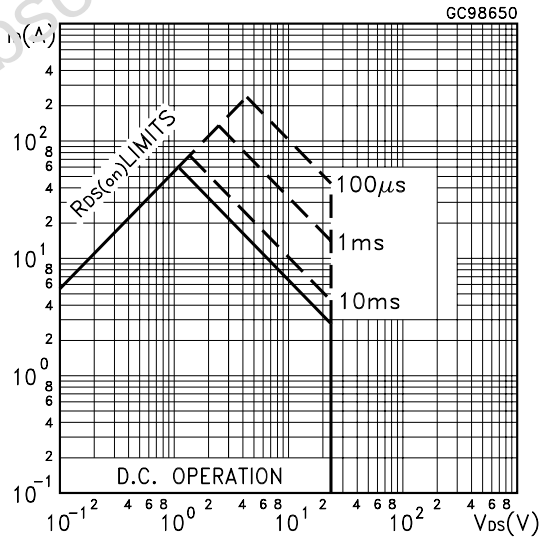

Thermal Impedance

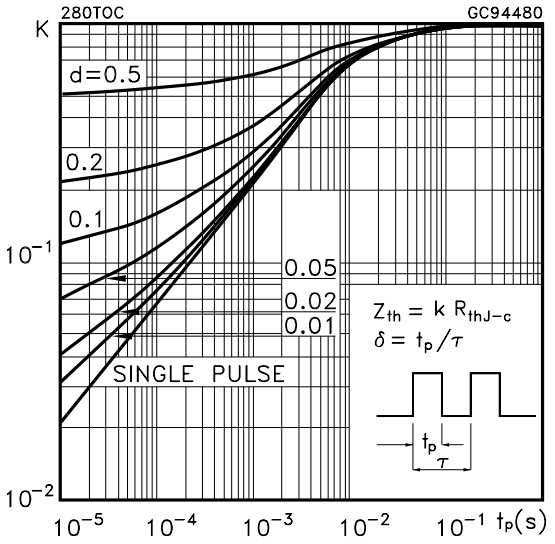

Obsolete Product(s) - Obsolete Product(s)

Output Characteristics

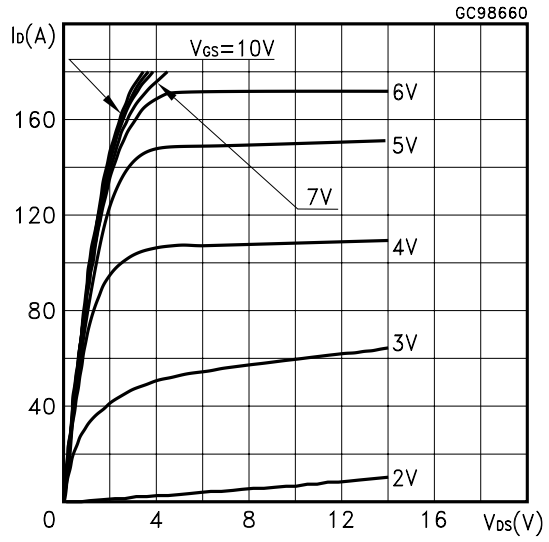

Transfer Characteristics

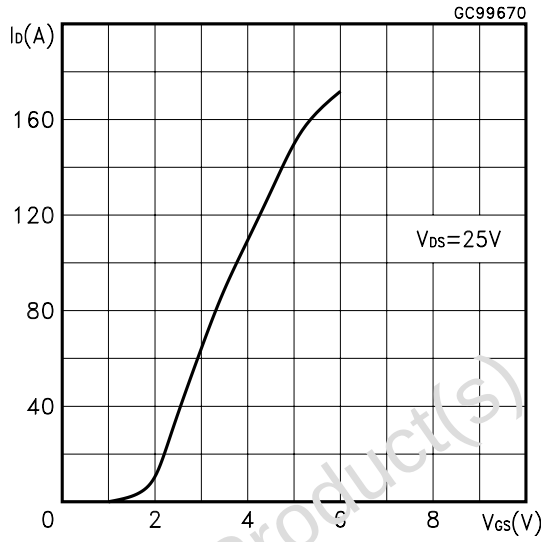

Transconductance

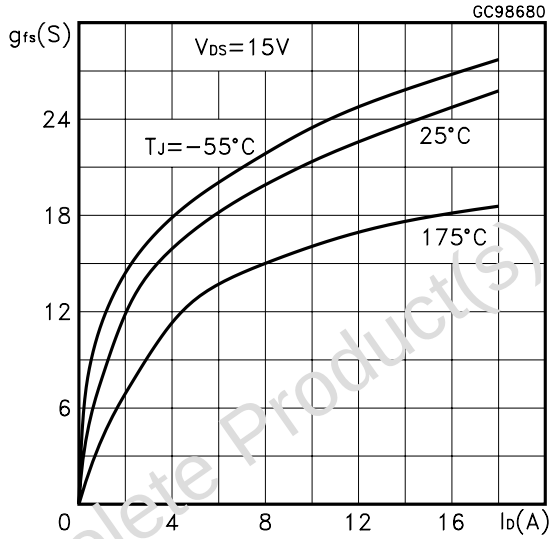

Static Drain-source On Resistance

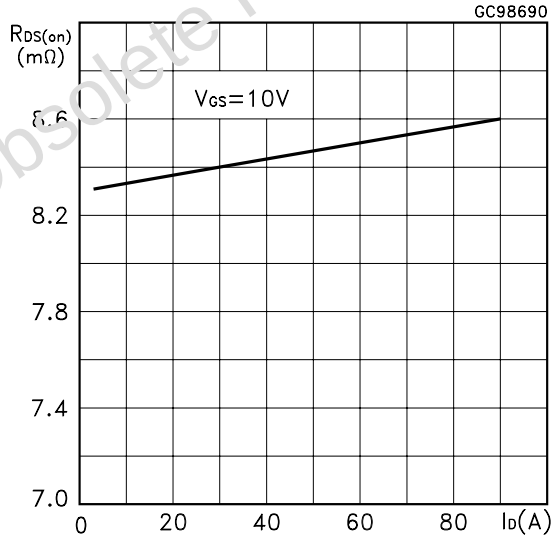

Gate Charge vs Gate-source Voltage

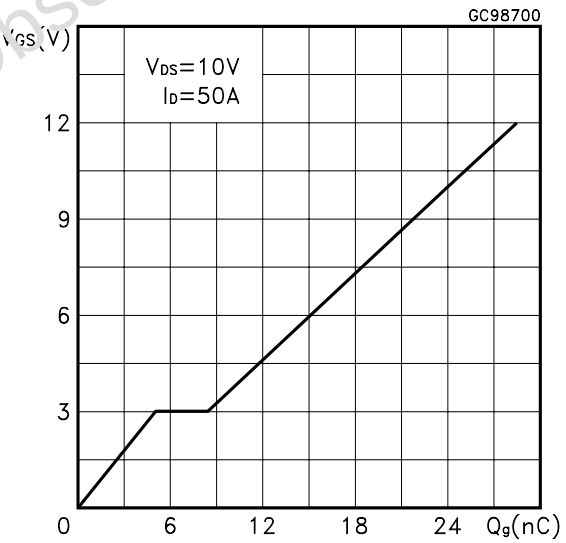

Capacitance Variations

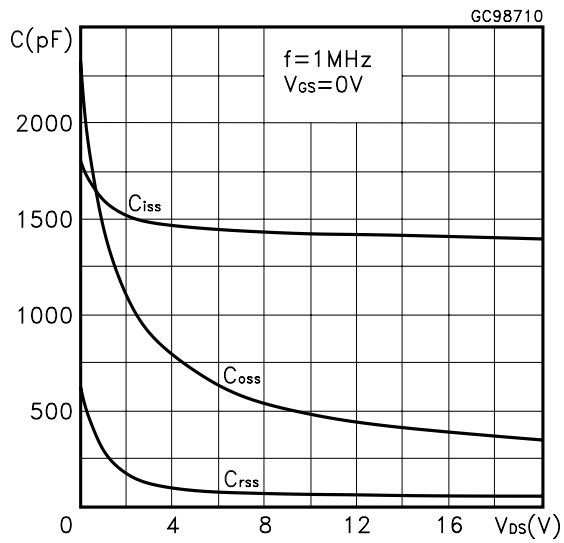

Obsolete Product(s) - Obsolete Product(s)

Normalized Gate Threshold Voltage vs Temperature

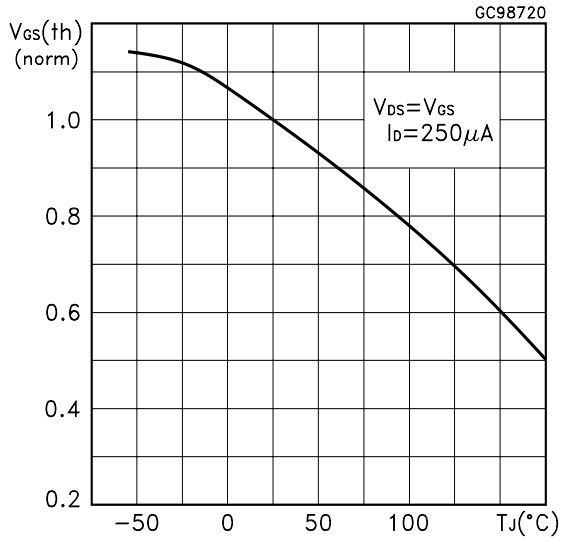

Normalized on Resistance vs Temperature

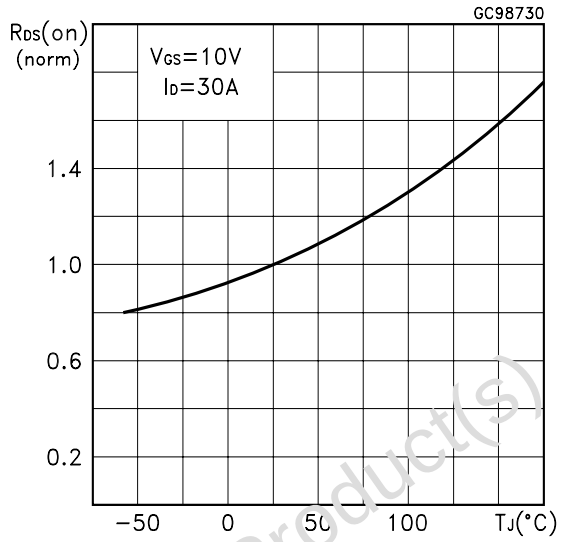

Source-drain Diode Forward Characteristics

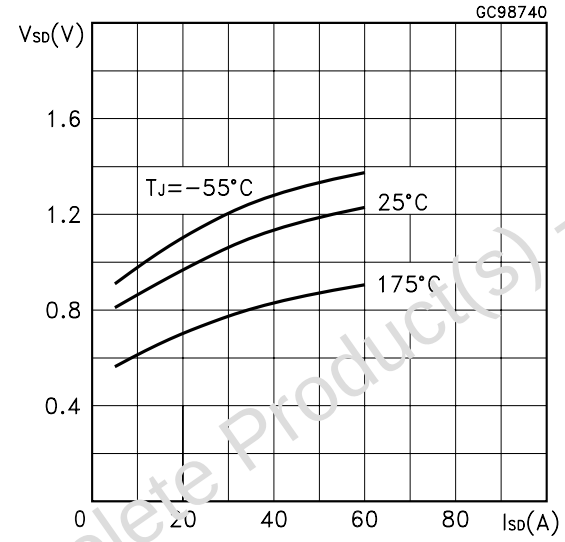

Normalized Breakdown Voltage vs Temperature

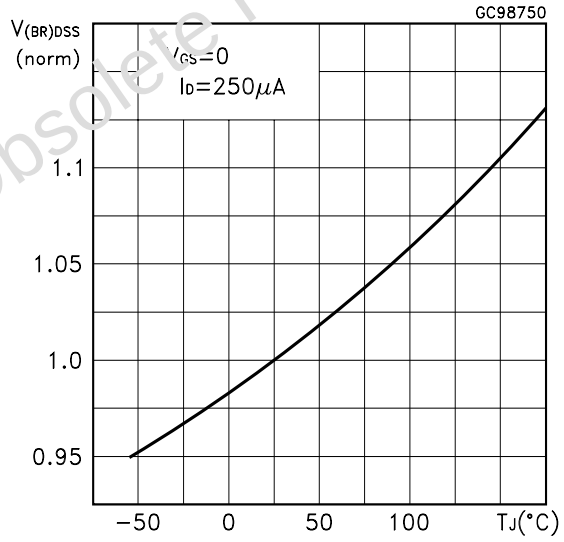

Obsolete Product(s) - Obsolete Product(s)

Fig. 1: Unclamped Inductive Load Test Circuit

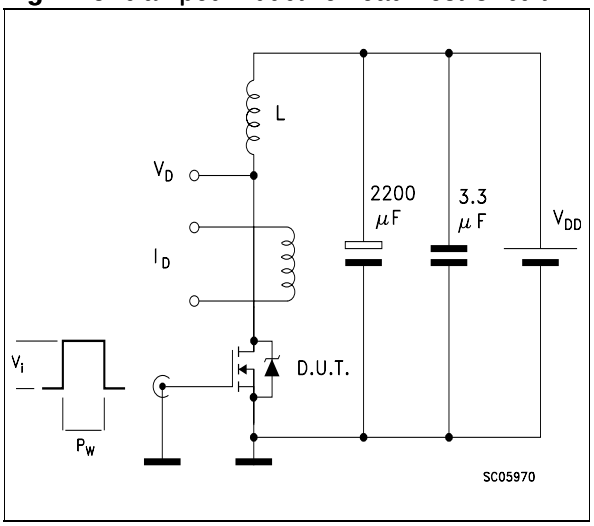

Fig. 2: Unclamped Inductive Waveform

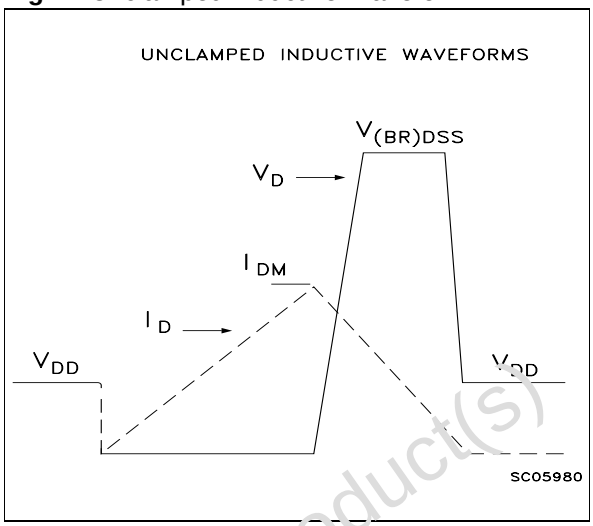

Fig. 3: Switching Times Test Circuits For Resistive Load

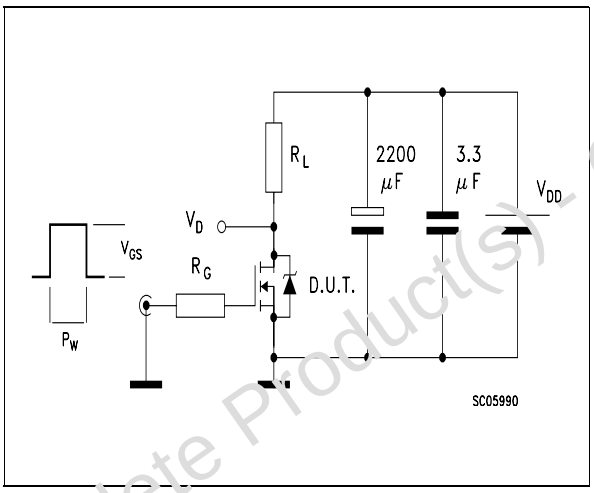

Fig. 4: Gate Charge test Circuit

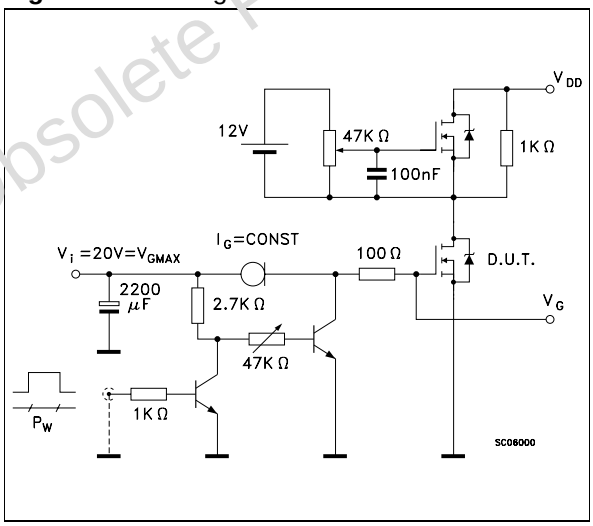

Fig. 5: Test Circuit For Inductive Load Switching And Diode Recovery Times

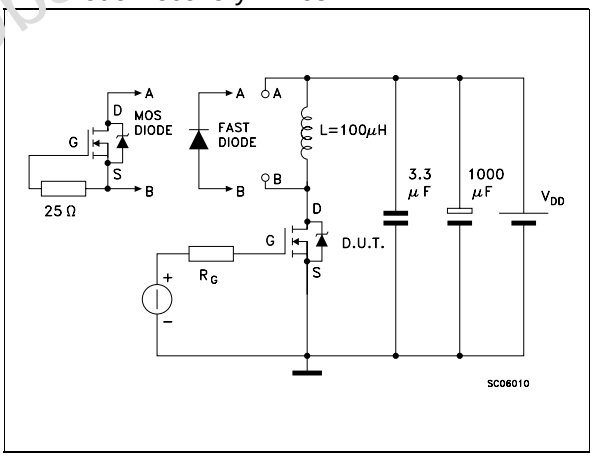

Obsolete Product(s) - Obsolete Product(s)

D²PAK MECHANICAL DATA

DIM.	mm.			inch.		
	MIN.	TYP.	MAX.	MIN.	TYP.	TYP.
A	4.4		4.6	0.173		0.181
A1	2.49		2.69	0.098		0.106
A2	0.03		0.23	0.001		0.009
B	0.7		0.93	0.028		0.037
B2	1.14		1.7	0.045		0.067
C	0.45		0.6	0.018		0.024
C2	1.21		1.36	0.048		0.054
D	8.95		9.35	0.352		0.368
D1		8			0.315	
E	10		10.4	0.394		0.409
E1		8.5			0.334	
G	4.88		5.28	0.192		0.208
L	15		15.85	0.591		0.624
L2	1.27		1.4	0.050		0.055
L3	1.4		1.75	0.055		0.069
M	2.4		3.2	0.094		0.126
R		0.4			0.015	
V2	0°		4°	0°		4°

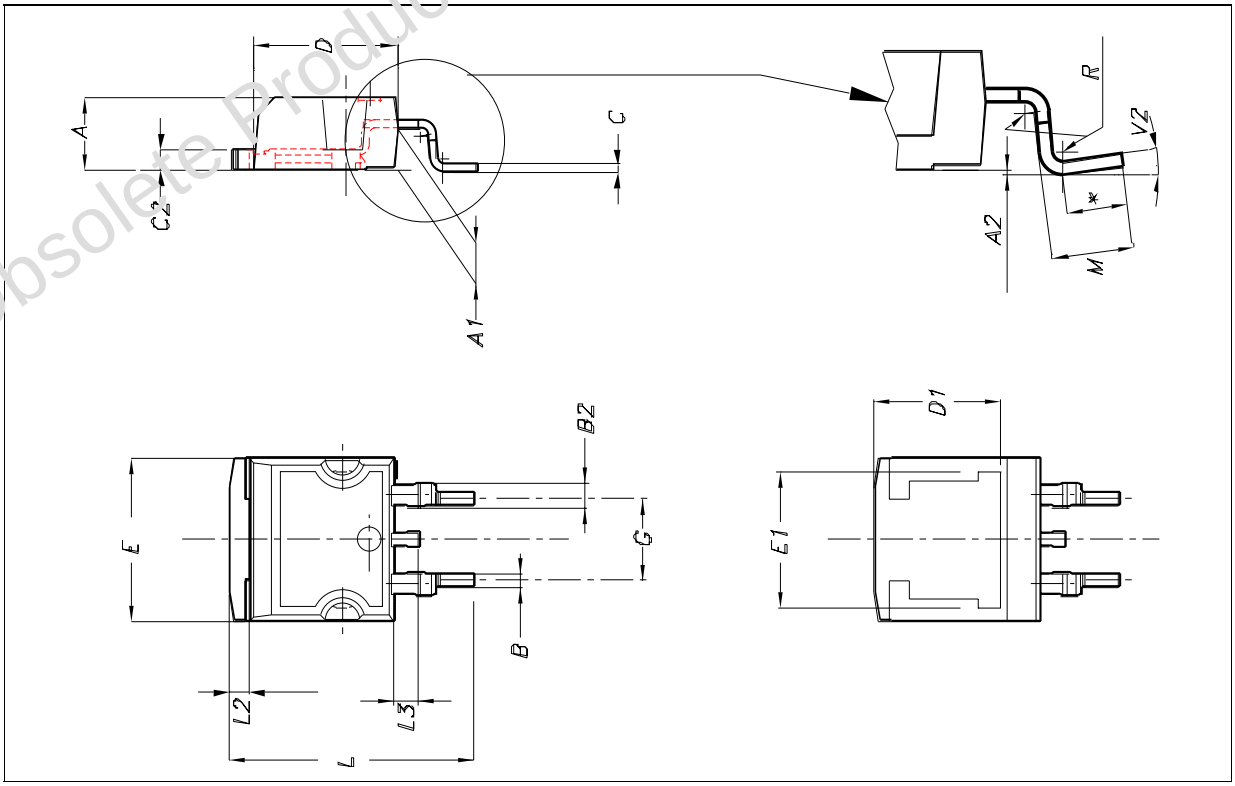

Obsolete Product(s) - Obsolete Product(s)

D²PAK FOOTPRINT

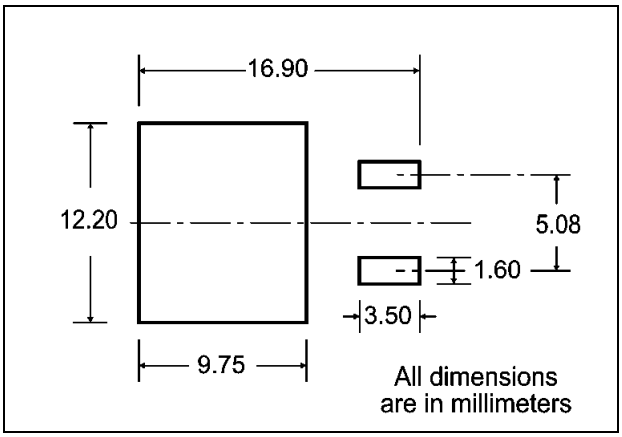

TUBE SHIPMENT (no suffix)*

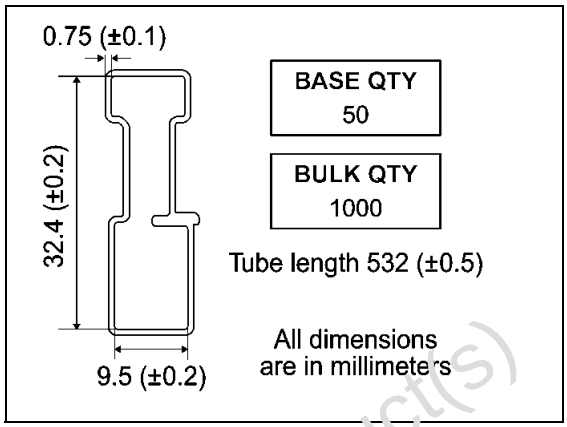

TAPE AND REEL SHIPMENT (suffix "T4")*

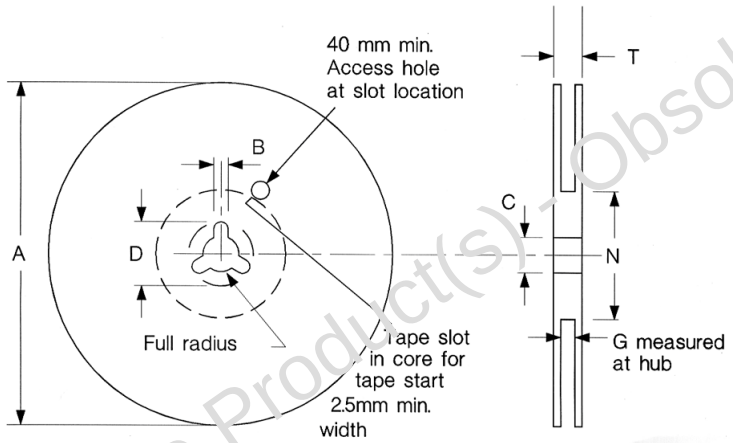

REEL MECHANICAL DATA

DIM.	mm		inch	
	MIN.	MAX.	MIN.	MAX.
A		330		12.992
B	1.5		0.059	
C	12.8	13.2	0.504	0.520
D	20.2		0.795	
G	24.4	26.4	0.960	1.039
N	100		3.937	
T		30.4		1.197

BASE QTY	BULK QTY
1000	1000

TAPE MECHANICAL DATA

DIM.	mm		inch	
	MIN.	MAX.	MIN.	MAX.
A0	10.5	10.7	0.413	0.421
B0	15.7	15.9	0.618	0.626
D	1.5	1.6	0.059	0.063
D1	1.59	1.61	0.062	0.063
E	1.65	1.85	0.065	0.073
F	11.4	11.6	0.449	0.456
K0	4.8	5.0	0.189	0.197
P0	3.9	4.1	0.153	0.161
P1	11.9	12.1	0.468	0.476
P2	1.9	2.1	0075	0.082
R	50		1.574	
T	0.25	0.35	.0.0098	0.0137
W	23.7	24.3	0.933	0.956

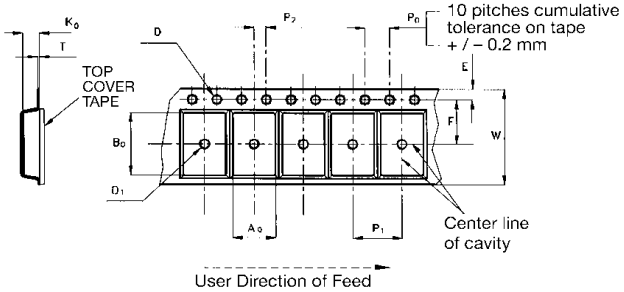

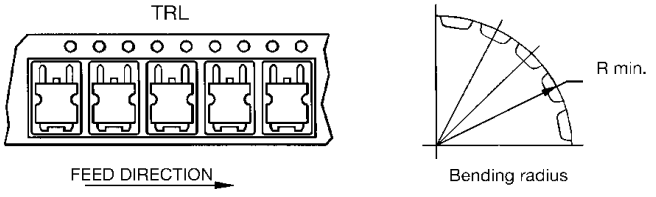

Obsolete Product(s) - Obsolete Product(s)

* on sales type

APPENDIX A
Buck Converter: Power Losses Estimation

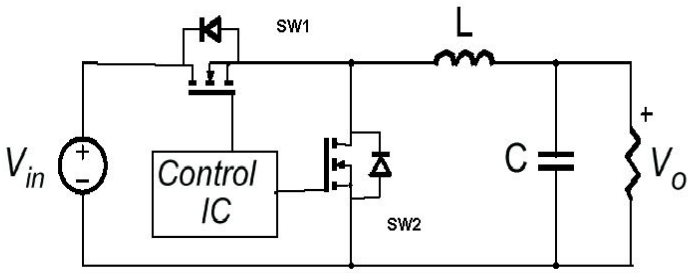

The power losses associated with the FETs in a Synchronous Buck converter can be estimated using the equations shown in the table below. The formulas give a good approximation, for the sake of performance comparison, of how different pairs of devices affect the converter efficiency. However a very important parameter, the working temperature, is not considered. The real device behavior is really dependent on how the heat generated inside the devices is removed to allow for a safer working junction temperature.

The low side (**SW2**) device requires:

- Very low $R_{DS(on)}$ to reduce conduction losses
- Small Q_{gls} to reduce the gate charge losses
- Small C_{oss} to reduce losses due to output capacitance
- Small Q_{rr} to reduce losses on SW_1 during its turn-on
- The C_{gd}/C_{gs} ratio lower than V_{th}/V_{gg} ratio especially with low drain to source voltage to avoid the cross conduction phenomenon;

The high side (**SW1**) device requires:

- Small R_g and L_s to allow higher gate current peak and to limit the voltage feedback on the gate
- Small Q_g to have a faster commutation and to reduce gate charge losses
- Low $R_{DS(on)}$ to reduce the conduction losses.

Obsolete Product(s) - Obsolete Product(s)

		High Side Switch (SW1)	Low Side Switch (SW2)
$P_{conduction}$		$R_{DS(on)SW1} * I_L^2 * \delta$	$R_{DS(on)SW2} * I_L^2 * (1-\delta)$
$P_{switching}$		$V_{in} * (Q_{gsth(SW1)} + Q_{gd(SW1)}) * f * \frac{I_L}{I_g}$	Zero Voltage Switching
P_{diode}	Recovery	Not Applicable	[1] $V_{in} * Q_{rr(SW2)} * f$
	Conduction	Not Applicable	$V_{f(SW2)} * I_L * t_{deadtime} * f$
$P_{gate(Q_G)}$		$Q_{g(SW1)} * V_{gg} * f$	$Q_{gls(SW1)} * V_{gg} * f$
P_{Qoss}		$\frac{V_{in} * Q_{oss(SW1)} * f}{2}$	$\frac{V_{in} * Q_{oss(SW2)} * f}{2}$

Parameter	Meaning
δ	Duty-cycle
Q_{gsth}	Post threshold gate charge
Q_{gls}	Third quadrant gate charge
Pconduction	On state losses
Pswitching	On-off transition losses
Pdiode	Conduction and reverse recovery diode losses
Pgate	Gate drive losses
P_{Qoss}	Output capacitance losses

[1] Dissipated by SW1 during turn-on

Obsolete Product(s) - Obsolete Product(s)

Obsolete Product(s) - Obsolete Product(s)

Information furnished is believed to be accurate and reliable. However, STMicroelectronics assumes no responsibility for the consequences of use of such information nor for any infringement of patents or other rights of third parties which may result from its use. No license is granted by implication or otherwise under any patent or patent rights of STMicroelectronics. Specifications mentioned in this publication are subject to change without notice. This publication supersedes and replaces all information previously supplied. STMicroelectronics products are not authorized for use as critical components in life support devices or systems without express written approval of STMicroelectronics.

The ST logo is registered trademark of STMicroelectronics
All other names are the property of their respective owners.

© 2004 STMicroelectronics - All Rights Reserved

STMicroelectronics GROUP OF COMPANIES
Australia - Belgium - Brazil - Canada - China - Czech Republic - Finland - France - Germany - Hong Kong - India - Israel - Italy - Japan - Malaysia - Malta - Morocco -Singapore - Spain - Sweden - Switzerland - United Kingdom - United States.
www.st.com