STGB20NB41LZ

N-CHANNEL CLAMPED 20A - D²PAK
INTERNALLY CLAMPED PowerMESH™ IGBT

TYPE	V_{CES}	$V_{CE(sat)}$	I_C
STGB20NB41LZ	CLAMPED	< 2.0 V	20 A

- POLYSILICON GATE VOLTAGE DRIVEN
- LOW THRESHOLD VOLTAGE
- LOW ON-VOLTAGE DROP
- LOW GATE CHARGE
- HIGH CURRENT CAPABILITY
- HIGH VOLTAGE CLAMPING FEATURE

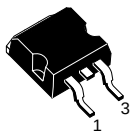

D²PAK

INTERNAL SCHEMATIC DIAGRAM

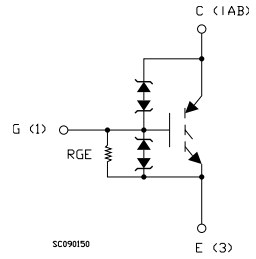

DESCRIPTION

Using the latest high voltage technology based on a patented strip layout, STMicroelectronics has designed an advanced family of IGBTs, the PowerMESH™ IGBTs, with outstanding performances. The built in collector-gate zener exhibits a very precise active clamping while the gate-emitter zener supplies an ESD protection.

APPLICATIONS

- AUTOMOTIVE IGNITION

Target specification

ORDER CODE

PART NUMBER	MARKING	PACKAGE	PACKAGING
STGB20NB41LZT4	GB20NB41LZ	D^2PAK	TAPE & REEL

ABSOLUTE MAXIMUM RATINGS

Symbol	Parameter	Value	Unit
V_{CES}	Collector-Emitter Voltage (V_{GS} = 0)	CLAMPED	V
V_{ECR}	Emitter-Collector Voltage	20	V
V_{GE}	Gate-Emitter Voltage	CLAMPED	V
I_C	Collector Current (continuous) at T_C = 25°C	40	A
I_C	Collector Current (continuous) at T_C = 100°C	20	A
I_{CM} (▪)	Collector Current (pulsed)	80	A
Eas	Single Pulse Energy Tc = 25°C	700	mJ
P_{TOT}	Total Dissipation at T_C = 25°C	200	W
	Derating Factor	1.33	W/°C
E_{SD}	ESD (Human Body Model)	8	KV
T_{stg}	Storage Temperature	– 55 to 175	°C
T_j	Operating Junction Temperature		

(▪) Pulse width limited by safe operating area

THERMAL DATA

Rthj-case	Thermal Resistance Junction-case Max	0.75	°C/W
Rthj-amb	Thermal Resistance Junction-ambient Max	62.5	°C/W

ELECTRICAL CHARACTERISTICS (T_{CASE} = 25 °C UNLESS OTHERWISE SPECIFIED)

OFF

Symbol	Parameter	Test Conditions	Min.	Typ.	Max.	Unit
$BV_{(CES)}$	Clamped Voltage	I_C= 2 mA, V_{GE}= 0, Tc= - 40°C ÷ 150°C	382	412	442	V
$BV_{(ECR)}$	Emitter Collector Break-down Voltage	I_C= 75 mA, Tc= 25°C	20	28		V
BV_{GE}	Gate Emitter Break-down Voltage	I_G= ± 2 mA	12	14	16	V
I_{CES}	Collector cut-off Current (V_{GE} = 0)	V_{CE}= 15 V, V_{GE}= 0 ,T_C= 150 °C			10	µA
		V_{CE}=200 V, V_{GE}= 0 ,T_C= 150°C			100	µA
I_{GES}	Gate-Emitter Leakage Current (V_{CE} = 0)	V_{GE}= ± 10V , V_{CE}= 0	± 300	± 660	± 1000	µA
R_{GE}	Gate Emitter Resistance		10	15	30	KΩ

ON (1)

Symbol	Parameter	Test Conditions	Min.	Typ.	Max.	Unit
$V_{GE(th)}$	Gate Threshold Voltage	V_{CE}= V_{GE}, I_C= 250µA, Tc=25°C	1		2.4	V
$V_{CE(SAT)}$	Collector-Emitter Saturation Voltage	V_{GE}= 4.5V, I_C= 10 A, Tc= 25°C		1.1	1.8	V
		V_{GE}= 4.5V, I_C= 20 A, Tc= 25°C		1.3	2.0	V

Target specification

DYNAMIC

Symbol	Parameter	Test Conditions	Min.	Typ.	Max.	Unit
g_{fs}	Forward Transconductance	V_{CE} = 25 V , I_C =20 A		35		S
C_{ies}	Input Capacitance	V_{CE} = 25V, f = 1 MHz, V_{GE} = 0		2300		pF
C_{oes}	Output Capacitance			160		pF
C_{res}	Reverse Transfer Capacitance			25		pF
Q_g	Gate Charge	V_{CE} = 320V, I_C = 20 A, V_{GE} = 5V		46		nC

FUNCTIONAL CHARACTERISTICS

Symbol	Parameter	Test Conditions	Min.	Typ.	Max.	Unit
II	Latching Current	V_{Clamp} = 320 V, T_C = 125 °C R_{GOFF} = 1KΩ , V_{GE} = 10 V		40		A
U.I.S.	Functional Test Open Secondary Coil	R_{GOFF} =1KΩ , L = 1.6mH, Tc=125°C	20			A

SWITCHING ON

Symbol	Parameter	Test Conditions	Min.	Typ.	Max.	Unit
$t_{d(on)}$ t_r	Turn-on Delay Time Rise Time	V_{CC} = 320 V, I_C = 20 A R_G = 1KΩ , V_{GE} = 5 V		1 0.22		µs µs
$(di/dt)_{on}$	Turn-on Current Slope	V_{CC}= 320 V, I_C = 20 A R_G=1KΩ, V_{GE} = 5 V		140		A/µs
Eon	Turn-on Switching Losses	V_{CC}= 320 V, I_C = 20 A, Tc=25°C		5		mJ
		R_G=1KΩ, V_{GE} = 5 V, Tc=150°C		5.1		mJ

SWITCHING OFF

Symbol	Parameter	Test Conditions	Min.	Typ.	Max.	Unit
t_c	Cross-over Time	V_{cc} = 320 V, I_C = 20 A, R_{GE} = 1K Ω , V_{GE} = 5 V		4.4		µs
$t_r(V_{off})$	Off Voltage Rise Time			2.5		µs
$t_{d(off)}$	Delay Time			12.1		µs
t_f	Fall Time			1.6		µs
E_{off}(**)	Turn-off Switching Loss			12.9		mJ
t_c	Cross-over Time	V_{cc} = 320 V, I_C = 20 A, R_{GE} = 1 KΩ , V_{GE} = 5 V Tj = 125 °C		6		µs
$t_r(V_{off})$	Off Voltage Rise Time			3.16		µs
$t_{d(off)}$	Delay Time			13.4		µs
t_f	Fall Time			2.7		µs
E_{off}(**)	Turn-off Switching Loss			18.4		mJ

(1)Pulse width limited by max. junction temperature.
(**)Losses Include Also the Tail

Target specification

Target specification

Output Characteristics

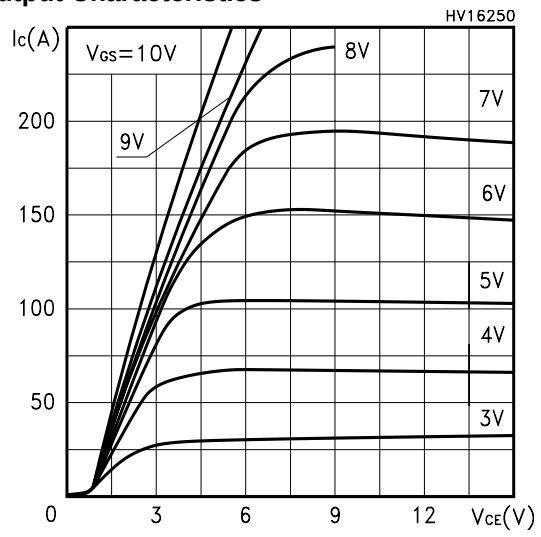

Transfer Characteristics

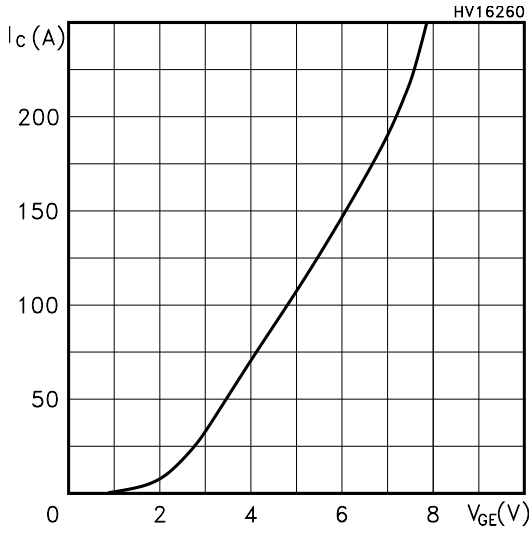

Normalized Gate Threshold Voltage vs Temp.

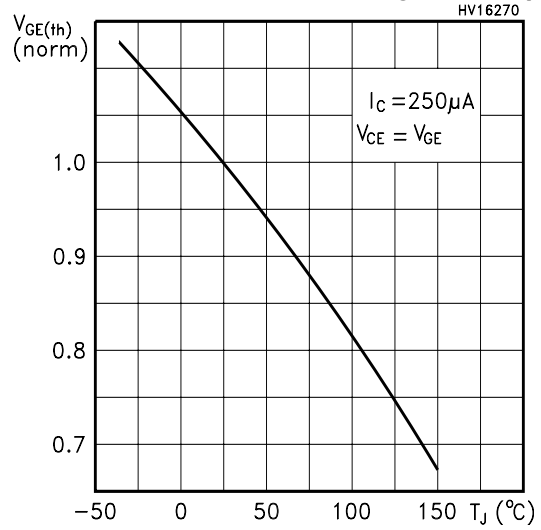

Transconductance

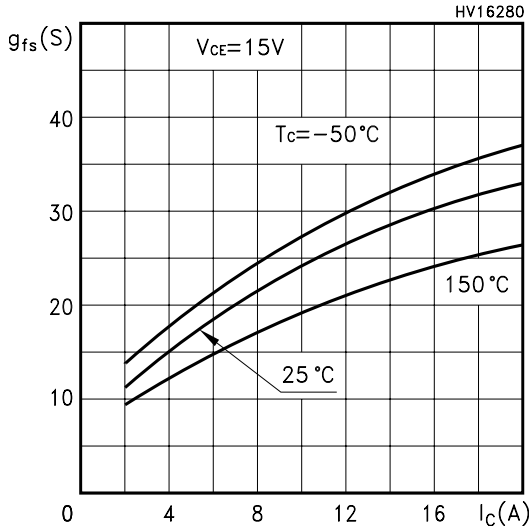

Normalized Collector-Emitter On Voltage vs Temperature

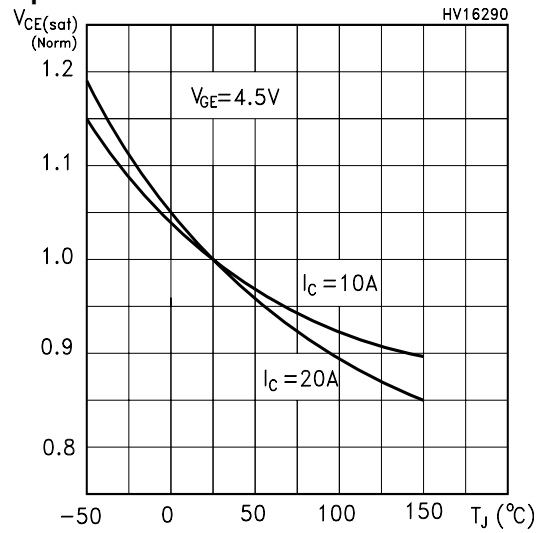

Normalized Collector-Emitter On Voltage vs Gate-Emitter Voltage

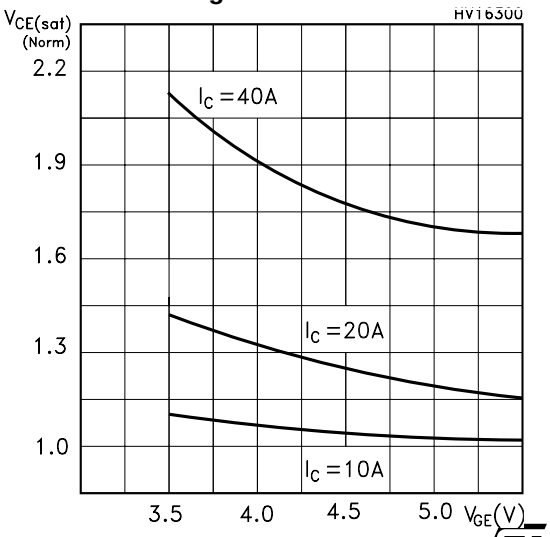

Target specification

Capacitance Variations

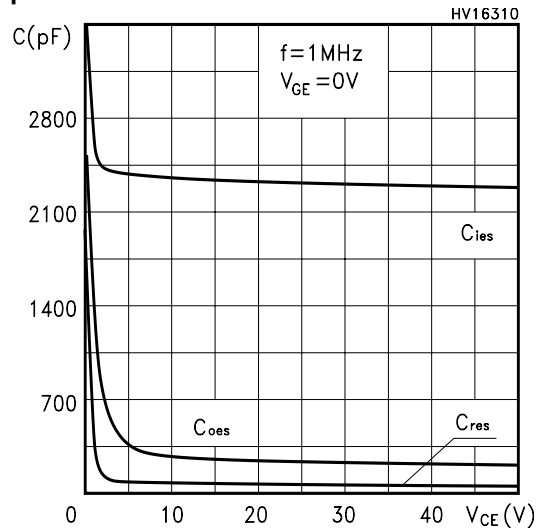

Gate Charge vs Gate-Emitter Voltage

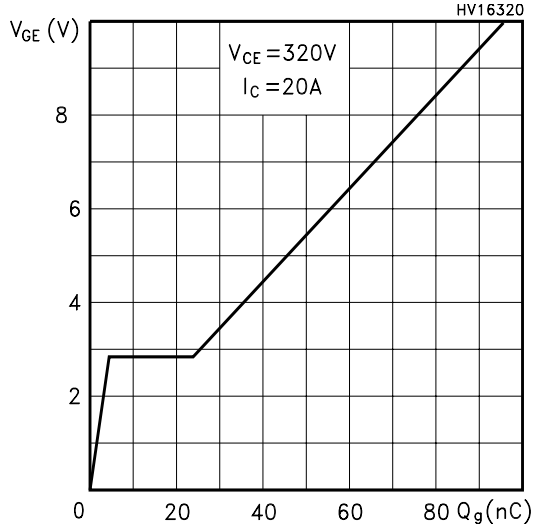

Off Losses vs Gate Resistance

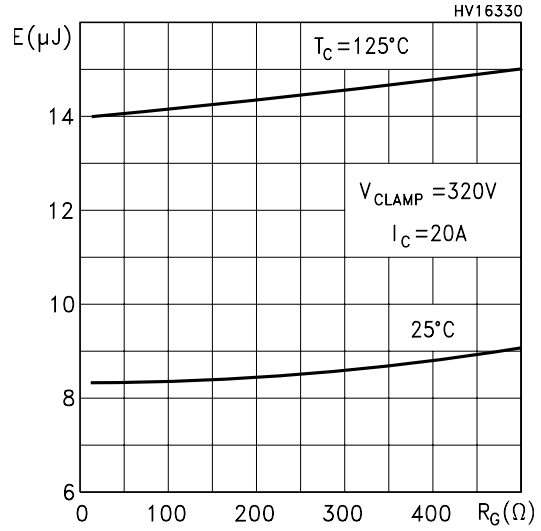

Off Losses vs Collector Current

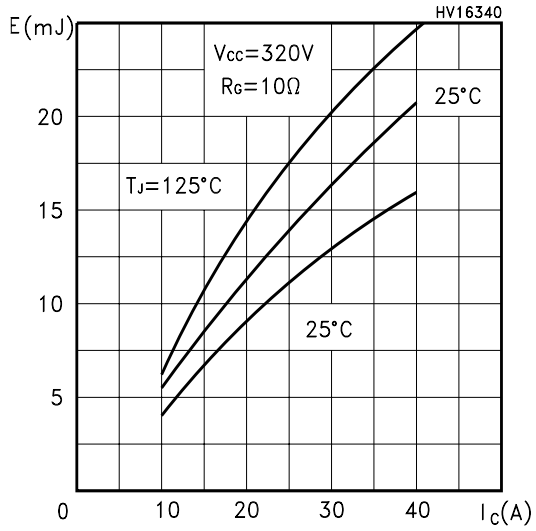

Normalized Break-down Voltage vs Temp.

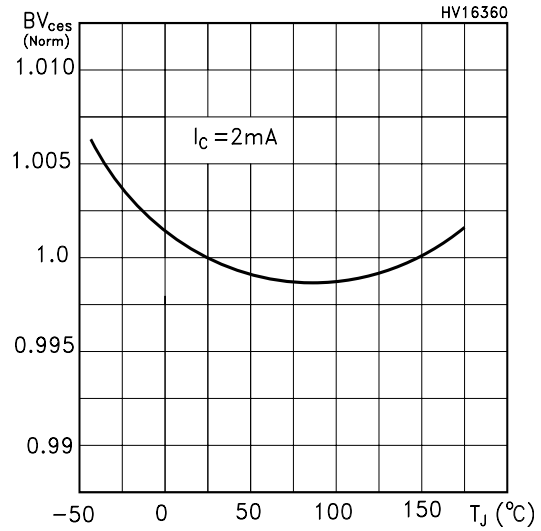

Normalized BVGE vs Temperature

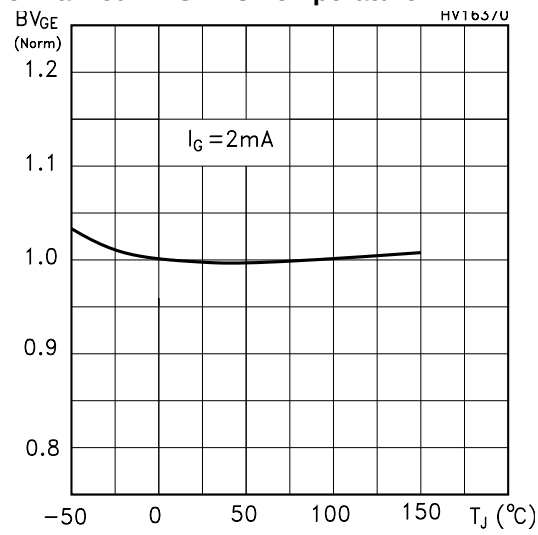

Off Losses vs Temperature

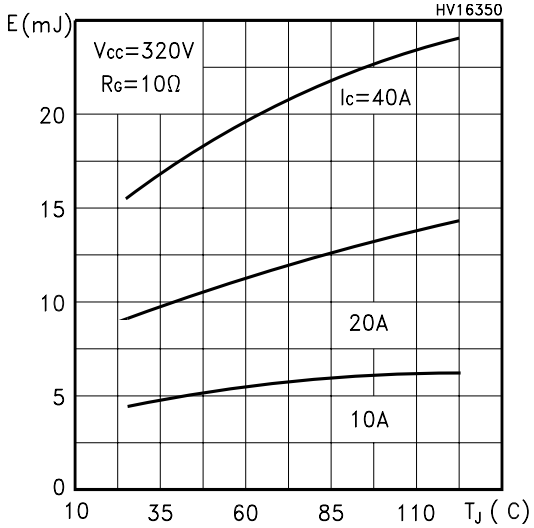

Switching Off Safe Operating Area

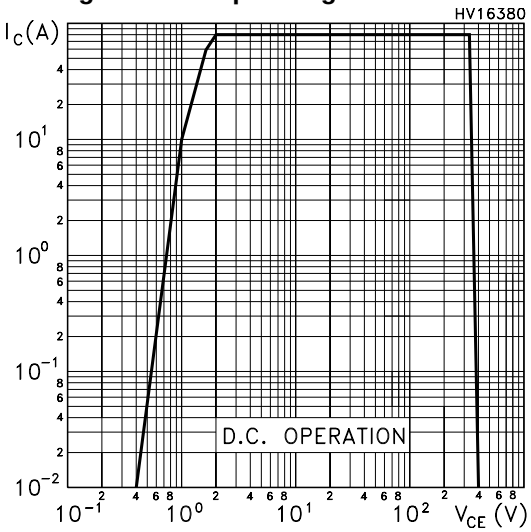

Thermal Impedance

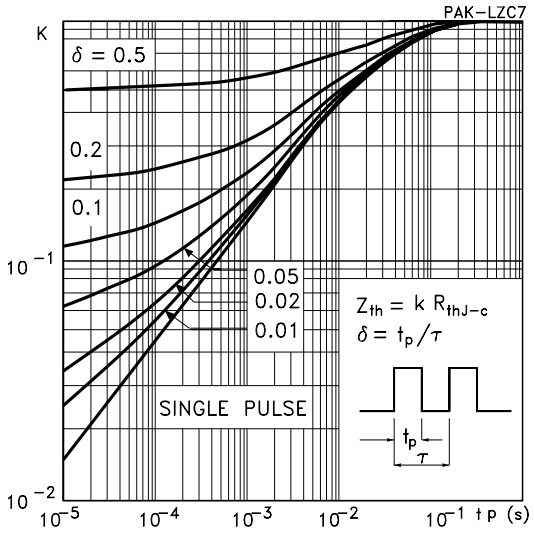

Target specification

D^2PAK MECHANICAL DATA

DIM.	mm.			inch		
	MIN.	TYP	MAX.	MIN.	TYP.	MAX.
A	4.4		4.6	0.173		0.181
A1	2.49		2.69	0.098		0.106
A2	0.03		0.23	0.001		0.009
B	0.7		0.93	0.027		0.036
B2	1.14		1.7	0.044		0.067
C	0.45		0.6	0.017		0.023
C2	1.23		1.36	0.048		0.053
D	8.95		9.35	0.352		0.368
D1		8			0.315	
E	10		10.4	0.393		
E1		8.5			0.334	
G	4.88		5.28	0.192		0.208
L	15		15.85	0.590		0.625
L2	1.27		1.4	0.050		0.055
L3	1.4		1.75	0.055		0.068
M	2.4		3.2	0.094		0.126
R		0.4			0.015	
V2	0º		8º			

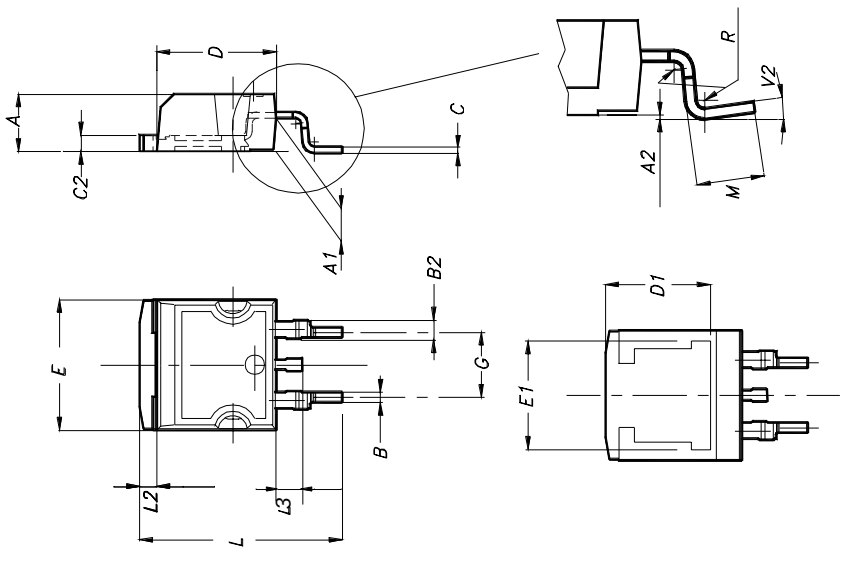

Target specification

D²PAK FOOTPRINT

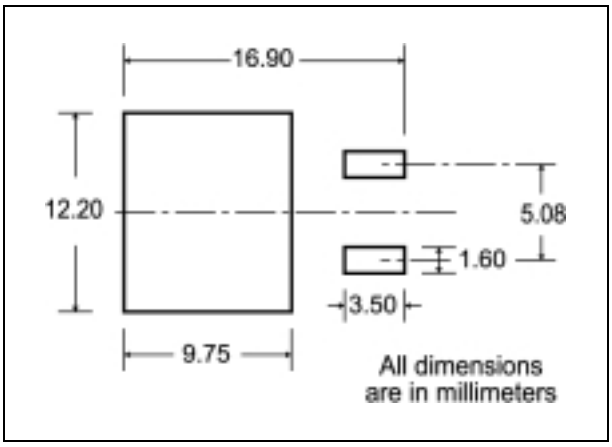

TUBE SHIPMENT (no suffix)*

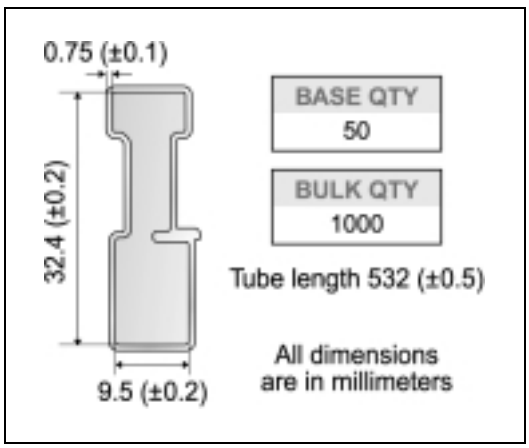

TAPE AND REEL SHIPMENT (suffix "T4")*

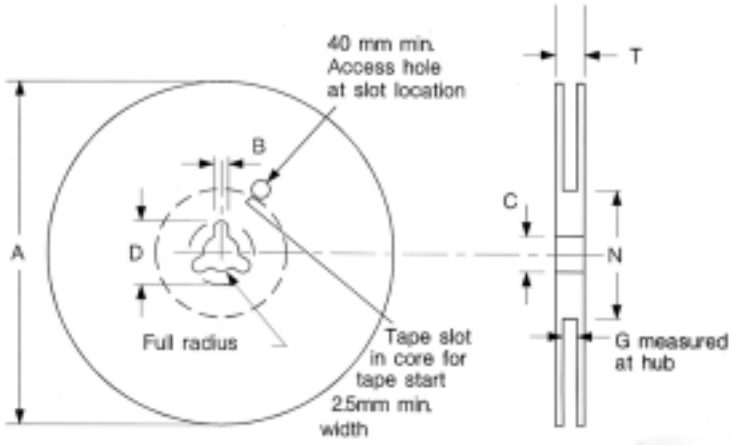

REEL MECHANICAL DATA

DIM.	mm		inch	
	MIN.	MAX.	MIN.	MAX.
A		330		12.992
B	1.5		0.059	
C	12.8	13.2	0.504	0.520
D	20.2		0795	
G	24.4	26.4	0.960	1.039
N	100		3.937	
T		30.4		1.197

BASE QTY	BULK QTY
1000	1000

TAPE MECHANICAL DATA

DIM.	mm		inch	
	MIN.	MAX.	MIN.	MAX.
A0	10.5	10.7	0.413	0.421
B0	15.7	15.9	0.618	0.626
D	1.5	1.6	0.059	0.063
D1	1.59	1.61	0.062	0.063
E	1.65	1.85	0.065	0.073
F	11.4	11.6	0.449	0.456
K0	4.8	5.0	0.189	0.197
P0	3.9	4.1	0.153	0.161
P1	11.9	12.1	0.468	0.476
P2	1.9	2.1	0.075	0.082
R	50		1.574	
T	0.25	0.35	0.0098	0.0137
W	23.7	24.3	0.933	0.956

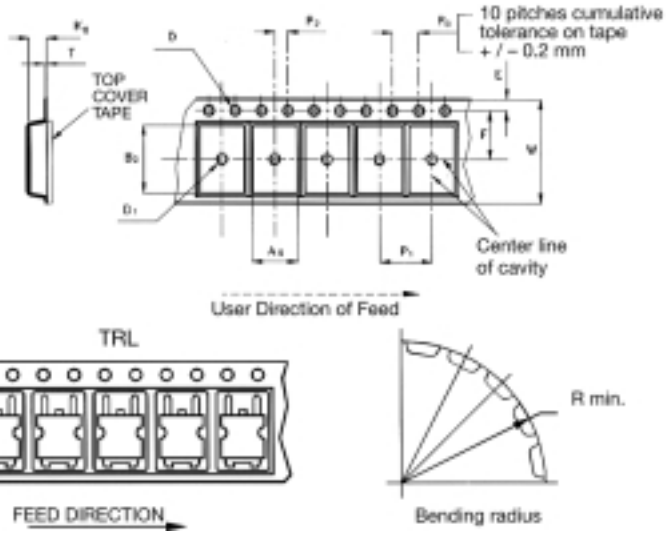

* on sales type

Target specification

Target specification

Information furnished is believed to be accurate and reliable. However, STMicroelectronics assumes no responsibility for the consequences of use of such information nor for any infringement of patents or other rights of third parties which may result from its use. No license is granted by implication or otherwise under any patent or patent rights of STMicroelectronics. Specifications mentioned in this publication are subject to change without notice. This publication supersedes and replaces all information previously supplied. STMicroelectronics products are not authorized for use as critical components in life support devices or systems without express written approval of STMicroelectronics.

The ST logo is a registered trademark of STMicroelectronics

All other names are the property of their respective owners

© 2004 STMicroelectronics - All Rights Reserved

STMicroelectronics GROUP OF COMPANIES

Australia - Belgium - Brazil - Canada - China - Czech Republic - Finland - France - Germany - Hong Kong - India - Israel - Italy - Japan - Malaysia - Malta - Morocco - Singapore - Spain - Sweden - Switzerland - United Kingdom - United States.

http://www.st.com