STPS10L40C

Low drop power Schottky rectifier

Datasheet - production data

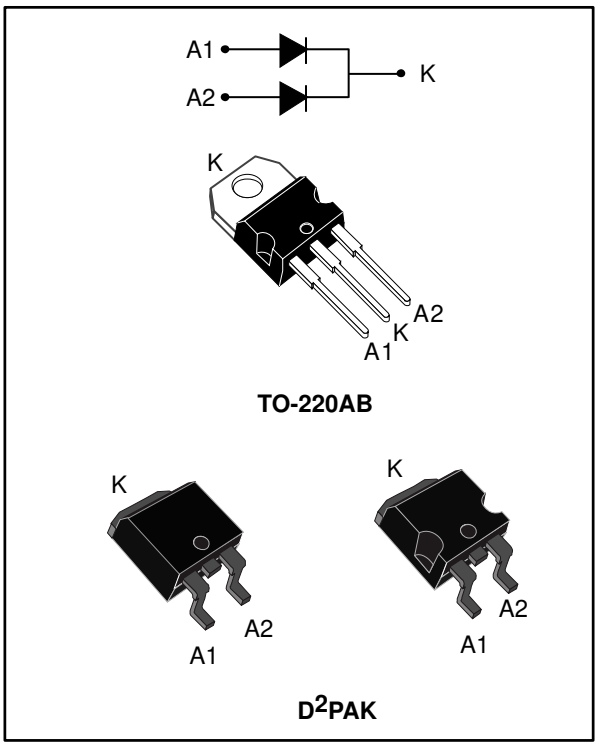

Description

Dual center tap Schottky rectifier suited for switch mode power supply and high frequency DC to DC converters.

Packaged either in TO-220AB and D²PAK, this device is especially intended for use in low voltage, high frequency inverters, free wheeling and polarity protection applications.

Table 1: Device summary

Symbol	Value
$I_{F(AV)}$	2 x 5 A
V_{RRM}	40 V
T_j (max.)	150 °C
V_F (typ.)	0.36 V

Features

- Low forward voltage drop meaning very small conduction losses
- Low dynamic losses as a result of the schottky barrier
- Avalanche capability specified
- ECOPACK®2 compliant component for D²PAK on demand

This is information on a product in full production.

www.st.com

1 Characteristics

Table 2: Absolute ratings (limiting values, per diode, at 25 °C, unless otherwise specified)

Symbol	Parameter			Value	Unit
V_{RRM}	Repetitive peak reverse voltage			40	V
$I_{F(RMS)}$	Forward rms current			20	A
$I_{F(AV)}$	Average forward current δ = 0.5, square wave	T_C = 140 °C	Per diode	5	A
			Per device	10	
I_{FSM}	Surge non repetitive forward current	t_p = 10 ms sinusoidal		150	A
P_{ARM}	Repetitive peak avalanche power	t_p = 10 µs, T_j = 125 °C		190	W
T_{stg}	Storage temperature range			-65 to +150	°C
T_j	Maximum operating junction temperature (1)			+150	°C

Notes:

(1)$(dP_{tot}/dT_j) < (1/R_{th(j-a)})$ condition to avoid thermal runaway for a diode on its own heatsink.

Table 3: Thermal parameters

Symbol	Parameter		Value	Unit
$R_{th(j-c)}$	Junction to case	Per diode	3.0	°C/W
		Total	1.7	
$R_{th(c)}$	Coupling	-	0.35	°C/W

When the diodes 1 and 2 are used simultaneously:

$\Delta T_{j\ (diode1)} = P_{(diode1)} \times R_{th(j-c)}$ (per diode) + $P_{(diode2)} \times R_{th(c)}$

Table 4: Static electrical characteristics (per diode)

Symbol	Parameter	Test conditions		Min.	Typ.	Max.	Unit
I_R (1)	Reverse leakage current	T_j = 25 °C	$V_R = V_{RRM}$	-		0.2	mA
		T_j = 100 °C		-	8	25	mA
V_F (1)	Forward voltage drop	T_j = 25 °C	I_F = 5 A	-		0.53	V
		T_j = 100 °C	I_F = 5 A	-	0.36	0.46	
		T_j = 25 °C	I_F = 10 A	-		0.67	
		T_j = 125 °C	I_F = 10 A	-	0.49	0.59	

Notes:

(1)Pulse test: t_p = 380 µs, δ < 2%

To evaluate the conduction losses use the following equation:

$P = 0.33 \times I_{F(AV)} + 0.026\ I_{F^2(RMS)}$

1.1 Characteristics (curves)

Figure 1: Average forward power dissipation versus average forward current (per diode)

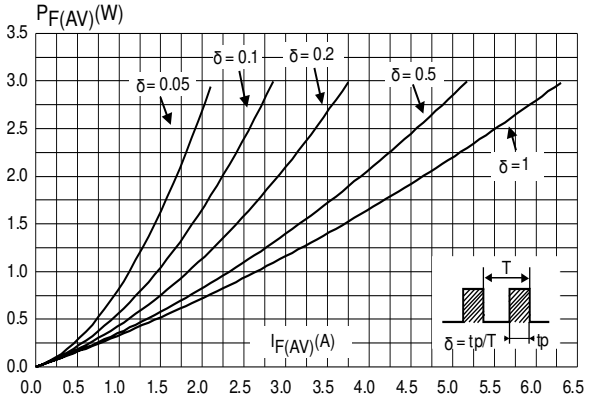

Figure 2: Average forward current versus ambient temperature (δ = 0.5, per diode)

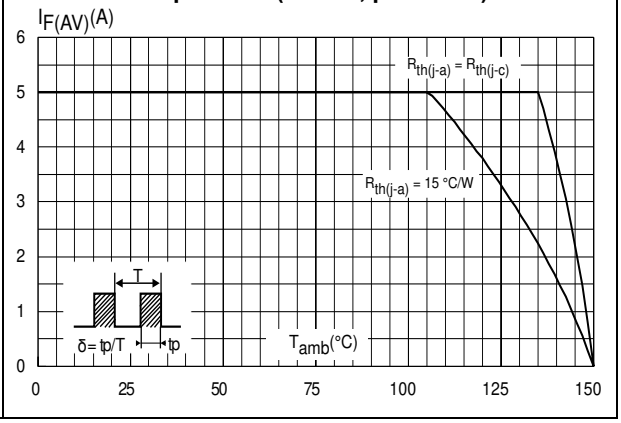

Figure 3: Normalized avalanche power derating versus pulse duration (Tj = 125 °C)

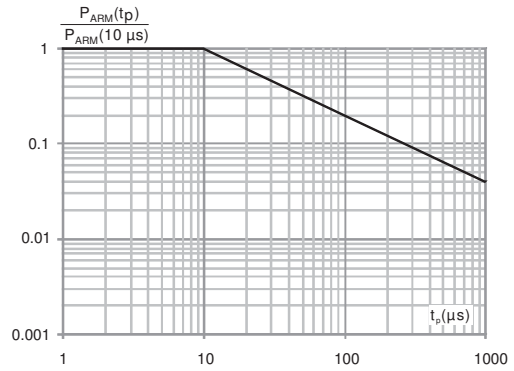

Figure 4: Relative variation of thermal impedance junction to case versus pulse duration

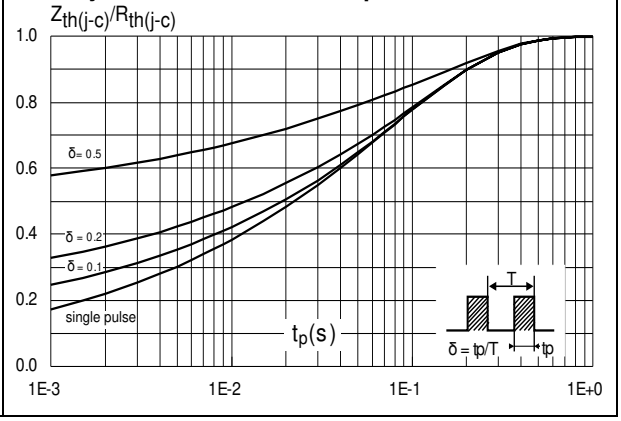

Figure 5: Reverse leakage current versus reverse voltage applied (typical values, per diode)

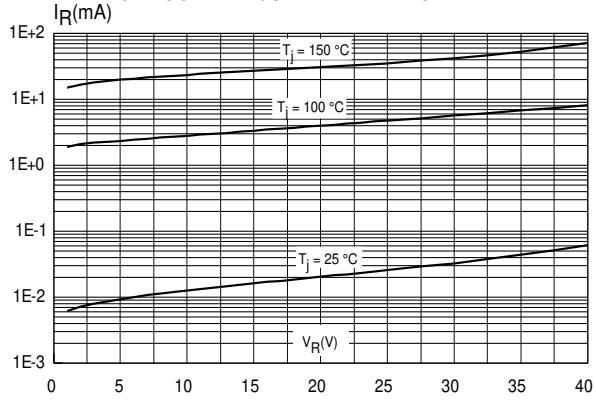

Figure 6: Junction capacitance versus reverse voltage applied (typical values, per diode)

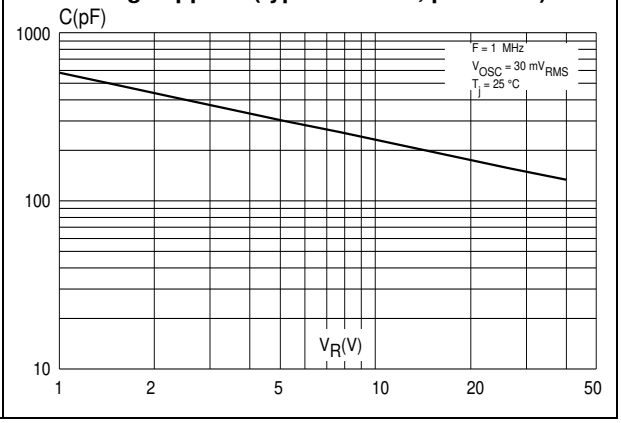

Figure 7: Forward voltage drop versus forward current (maximum values, per diode)

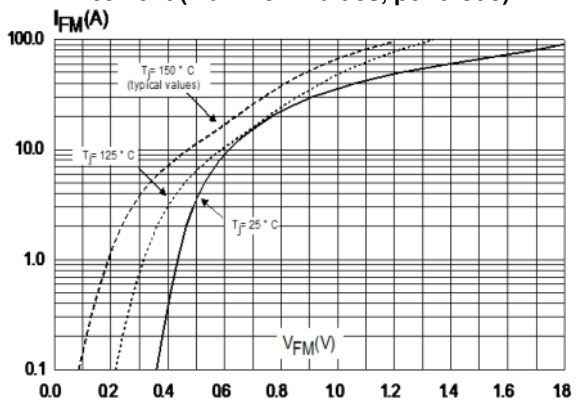

Figure 8: Thermal resistance junction to ambient versus copper surface under tab for D²PAK

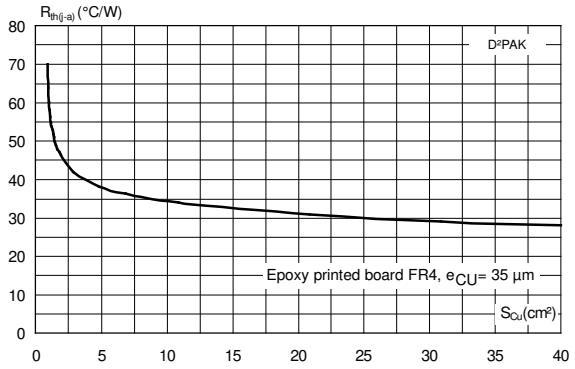

2 Package information

In order to meet environmental requirements, ST offers these devices in different grades of ECOPACK® packages, depending on their level of environmental compliance. ECOPACK® specifications, grade definitions and product status are available at: ***www.st.com***. ECOPACK® is an ST trademark.

- Cooling method: by conduction (C)
- Epoxy meets UL 94,V0
- Recommended torque value: 0.55 N·m (for TO-220AB)
- Maximum torque value: 0.7 N·m (for TO-220AB)

2.1 D²PAK package information

Figure 9: D²PAK package outline

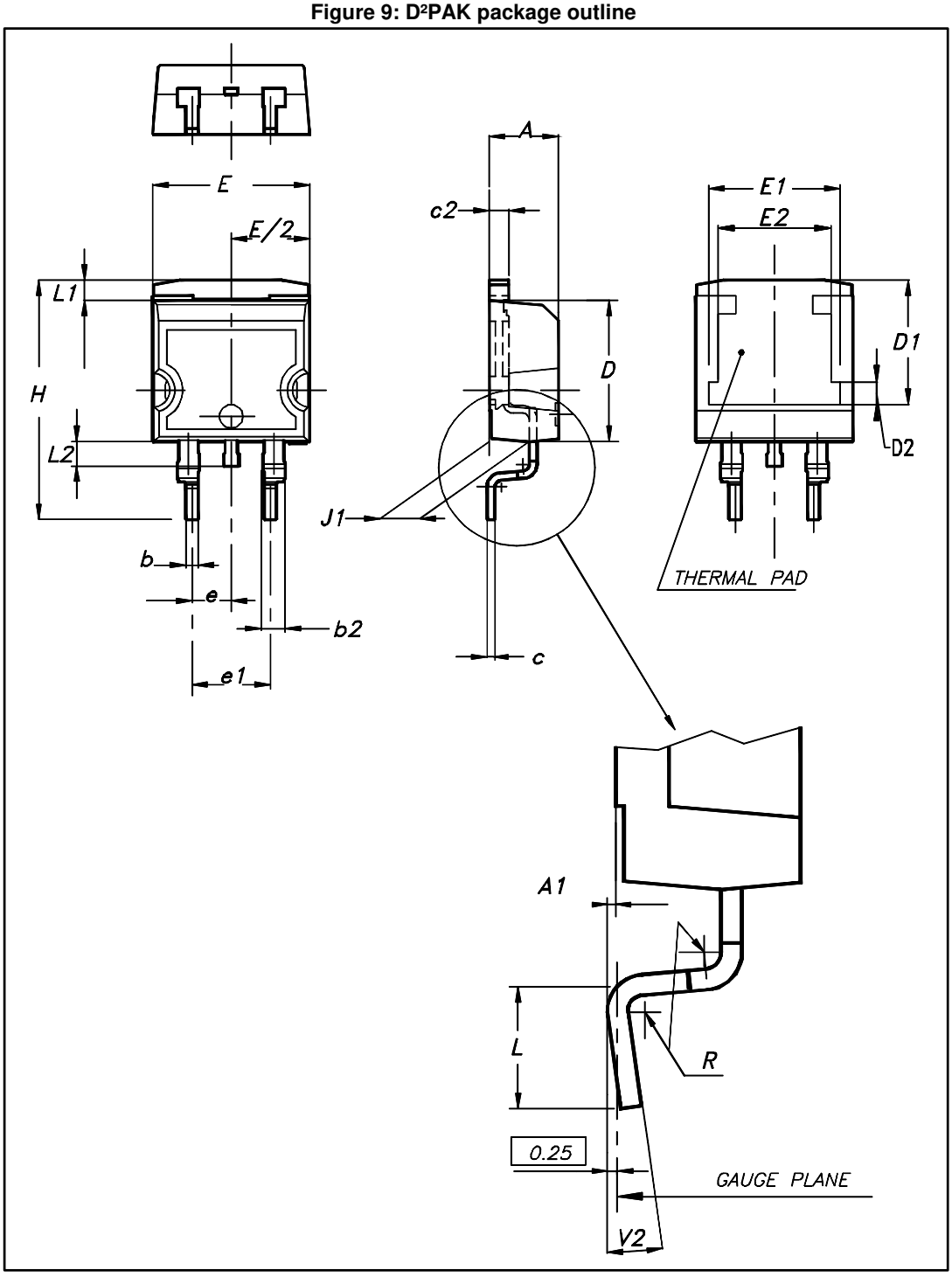

This package drawing may slightly differ from the physical package. However, all the specified dimensions are guaranteed.

Table 5: D²PAK package mechanical data

Ref.	Dimensions			
	Millimeters		Inches	
	Min.	Max.	Min.	Max.
A	4.36	4.60	0.172	0.181
A1	0.00	0.25	0.000	0.010
b	0.70	0.93	0.028	0.037
b2	1.14	1.70	0.045	0.067
c	0.38	0.69	0.015	0.027
c2	1.19	1.36	0.047	0.053
D	8.60	9.35	0.339	0.368
D1	6.90	8.00	0.272	0.311
D2	1.10	1.50	0.043	0.060
E	10.00	10.55	0.394	0.415
E1	8.10	8.90	0.319	0.346
E2	6.85	7.25	0.266	0.282
e	2.54 typ.		0.100	
e1	4.88	5.28	0.190	0.205
H	15.00	15.85	0.591	0.624
J1	2.49	2.90	0.097	0.112
L	1.90	2.79	0.075	0.110
L1	1.27	1.65	0.049	0.065
L2	1.30	1.78	0.050	0.070
R	0.4 typ.		0.015	
V2	0°	8°	0°	8°

Figure 10: D²PAK recommended footprint (dimensions in mm)

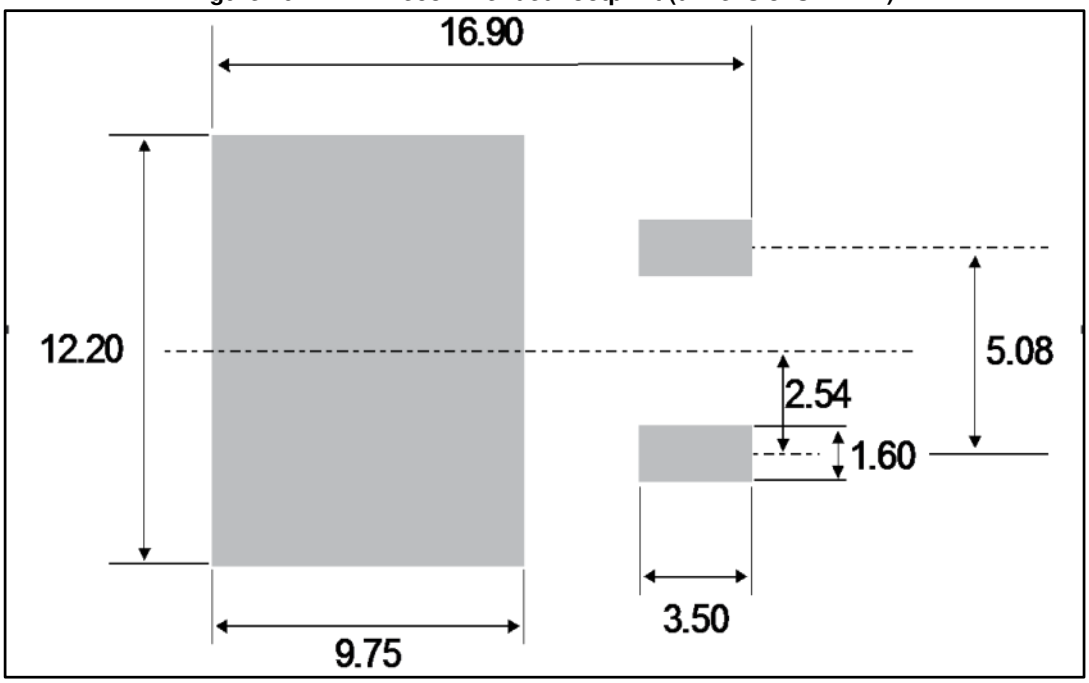

2.2 TO-220AB package information

Figure 11: TO-220AB package outline

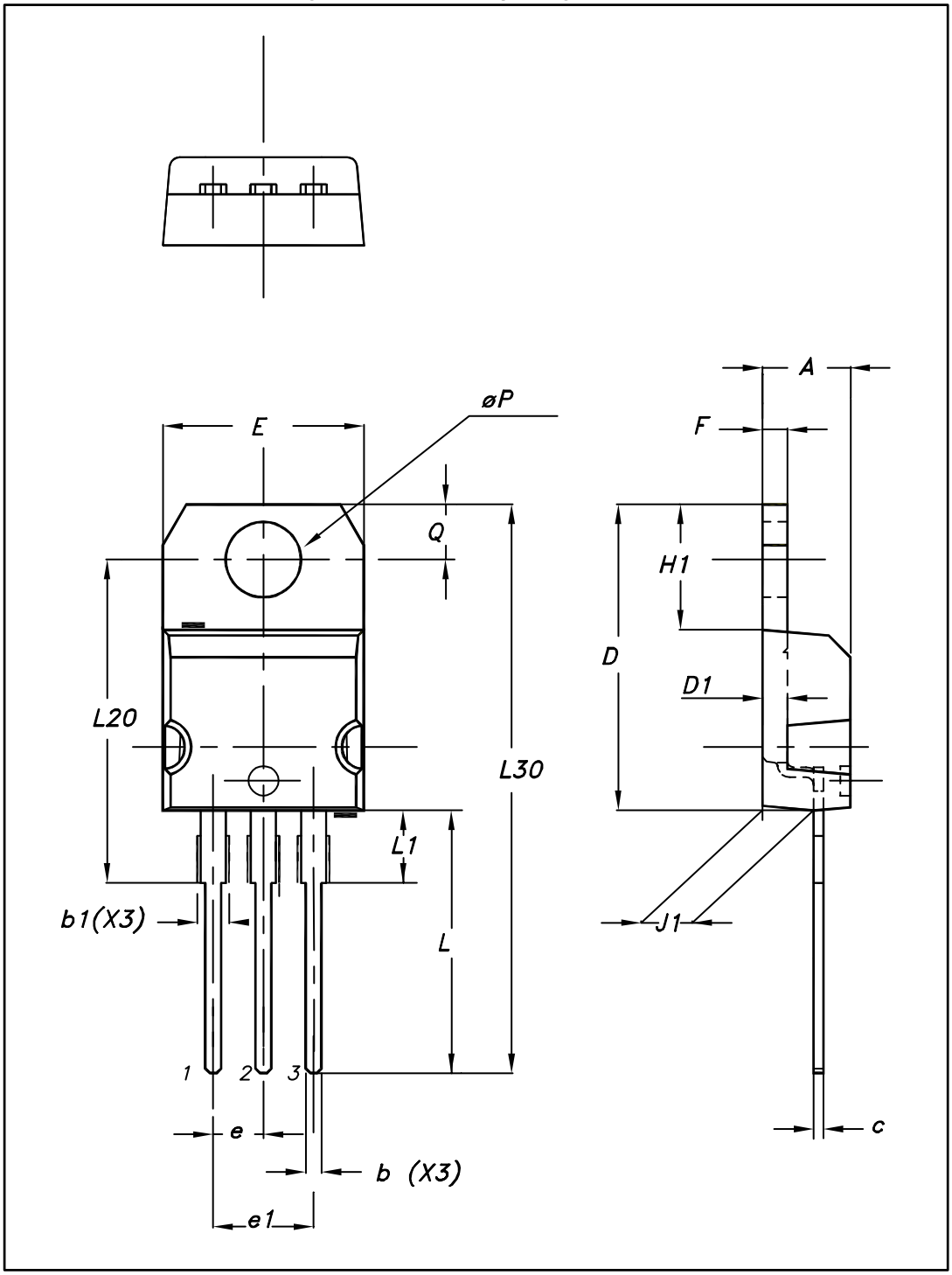

Table 6: TO-220AB package mechanical data

Ref.	Dimensions			
	Millimeters		Inches	
	Min.	Max.	Min.	Max.
A	4.40	4.60	0.173	0.181
b	0.61	0.88	0.240	0.035
b1	1.14	1.70	0.045	0.067
c	0.48	0.70	0.019	0.028
D	15.25	15.75	0.600	0.620
D1	1.27 typ.		0.050 typ.	
E	10.00	10.40	0.394	0.409
e	2.40	2.70	0.094	0.106
e1	4.95	5.15	0.195	0.203
F	1.23	1.32	0.048	0.052
H1	6.20	6.60	0.244	0.260
J1	2.40	2.72	0.094	0.107
L	13.00	14.00	0.512	0.551
L1	3.50	3.93	0.138	0.155
L20	16.40 typ.		0.646 typ.	
L30	28.90 typ.		1.138 typ.	
θP	3.75	3.85	0.148	0.152
Q	2.65	2.95	0.104	0.116

3 Ordering information

Table 7: Ordering information

Order code	Marking	Package	Weight	Base qty.	Delivery mode
STPS10L40CT	STPS10L40CT	TO-220AB	1.95 g	50	Tube
STPS10L40CG-TR	STPS10L40CG	D^2PAK	1.38 g	1000	Tape and reel

4 Revision history

Table 8: Document revision history

Date	Revision	Changes
Jul-2003	5B	Last release.
23-Mar-2007	6	Removed ISOWATT packages.
08-Apr-2016	7	Removed DPAK package. Updated features and packages silhouette in cover page. Updated *Section 1: "Characteristics"* and *Section 1.1: "Characteristics (curves)"*. Updated *Section 2.1: "D²PAK package information"*.

IMPORTANT NOTICE – PLEASE READ CAREFULLY

STMicroelectronics NV and its subsidiaries (“ST”) reserve the right to make changes, corrections, enhancements, modifications, and improvements to ST products and/or to this document at any time without notice. Purchasers should obtain the latest relevant information on ST products before placing orders. ST products are sold pursuant to ST’s terms and conditions of sale in place at the time of order acknowledgement.

Purchasers are solely responsible for the choice, selection, and use of ST products and ST assumes no liability for application assistance or the design of Purchasers’ products.

No license, express or implied, to any intellectual property right is granted by ST herein.

Resale of ST products with provisions different from the information set forth herein shall void any warranty granted by ST for such product.

ST and the ST logo are trademarks of ST. All other product or service names are the property of their respective owners.

Information in this document supersedes and replaces information previously supplied in any prior versions of this document.

© 2016 STMicroelectronics – All rights reserved