STGD5NB120SZ

Datasheet

5 A, 1200 V, low drop internally clamped IGBT

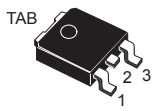

DPAK

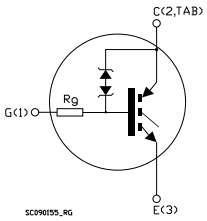

Features

- Low on-voltage drop ($V_{CE(sat)}$)
- High current capability
- High voltage clamping

Applications

- Low switching frequency applications

Description

This device is low drop internally clamped IGBT developed using advanced PowerMESH technology. This process guarantees an excellent trade-off between switching performance and low on-state behavior.

Product status link
STGD5NB120SZ

Product summary	
Order code	STGD5NB120SZ
Marking	GD5NB120SZ
Package	DPAK
Packing	Tape and reel

1 Electrical ratings

Table 1. Absolute maximum ratings

Symbol	Parameter	Value	Unit
V_{CES}	Collector-emitter voltage (V_{GE} = 0 V)	1200	V
I_C	Continuous collector current at T_C = 25 °C	10	A
	Continuous collector current at T_C = 100 °C	5	
I_{CP}(1)	Pulsed collector current	10	A
I_{CL}(2)	Turn-off latching current	10	A
V_{GE}	Gate-emitter voltage	±20	V
V_{ECR}	Emitter-collector voltage	20	V
P_{TOT}	Total power dissipation at T_C = 25 °C	75	W
T_J	Operating junction temperature range	-55 to 150	°C
T_{stg}	Storage temperature range		°C

1. *Pulse width is limited by maximum junction temperature.*
2. *V_{CLAMP} = 80% V_{CES}, V_{GE} = 15 V, R_G = 10 Ω, T_J = 150 °C.*

Table 2. Thermal data

Symbol	Parameter	Value	Unit
R_{thJC}	Thermal resistance, junction-to-case	1.67	°C/W
R_{thJA}	Thermal resistance, junction-to-ambient	100	°C/W

2 Electrical characteristics

T_C = 25 °C unless otherwise specified

Table 3. Static characteristics

Symbol	Parameter	Test conditions	Min.	Typ.	Max.	Unit
$V_{(BR)CES}$	Collector-emitter breakdown voltage	V_{GE} = 0 V, I_C = 10 mA	1200			V
$V_{CE(sat)}$	Collector-emitter saturation voltage	V_{GE} = 15 V, I_C = 5 A		1.3	2.0	V
		V_{GE} = 15 V, I_C = 5 A, T_C = 125 °C		1.2		
$V_{GE(th)}$	Gate threshold voltage	V_{CE} = V_{GE}, I_C = 250 µA	2		5	V
V_{GE}	Gate-emitter voltage	V_{CE} = 2.5 V, I_C = 2 A, T_C = 25 to 125 °C			6.5	V
I_{CES}	Collector cut-off current	V_{GE} = 0 V, V_{CE} = 900 V			50	µA
		V_{GE} = 0 V, V_{CE} = 900 V, T_C = 125 °C (1)			250	µA
I_{GES}	Gate-emitter leakage current	V_{GE} = ±20 V, V_{CE} = 0 V			±100	nA
R_G	Gate resistance			4		kΩ

1. *Defined by design, not subject to production test.*

Table 4. Dynamic characteristics

Symbol	Parameter	Test conditions	Min.	Typ.	Max.	Unit
C_{ies}	Input capacitance	V_{CE} = 25 V, f = 1 MHz, V_{GE} = 0 V	-	430	-	pF
C_{oes}	Output capacitance		-	40	-	pF
C_{res}	Reverse transfer capacitance		-	7	-	pF

Table 5. Switching characteristics (inductive load)

Symbol	Parameter	Test conditions	Min.	Typ.	Max.	Unit
$t_{d(on)}$	Turn-on delay time	V_{CC} = 960 V, I_C = 5 A, R_G = 1 kΩ, V_{GE} = 15 V (see Figure 16. Switching waveform)	-	690	-	ns
t_r	Current rise time		-	170	-	ns
$(di/dt)_{on}$	Turn-on current slope		-	39.6	-	A/µs
$t_{d(on)}$	Turn-on delay time	V_{CC} = 960 V, I_C = 5 A, R_G = 1 kΩ, V_{GE} = 15 V, T_J = 125 °C (see Figure 16. Switching waveform)	-	600	-	ns
t_r	Current rise time		-	185	-	ns
$(di/dt)_{on}$	Turn-on current slope		-	39	-	A/µs
t_c	Cross-over time	V_{CC} = 960 V, I_C = 5 A, R_G = 1 kΩ, V_{GE} = 15 V (see Figure 16. Switching waveform)	-	4	-	µs
$t_r(V_{off})$	Off voltage rise time		-	2.2	-	µs
$t_d(off)$	Turn-off delay time		-	12.1	-	µs
t_f	Current fall time		-	1.13	-	µs
t_c	Cross-over time	V_{CC} = 960 V, I_C = 5 A, R_G = 1 kΩ, V_{GE} = 15 V, T_J = 125 °C (see Figure 16. Switching waveform)	-	5	-	µs
$t_r(V_{off})$	Off voltage rise time		-	2.2	-	µs
$t_d(off)$	Turn-off delay time		-	12.1	-	µs
t_f	Current fall time		-	2	-	µs

Table 6. Switching energy (inductive load)

Symbol	Parameter	Test conditions	Min.	Typ.	Max.	Unit
E_{on} (1)	Turn-on switching energy	V_{CC} = 960 V, I_C = 5 A, R_G = 1 kΩ, V_{GE} = 15 V (see Figure 16. Switching waveform)	-	2.59	-	mJ
E_{off} (2)	Turn-off switching energy		-	9	-	mJ
E_{ts}	Total switching energy		-	11.59	-	mJ
E_{on} (1)	Turn-on switching energy	V_{CC} = 960 V, I_C = 5 A, R_G = 1 kΩ, V_{GE} = 15 V, T_J = 125 °C (see Figure 16. Switching waveform)	-	2.64	-	mJ
E_{off} (2)	Turn-off switching energy		-	10.2	-	mJ
E_{ts}	Total switching energy		-	12.68	-	mJ

1. *Including the reverse recovery of the diode.*
2. *Including the tail of the collector current.*

2.1 Electrical characteristics (curves)

Figure 1. Output characterisics

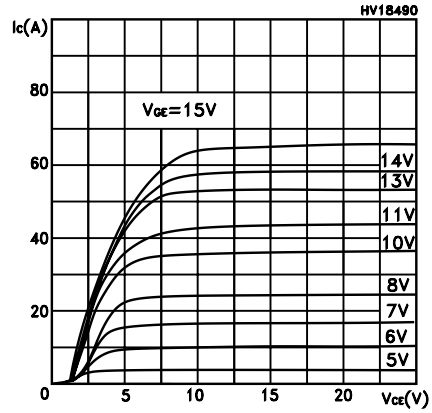

Figure 2. Transfer characteristics

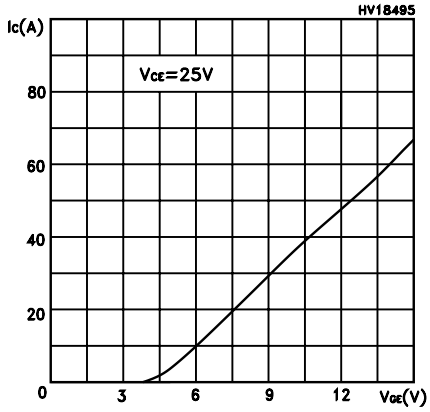

Figure 3. Collector-emitter on voltage vs temperature

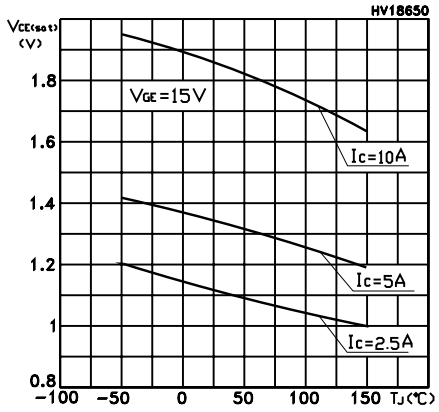

Figure 4. Gate charge vs gate-source voltage

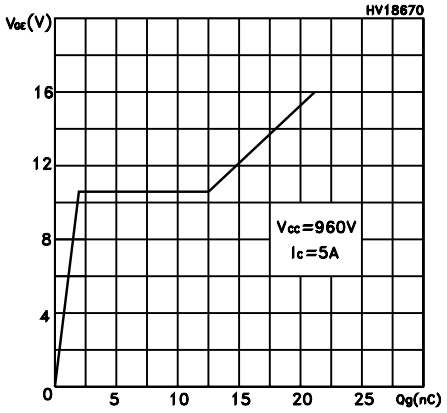

Figure 5. Capacitance variations

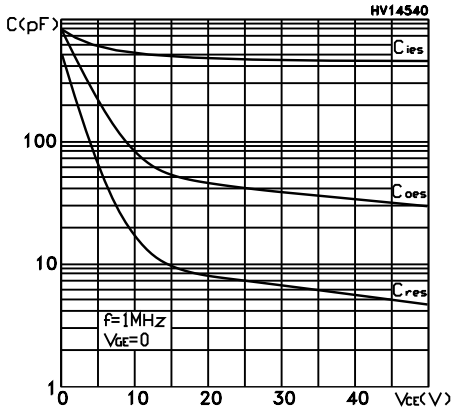

Figure 6. Normalized gate threshold voltage vs temperature

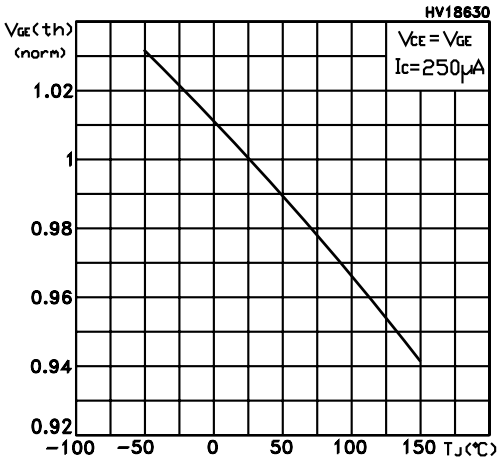

Figure 7. Collector-emitter on voltage vs collector current

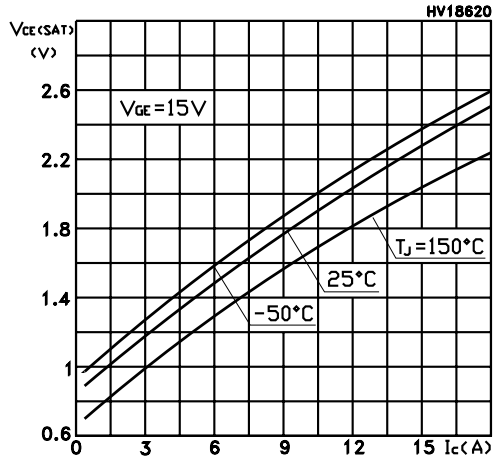

Figure 8. Breakdown voltage vs temperature

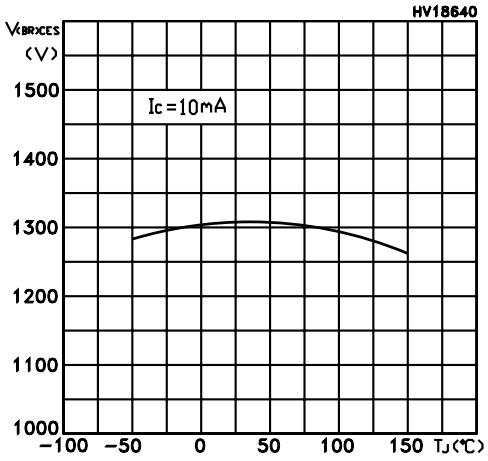

Figure 9. Normalized collector-emitter on voltage vs temperature

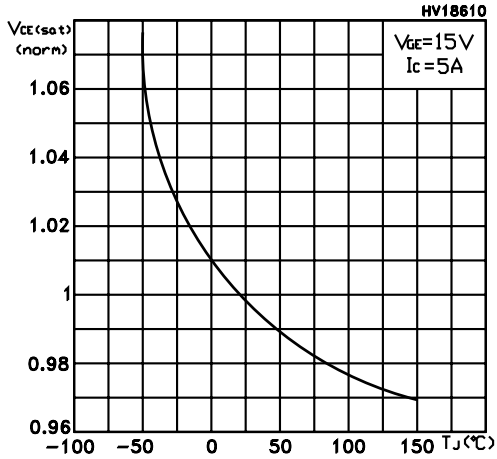

Figure 10. Switching energy vs gate resistance

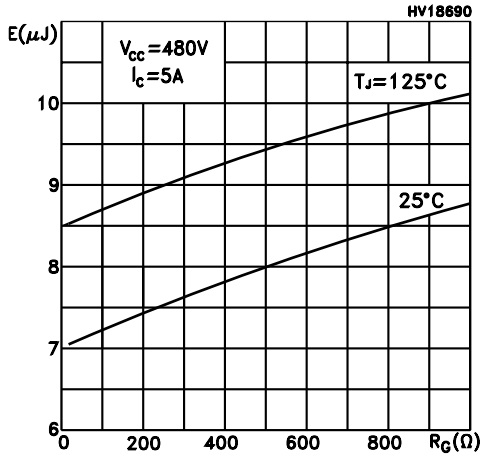

Figure 11. Switching energy vs collector current

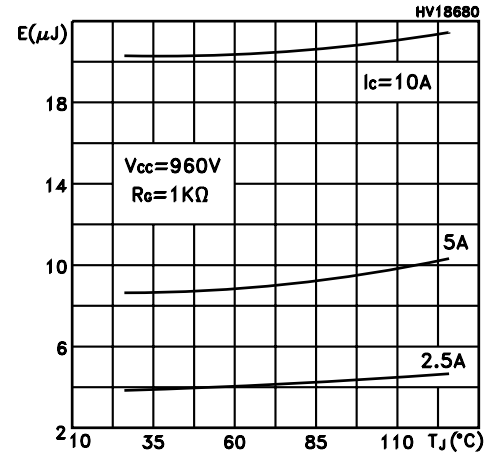

Figure 12. Turn-off SOA

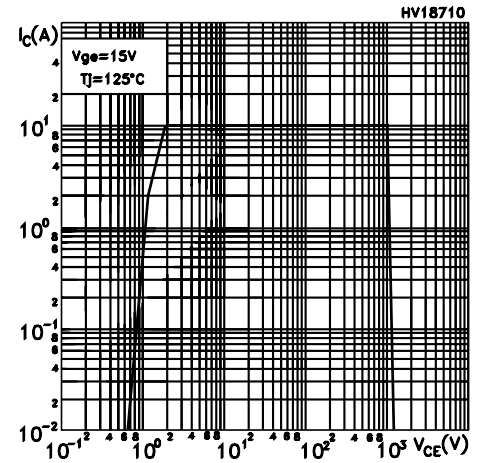

Figure 13. Thermal impedance

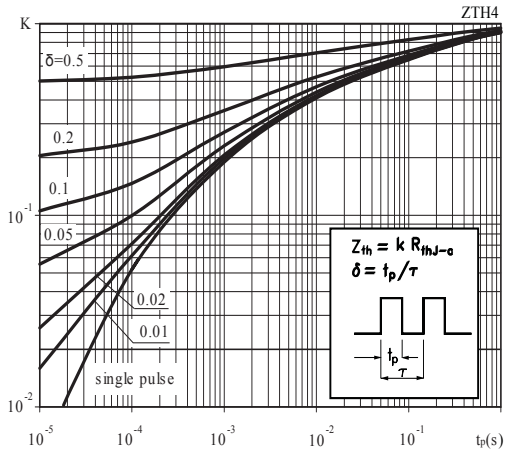

3 Test circuits

Figure 14. Test circuit for inductive load switching

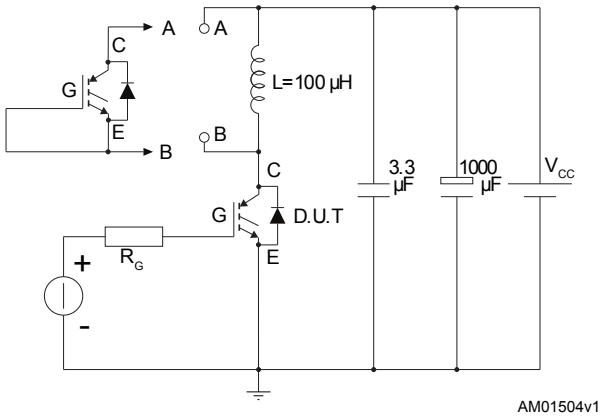

Figure 15. Gate charge test circuit

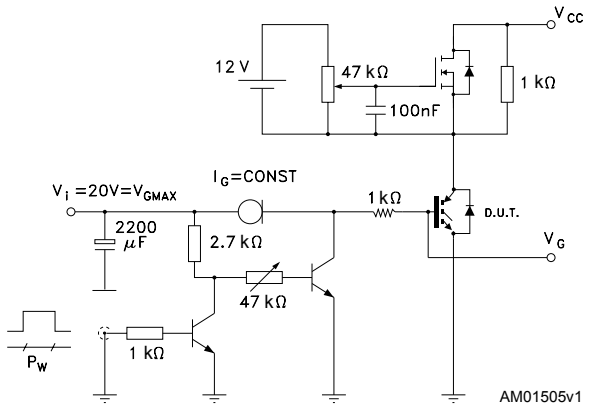

Figure 16. Switching waveform

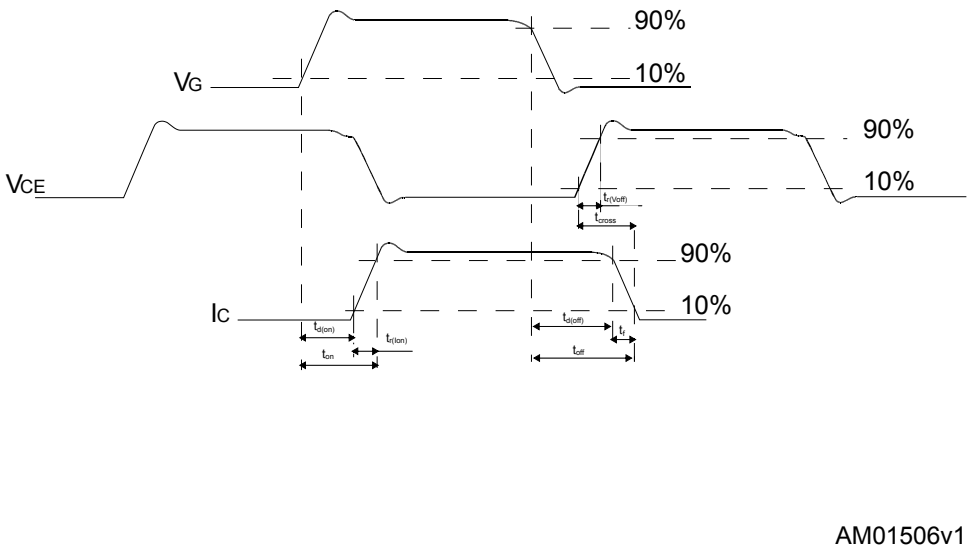

4 Package information

In order to meet environmental requirements, ST offers these devices in different grades of ECOPACK packages, depending on their level of environmental compliance. ECOPACK specifications, grade definitions and product status are available at: www.st.com. ECOPACK is an ST trademark.

4.1 DPAK (TO-252) type A2 package information

Figure 17. DPAK (TO-252) type A2 package outline

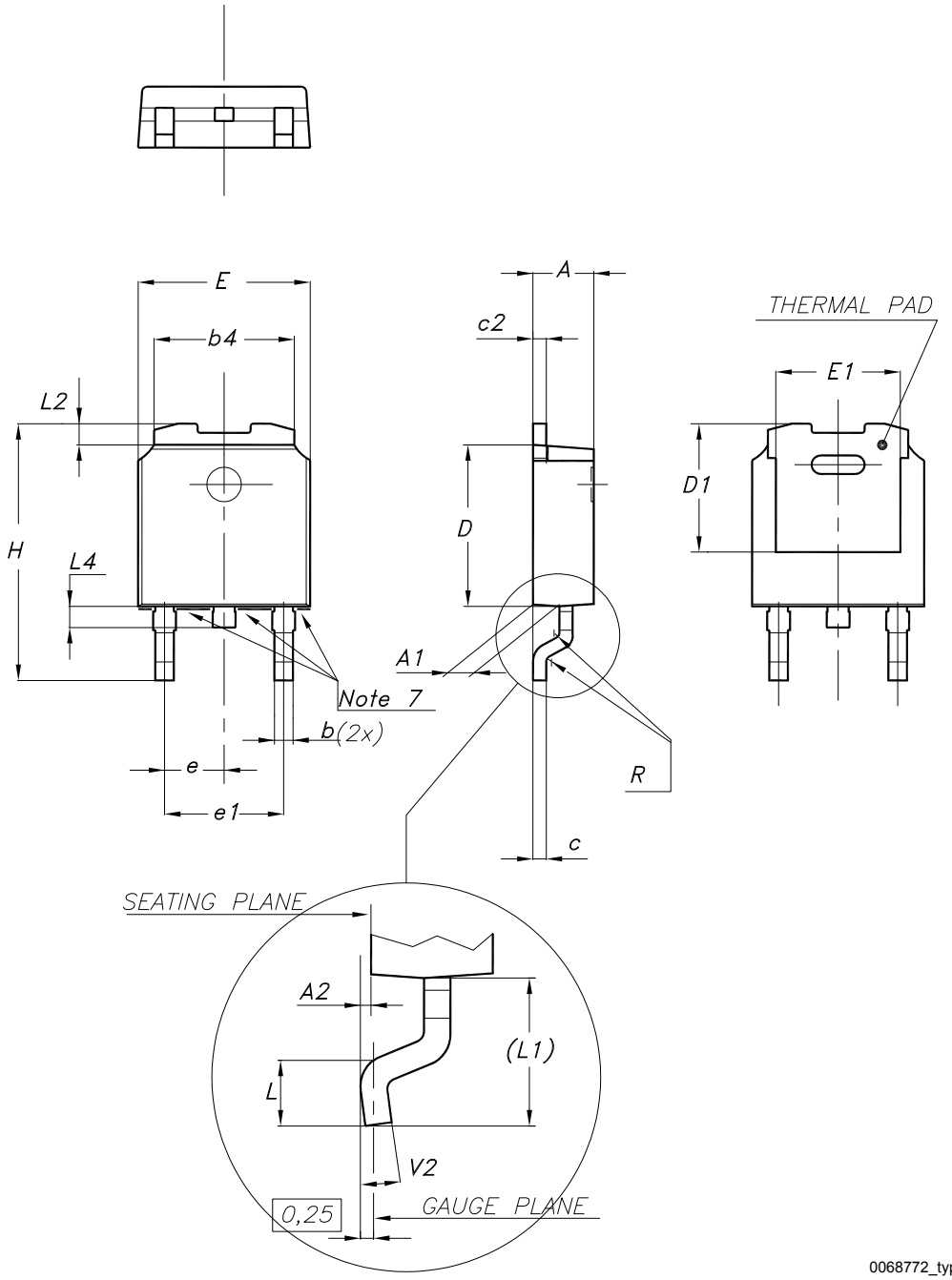

0068772_type-A2_rev34

Table 7. **DPAK (TO-252) type A2 mechanical data**

Dim.	mm		
	Min.	Typ.	Max.
A	2.20		2.40
A1	0.90		1.10
A2	0.03		0.23
b	0.64		0.90
b4	5.20		5.40
c	0.45		0.60
c2	0.48		0.60
D	6.00		6.20
D1	4.95	5.10	5.25
E	6.40		6.60
E1	5.10	5.20	5.30
e	2.159	2.286	2.413
e1	4.445	4.572	4.699
H	9.35		10.10
L	1.00		1.50
L1	2.60	2.80	3.00
L2	0.65	0.80	0.95
L4	0.60		1.00
R		0.20	
V2	0°		8°

4.2 DPAK (TO-252) type C3 package information

Figure 18. **DPAK (TO-252) type C3 package outline**

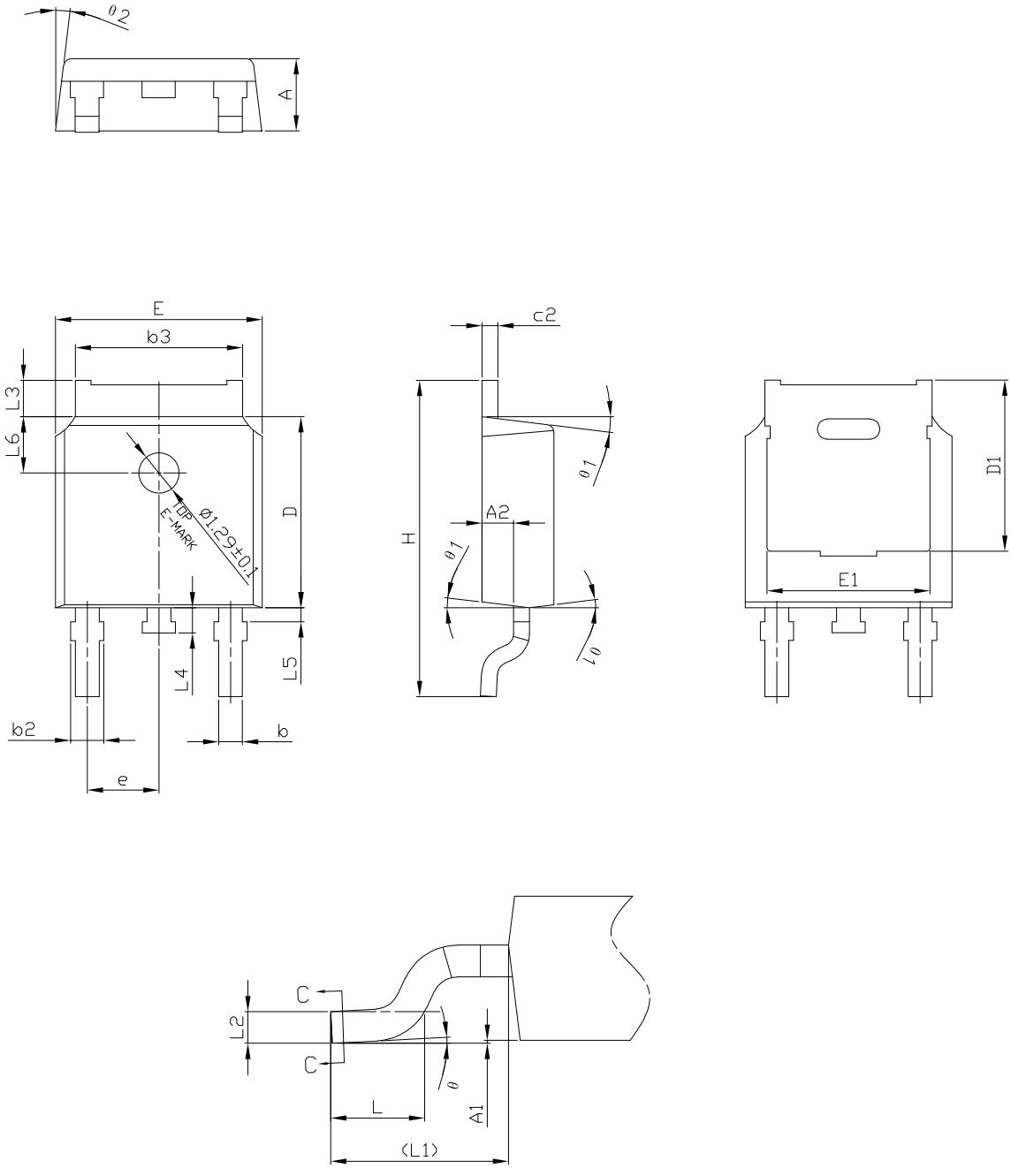

0068772_type-C3_rev34

Table 8. **DPAK (TO-252) type C3 mechanical data**

Dim.	mm		
	Min.	Typ.	Max.
A	2.20	2.30	2.38
A1	0.00		0.10
A2	0.90	1.01	1.10
b	0.72		0.85
b2	0.72		1.10
b3	5.13	5.33	5.46
c	0.47		0.60
c2	0.47		0.60
D	6.00	6.10	6.20
D1	5.20	5.45	5.70
E	6.50	6.60	6.70
E1	5.00	5.20	5.40
e	2.186	2.286	2.386
H	9.80	10.10	10.40
L	1.40	1.50	1.70
L1	2.90 REF		
L2	0.51 BSC		
L3	0.90		1.25
L4	0.60	0.80	1.00
L5	0.15		0.75
L6	1.80 REF		
θ	0°		8°
θ1	5°	7°	9°
θ2	5°	7°	9°

Figure 19. DPAK (TO-252) recommended footprint (dimensions are in mm)

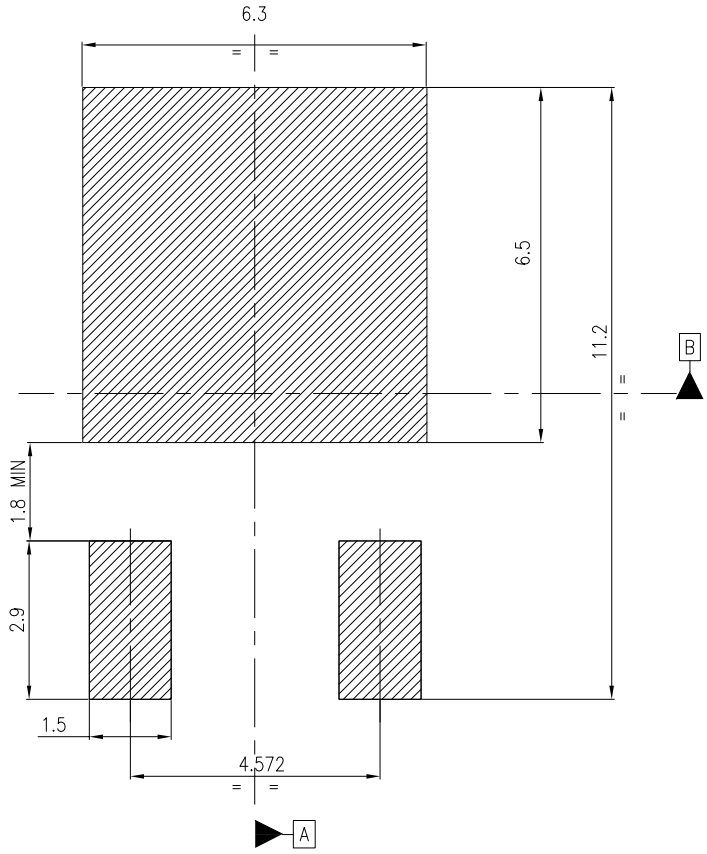

Notes:

1) This footprint is able to ensure insulation up to 630 Vrms (according to CEI IEC 664−1)

2) The device must be positioned within ⌖ | 0.05 | A | B

FP_0068772_34

4.3 DPAK (TO-252) packing information

Figure 20. **DPAK (TO-252) tape outline**

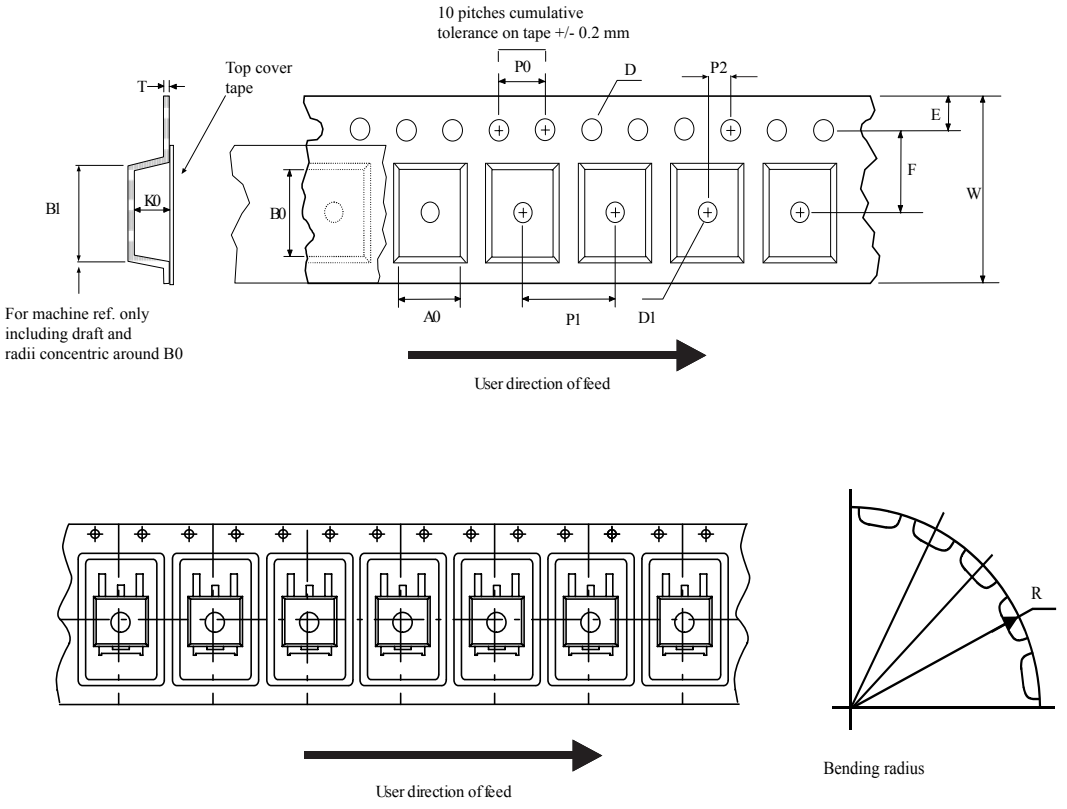

Figure 21. **DPAK (TO-252) reel outline**

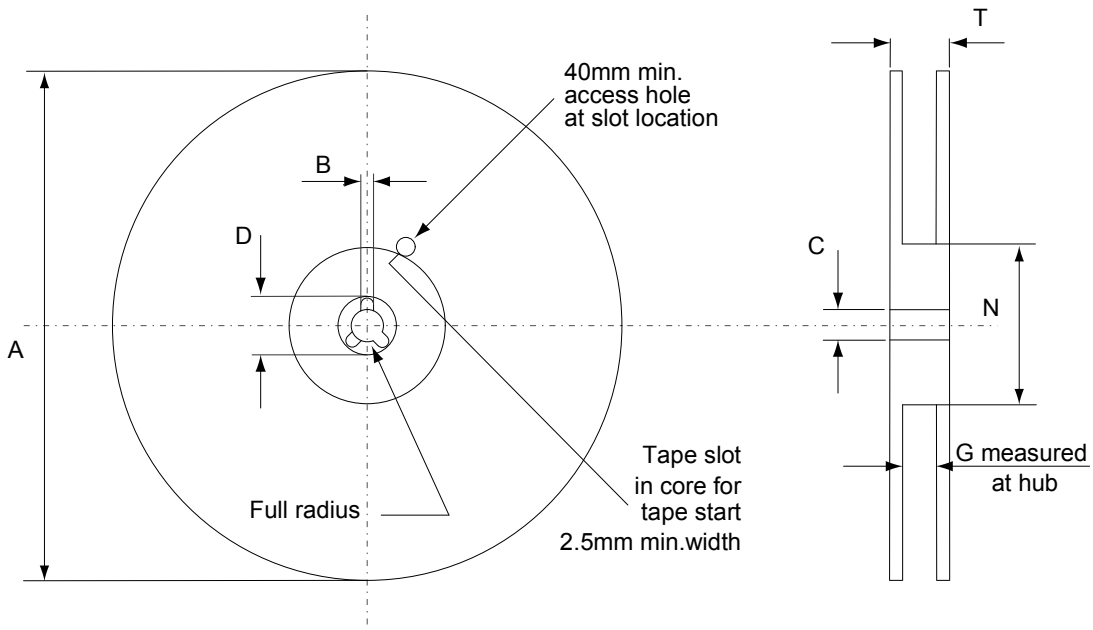

AM06038v1

Table 9. **DPAK (TO-252) tape and reel mechanical data**

Tape			Reel		
Dim.	mm		Dim.	mm	
	Min.	Max.		Min.	Max.
A0	6.8	7	A		330
B0	10.4	10.6	B	1.5	
B1		12.1	C	12.8	13.2
D	1.5	1.6	D	20.2	
D1	1.5		G	16.4	18.4
E	1.65	1.85	N	50	
F	7.4	7.6	T		22.4
K0	2.55	2.75			
P0	3.9	4.1	Base qty.		2500
P1	7.9	8.1	Bulk qty.		2500
P2	1.9	2.1			
R	40				
T	0.25	0.35			
W	15.7	16.3			

Revision history

Table 10. **Document revision history**

Date	Revision	Changes
06-Oct-2003	5	No history because migration
18-Jan-2005	6	Final datasheet
13-Nov-2008	7	Insert new value in *Table 2: Absolute maximum ratings*
08-Jan-2019	8	The document status is production data. Updated *Section 4 Package information.* Minor text changes.
15-Jun-2021	9	Removed IPAK package and document updated accordingly. Modified applications section on cover page. Modified *Table 1. Absolute maximum ratings*. Removed *Table 7: Functional test.* Minor text changes.
13-Apr-2023	10	Updated Section 4 Package information. Minor text changes.

Contents

1 **Electrical ratings** 2

2 **Electrical characteristics** 3

2.1 Electrical characteristics (curves) 5

3 **Test circuits** 8

4 **Package information** 9

4.1 DPAK (TO-252) type A2 package information 9

4.2 DPAK (TO-252) type C3 package information 11

4.3 DPAK (TO-252) packing information 14

Revision history 16

IMPORTANT NOTICE – READ CAREFULLY

STMicroelectronics NV and its subsidiaries (“ST”) reserve the right to make changes, corrections, enhancements, modifications, and improvements to ST products and/or to this document at any time without notice. Purchasers should obtain the latest relevant information on ST products before placing orders. ST products are sold pursuant to ST’s terms and conditions of sale in place at the time of order acknowledgment.

Purchasers are solely responsible for the choice, selection, and use of ST products and ST assumes no liability for application assistance or the design of purchasers’ products.

No license, express or implied, to any intellectual property right is granted by ST herein.

Resale of ST products with provisions different from the information set forth herein shall void any warranty granted by ST for such product.

ST and the ST logo are trademarks of ST. For additional information about ST trademarks, refer to www.st.com/trademarks. All other product or service names are the property of their respective owners.

Information in this document supersedes and replaces information previously supplied in any prior versions of this document.

© 2023 STMicroelectronics – All rights reserved