STD20NF06L

Datasheet

N-channel 60 V, 32 mΩ typ., 24 A, STripFET II Power MOSFET in a DPAK package

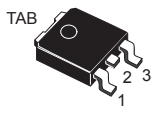

DPAK

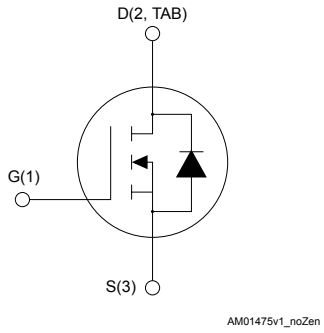

Features

Order code	V_{DS}	$R_{DS(on)}$ max.	I_D	P_{TOT}
STD20NF06L	60 V	40 mΩ	24 A	60 W

- Exceptional dv/dt capability
- 100% avalanche tested
- Low gate charge

Applications

- Switching applications

Description

This Power MOSFET has been developed using STMicroelectronics' unique STripFET process, which is specifically designed to minimize input capacitance and gate charge. This renders the device suitable for use as primary switch in advanced high-efficiency isolated DC-DC converters for telecom and computer applications, and applications with low gate charge driving requirements.

Product status link
STD20NF06L

Product summary	
Order code	STD20NF06LT4
Marking	D20NF06L
Package	DPAK
Packing	Tape and reel

1 Electrical ratings

Table 1. Absolute maximum ratings

Symbol	Parameter	Value	Unit
V_{DS}	Drain-source voltage	60	V
V_{GS}	Gate-source voltage	±18	V
I_D	Drain current (continuous) at T_C = 25 °C	24	A
	Drain current (continuous) at T_C = 100 °C	17	
I_{DM}(1)	Drain current (pulsed)	96	A
P_{TOT}	Total power dissipation at T_C = 25 °C	60	W
	Derating factor	0.4	W/°C
dv/dt(2)	Peak diode recovery voltage slope	10	V/ns
E_{AS}(3)	Single pulse avalanche energy	225	mJ
T_{stg}	Storage temperature range	-55 to 175	°C
T_J	Operating junction temperature range		

1. *Pulse width is limited by safe operating area.*
2. *I_{SD} ≤ 24 A, di/dt ≤ 300 A/ns, V_{DD} = 80% $V_{(BR)DSS}$*
3. *Starting T_J = 25 °C, I_D = I_{AR} A, V_{DD} = 45 V.*

Table 2. Thermal data

Symbol	Parameter	Value	Unit
R_{thJC}	Thermal resistance, junction-to-case	2.5	°C/W
R_{thJB}(1)	Thermal resistance, junction-to-board	50	

1. *When mounted on a 1-inch² FR-4, 2 Oz copper board.*

2 Electrical characteristics

(T_C = 25 °C unless otherwise specified).

Table 3. Static

Symbol	Parameter	Test conditions	Min.	Typ.	Max.	Unit
$V_{(BR)DSS}$	Drain-source breakdown voltage	V_{GS} = 0 V, I_D = 250 µA	60			V
I_{DSS}	Zero gate voltage drain current	V_{GS} = 0 V, V_{DS} = 60 V			1	µA
		V_{GS} = 0 V, V_{DS} = 60 V, T_C = 125 °C(1)			10	
I_{GSS}	Gate-body leakage current	V_{DS} = 0 V, V_{GS} = ±18 V			±100	nA
$V_{GS(th)}$	Gate threshold voltage	V_{DS} = V_{GS}, I_D = 250 µA	1		2.5	V
$R_{DS(on)}$	Static drain-source on-resistance	V_{GS} = 10 V, I_D = 12 A		32	40	mΩ
		V_{GS} = 5 V, I_D = 12 A			50	

1. *Defined by design, not subject to production test.*

Table 4. Dynamic

Symbol	Parameter	Test conditions	Min.	Typ.	Max.	Unit
g_{fs}	Forward transconductance	V_{DS} = 25 V, I_D = 12 A	-	20	-	S
C_{iss}	Input capacitance	V_{DS} = 25 V, f = 1 MHz, V_{GS} = 0 V	-	660	-	pF
C_{oss}	Output capacitance		-	170	-	pF
C_{rss}	Reverse transfer capacitance		-	70	-	pF
$t_{d(on)}$	Turn-on delay time	V_{DD} = 30 V, I_D = 10 A, R_G = 4.7 Ω, V_{GS} = 10 V (see Figure 11. Test circuit for resistive load switching times)	-	11	-	ns
t_r	Rise time		-	50	-	ns
$t_{d(off)}$	Turn-off delay time		-	20	-	ns
t_f	Fall time		-	12	-	ns
Q_g	Total gate charge	V_{DD} = 30 V, I_D = 20 A, V_{GS} = 10 V, R_G = 4.7 Ω (see Figure 12. Test circuit for gate charge behavior)	-	13	-	nC
Q_{gs}	Gate-source charge		-	3.5	-	nC
Q_{gd}	Gate-drain charge		-	8	-	nC

Table 5. Source-drain diode

Symbol	Parameter	Test conditions	Min.	Typ.	Max.	Unit
I_{SD}	Source-drain current		-		24	A
I_{SDM}(1)	Source-drain current (pulsed)		-		96	A
V_{SD}(2)	Forward on voltage	V_{GS} = 0 V, I_{SD} = 20 A	-		1.5	V
t_{rr}	Reverse recovery time	I_{SD} = 20 A, di/dt = 100 A/µs,	-	56		ns
Q_{rr}	Reverse recovery charge	V_{DD} = 20 V, T_J = 150 °C	-	108		nC
I_{RRM}	Reverse recovery current	(see Figure 13. Test circuit for inductive load switching and diode recovery times)	-	4		A

1. *Pulse width is limited by safe operating area.*
2. *Pulse test: pulse duration = 300 µs, duty cycle 1.5%.*

2.1 Electrical characteristics (curves)

Figure 1. Safe operating area

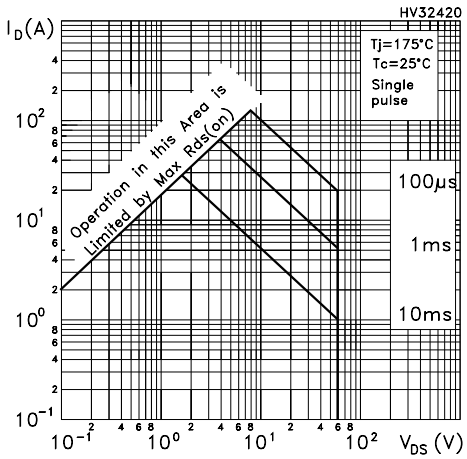

Figure 2. Thermal impedance

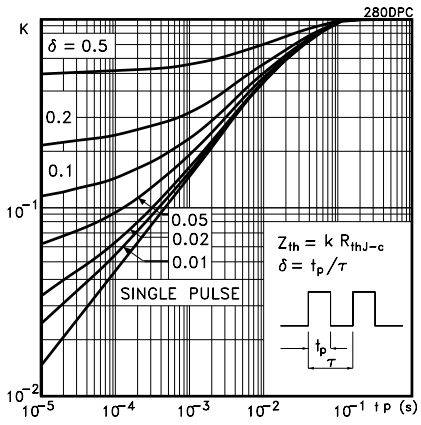

Figure 3. Output characteristics

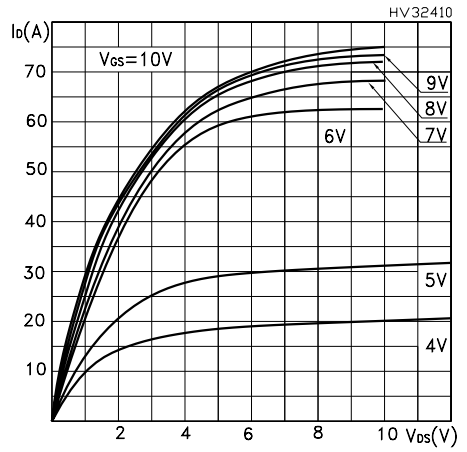

Figure 4. Transfer characteristics

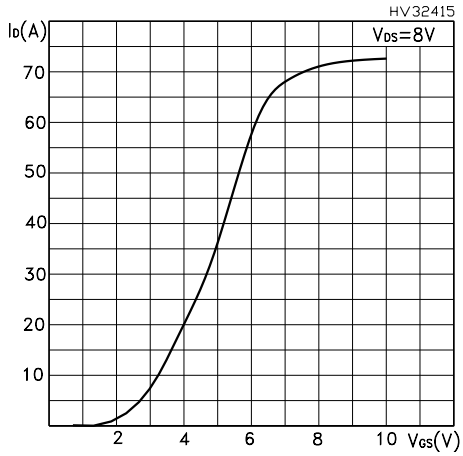

Figure 5. Static drain-source on-resistance

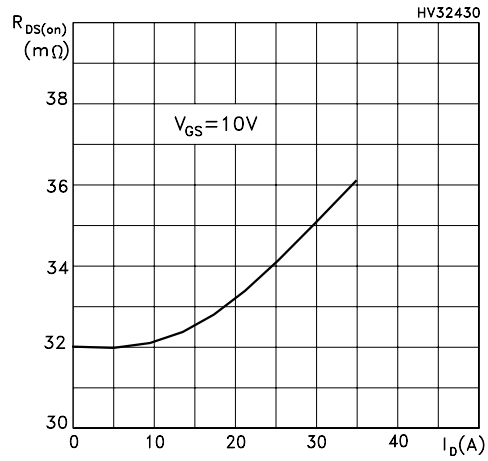

Figure 6. Gate charge vs gate-source voltage

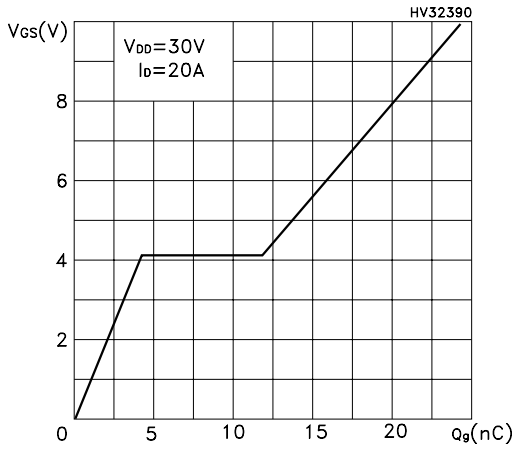

Figure 7. Capacitance variations

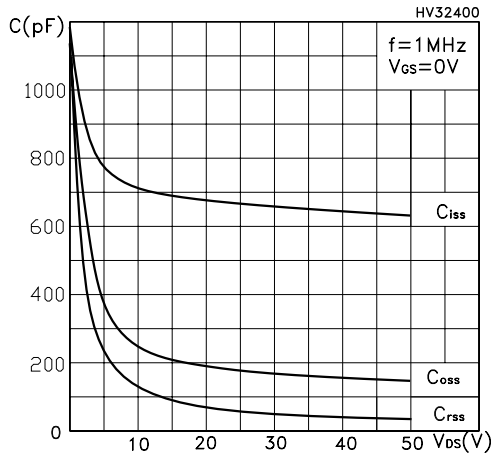

Figure 8. Normalized gate threshold voltage vs temperature

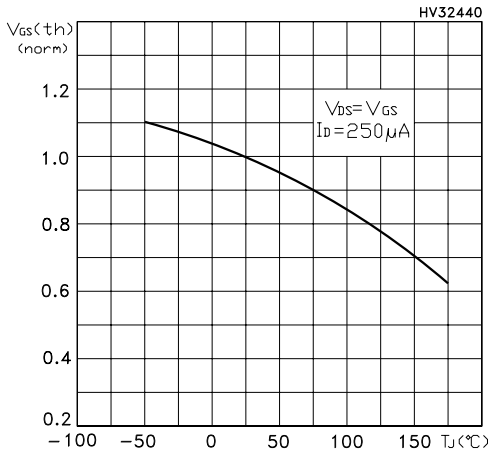

Figure 9. Normalized on-resistance vs temperature

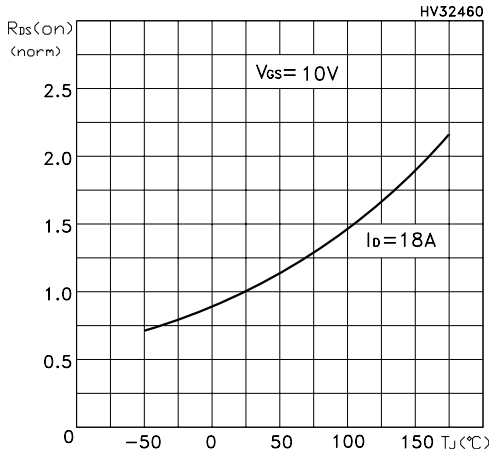

Figure 10. Normalized $V_{(BR)DSS}$ vs temperature

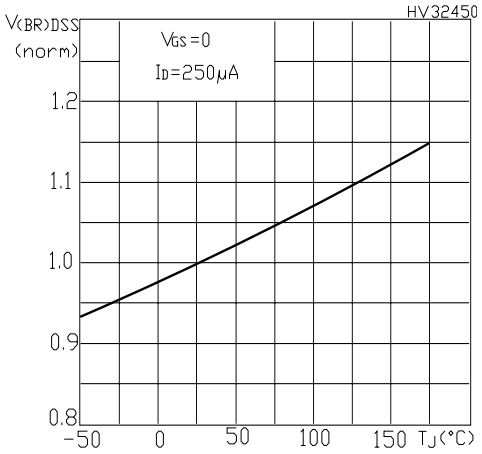

3 Test circuits

Figure 11. Test circuit for resistive load switching times

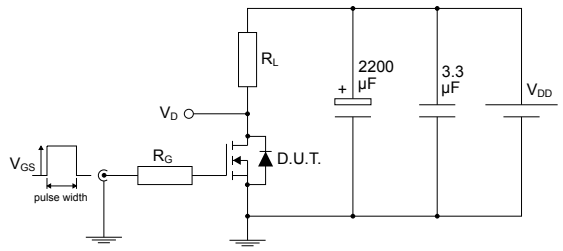

AM01468v1

Figure 12. Test circuit for gate charge behavior

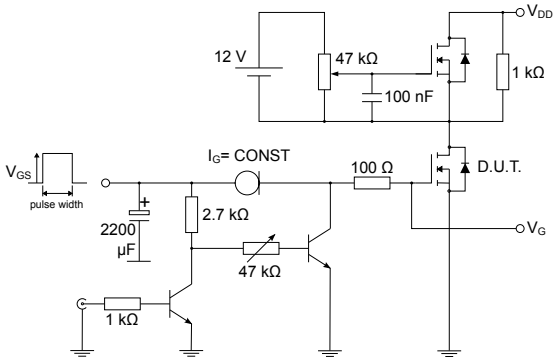

AM01469v1

Figure 13. Test circuit for inductive load switching and diode recovery times

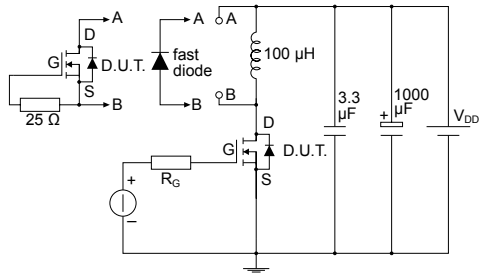

AM01470v1

Figure 14. Unclamped inductive load test circuit

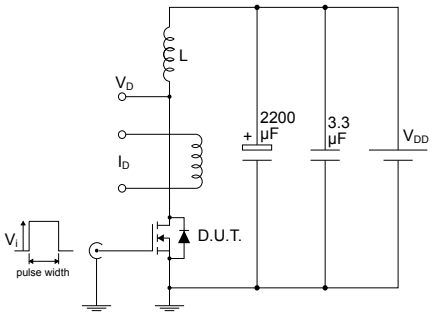

AM01471v1

Figure 15. Unclamped inductive waveform

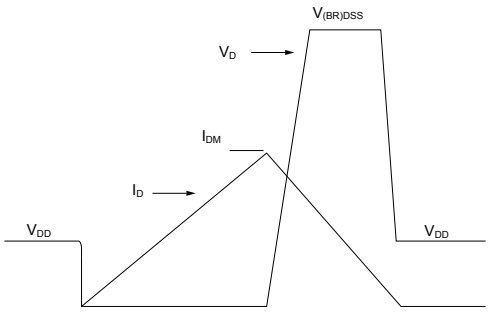

AM01472v1

Figure 16. Switching time waveform

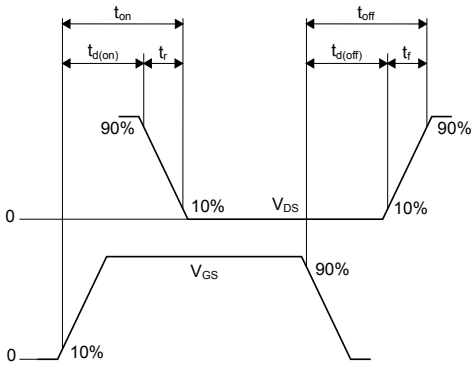

AM01473v1

4 Package information

In order to meet environmental requirements, ST offers these devices in different grades of ECOPACK packages, depending on their level of environmental compliance. ECOPACK specifications, grade definitions and product status are available at: www.st.com. ECOPACK is an ST trademark.

4.1 DPAK (TO-252) package information

Figure 17. DPAK (TO-252) type A package outline

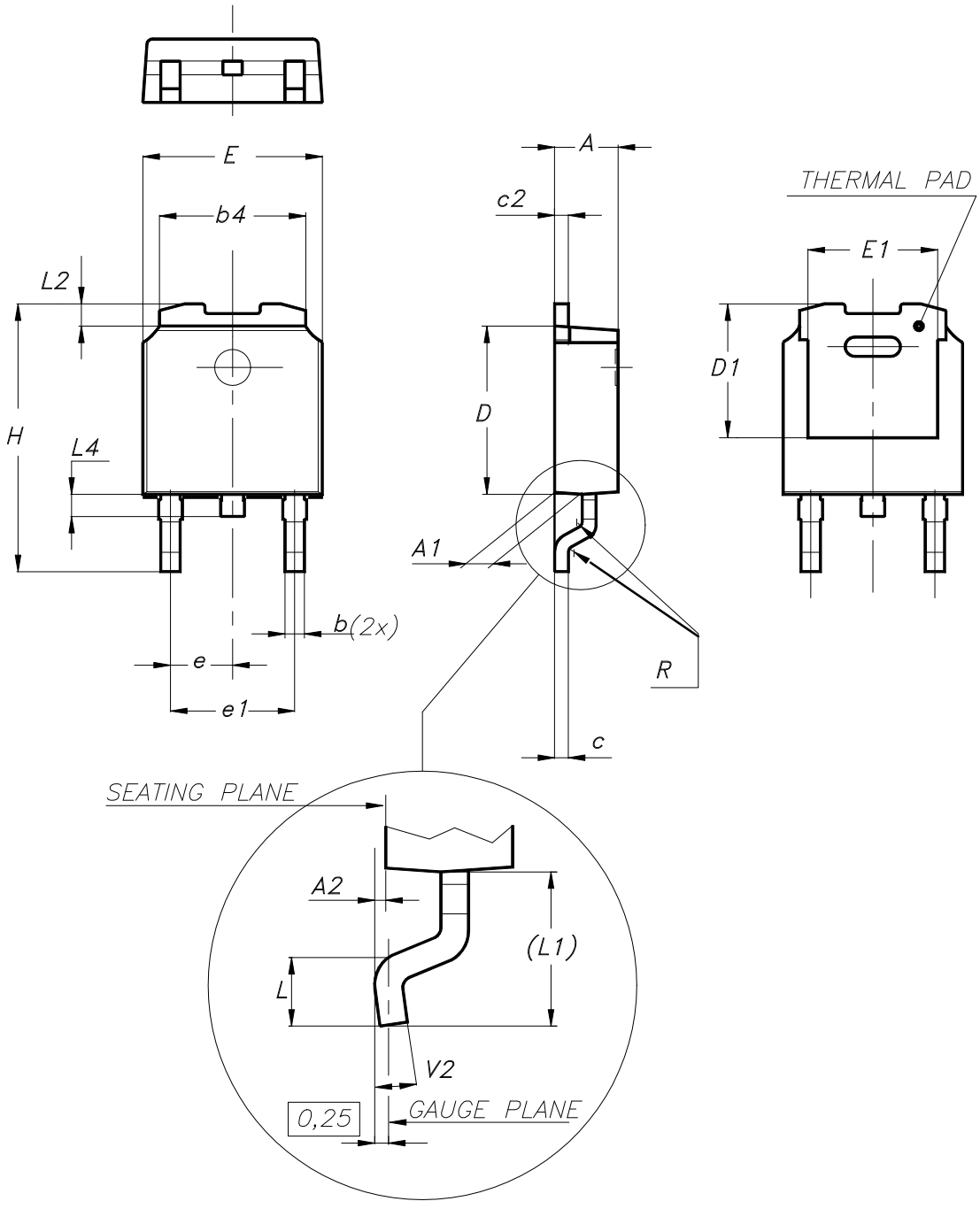

0068772_A_30

Table 6. **DPAK (TO-252) type A mechanical data**

Dim.	mm		
	Min.	Typ.	Max.
A	2.20		2.40
A1	0.90		1.10
A2	0.03		0.23
b	0.64		0.90
b4	5.20		5.40
c	0.45		0.60
c2	0.48		0.60
D	6.00		6.20
D1	4.95	5.10	5.25
E	6.40		6.60
E1	4.60	4.70	4.80
e	2.159	2.286	2.413
e1	4.445	4.572	4.699
H	9.35		10.10
L	1.00		1.50
(L1)	2.60	2.80	3.00
L2	0.65	0.80	0.95
L4	0.60		1.00
R		0.20	
V2	0°		8°

Figure 18. **DPAK (TO-252) recommended footprint (dimensions are in mm)**

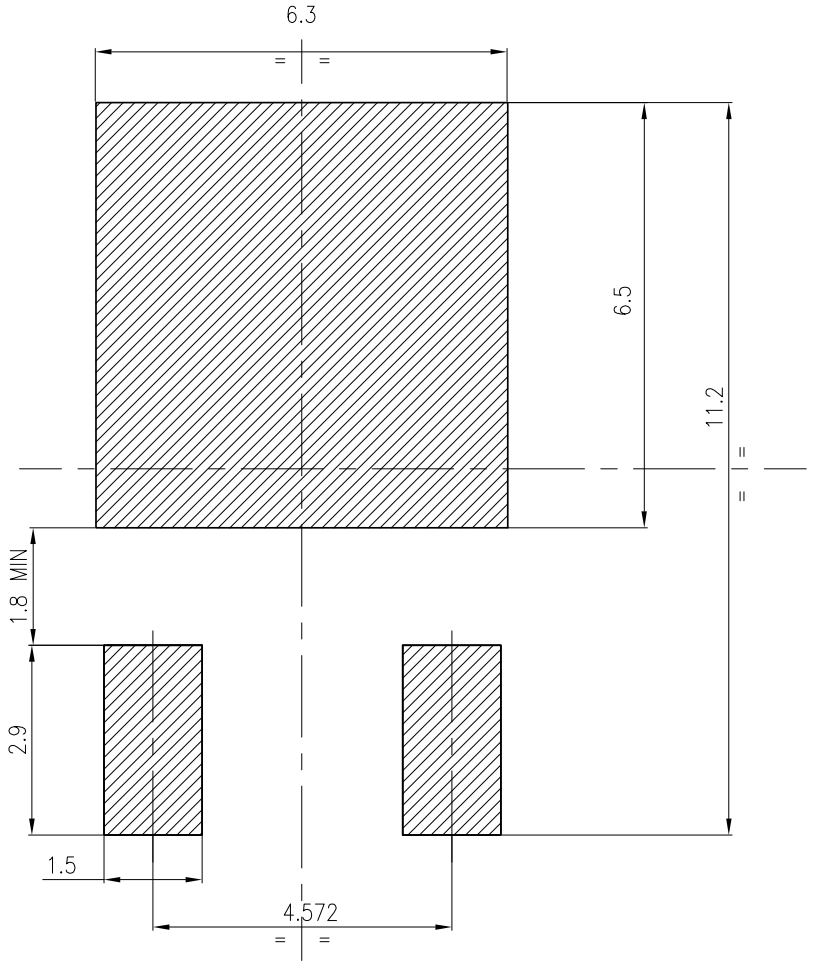

4.2 DPAK (TO-252) packing information

Figure 19. **DPAK (TO-252) tape outline**

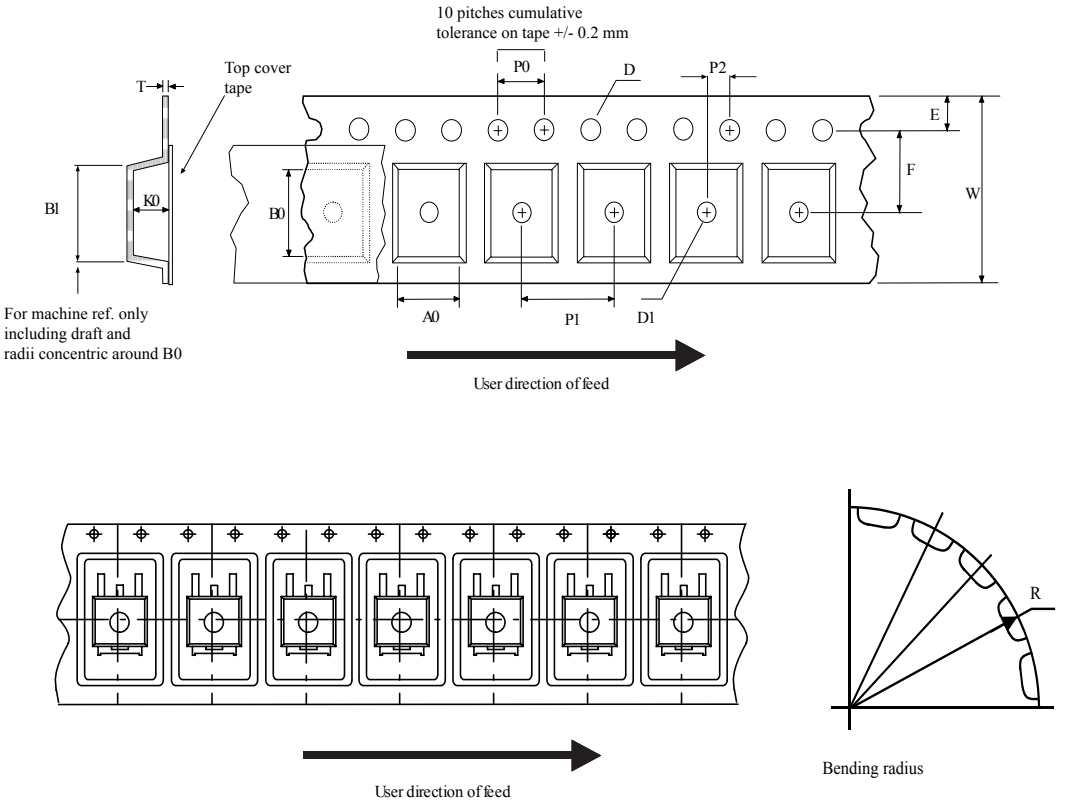

Figure 20. **DPAK (TO-252) reel outline**

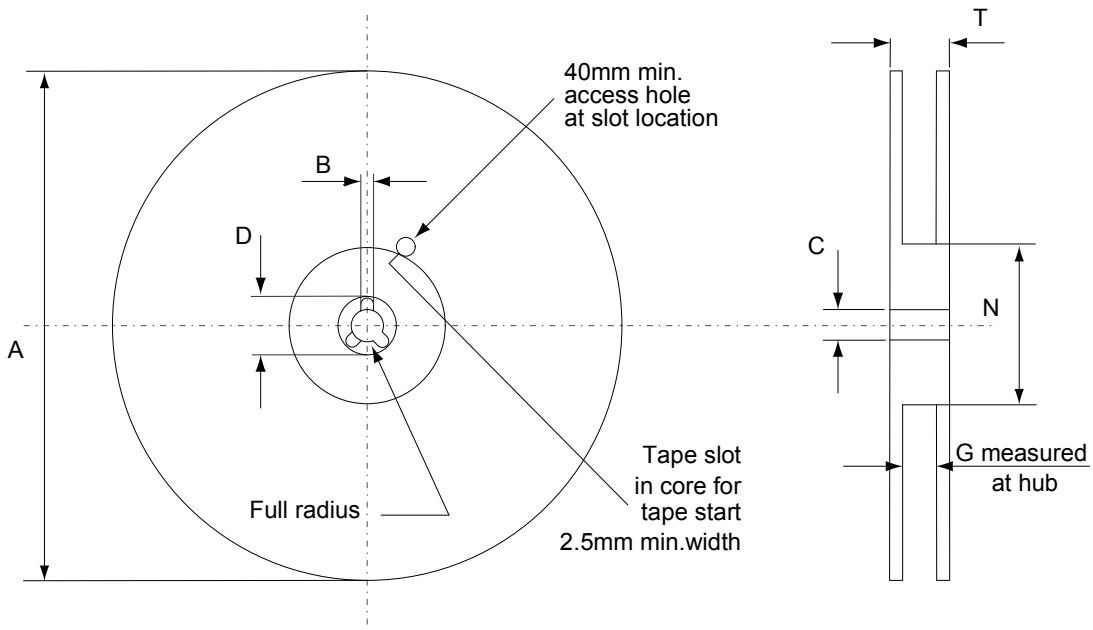

AM06038v1

Table 7. **DPAK (TO-252) tape and reel mechanical data**

Tape			Reel		
Dim.	mm		Dim.	mm	
	Min.	Max.		Min.	Max.
A0	6.8	7	A		330
B0	10.4	10.6	B	1.5	
B1		12.1	C	12.8	13.2
D	1.5	1.6	D	20.2	
D1	1.5		G	16.4	18.4
E	1.65	1.85	N	50	
F	7.4	7.6	T		22.4
K0	2.55	2.75			
P0	3.9	4.1	Base qty.		2500
P1	7.9	8.1	Bulk qty.		2500
P2	1.9	2.1			
R	40				
T	0.25	0.35			
W	15.7	16.3			

Revision history

Table 8. **Document revision history**

Date	Revision	Changes
19-Apr-2005	2	Added package IPAK
08-Jun-2006	3	Graphical updates
03-Jul-2006	4	New template, no content change
29-Apr-2022	5	The part number STD20NF06L-1 has been removed and the document has been updated accordingly.

Contents

1 **Electrical ratings** 2

2 **Electrical characteristics** 3

2.1 Electrical characteristics (curves) 5

3 **Test circuits** 7

4 **Package information** 8

4.1 DPAK (TO-252) package information 8

4.2 DPAK (TO-252) packing information 11

Revision history 13

IMPORTANT NOTICE – READ CAREFULLY

STMicroelectronics NV and its subsidiaries (“ST”) reserve the right to make changes, corrections, enhancements, modifications, and improvements to ST products and/or to this document at any time without notice. Purchasers should obtain the latest relevant information on ST products before placing orders. ST products are sold pursuant to ST’s terms and conditions of sale in place at the time of order acknowledgment.

Purchasers are solely responsible for the choice, selection, and use of ST products and ST assumes no liability for application assistance or the design of purchasers’ products.

No license, express or implied, to any intellectual property right is granted by ST herein.

Resale of ST products with provisions different from the information set forth herein shall void any warranty granted by ST for such product.

ST and the ST logo are trademarks of ST. For additional information about ST trademarks, refer to www.st.com/trademarks. All other product or service names are the property of their respective owners.

Information in this document supersedes and replaces information previously supplied in any prior versions of this document.

© 2022 STMicroelectronics – All rights reserved