ESDA6V1-5SC6

ASD™ TRANSIL™ ARRAY FOR ESD PROTECTION

MAIN APPLICATIONS

Where transient overvoltage protection in ESD sensitive equipment is required, such as:

- Computers
- Printers
- Communication systems
- Cellular phone handsets and accessories
- Other telephone set
- Set top boxes

FEATURES

- 5 Unidirectional Transil™ Functions
- Low leakage current: I_R max. < 1µA
- Breakdown voltage: V_{BR} = 6.1V min.

DESCRIPTION

The ESDA6V1-5SC6 is a 5-bit wide monolithic suppressor which is designed to protect against ESD components connected to data and transmission lines.

BENEFITS

- High integration
- Suitable for high density boards

COMPLIES WITH THE FOLLOWING STANDARDS:

		Test kV	Max. current
IEC61000-4-2 level 4	Air	15	-
	Contact	8	30A
MIL STD 883C-Method 3015-7 class3 (Human Body Model)	Contact	> 4	> 2.67A

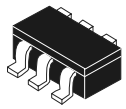

SOT23-6L (SC-59)

Table 1: Order Code

Part Number	Marking
ESDA6V1-5SC6	EC62

Figure 1: Functional Diagram

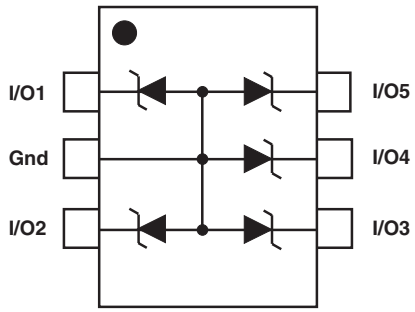

Figure 2: ESD response to IEC61000-4-2 (air discharge 16kV, positive surge)

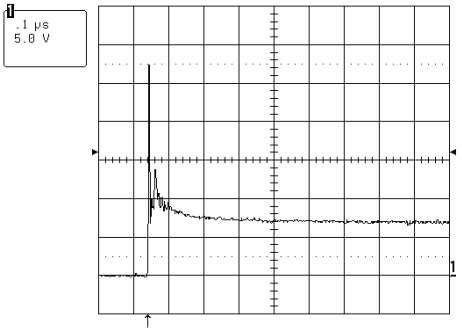

TM: ASD is a trademark of STMicroelectronics.

Table 2: Absolute Maximum Ratings (T_{amb} = 25°C)

Symbol	Parameter		Value	Unit
V_{PP}	ESD discharge	MIL STD 883E - Method 3015-7 IEC61000-4-2 air discharge IEC61000-4-2 contact discharge	25 20 15	kV
P_{PP}	Peak pulse power (8/20µs)		100	W
T_j	Junction temperature		150	°C
T_{stg}	Storage temperature range		-55 to +150	°C
T_L	Maximum lead temperature for soldering during 10 s at 5mm for case		260	°C
T_{op}	Operating temperature range (note 1)		-40 to +125	°C

Note 1: The evolution of the operating parameters versus temperature is given by curves and αT parameter.

Table 3: Electrical Characteristics (T_{amb} = 25°C)

Symbol	Parameter
V_{RM}	Stand-off voltage
V_{BR}	Breakdown voltage
V_{CL}	Clamping voltage
I_{RM}	Leakage current
I_{PP}	Peak pulse current
αT	Voltage temperature coefficient
V_F	Forward voltage drop
C	Capacitance
R_d	Dynamic resistance

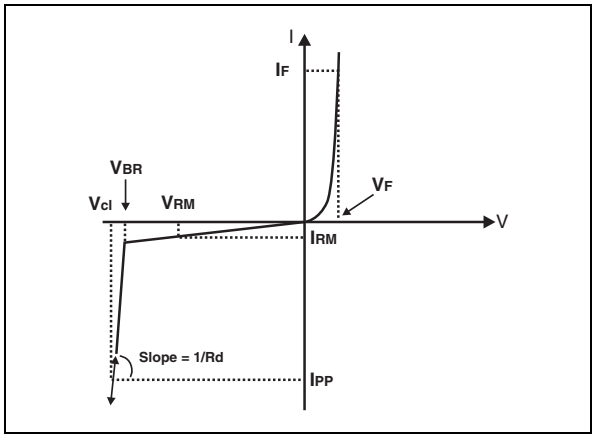

Type	V_{BR} @ I_R			I_{RM} @ V_{RM}		R_d	αT	C	V_F @ I_F	
	min.	max.		max.		typ. note 2	max. note 3	typ. 0V bias	max.	
	V	V	mA	µA	V	mΩ	10^{-4}/°C	pF	V	mA
ESDA6V1-5SC6	6.1	7.2	1	1	3	590	6	50	1.25	200

Note 2: Square pulse, I_{PP} = 15A, t_p=2.5µs.

Note 3: $\Delta V_{BR} = \alpha T^* (T_{amb} - 25°C) * V_{BR}$ (25°C).

Figure 3: Peak power dissipation versus initial junction temperature

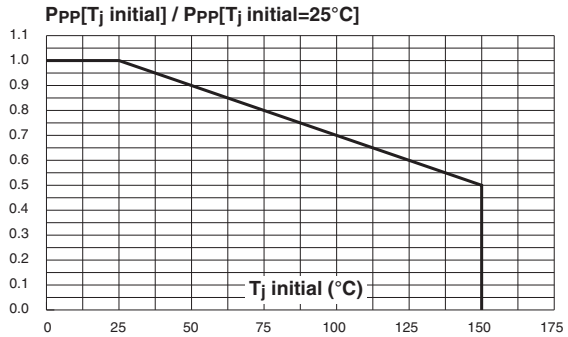

Figure 4: Peak pulse power versus exponential pulse duration (T_j initial = 25 °C)

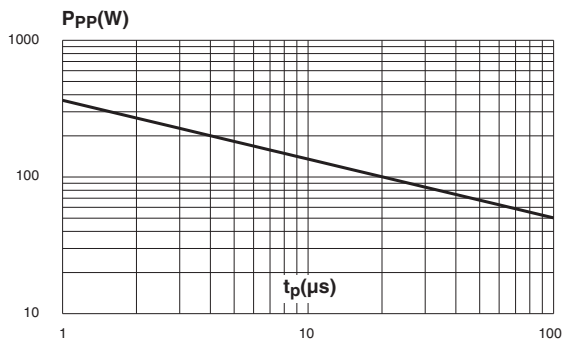

Figure 5: Clamping voltage versus peak pulse current (T_j initial = 25 °C). Rectangular waveform (t_p = 2.5 µs)

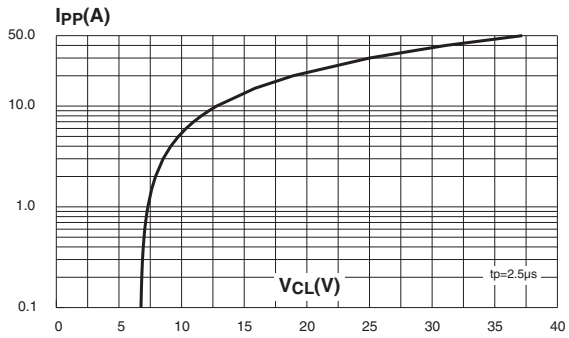

Figure 6: Capacitance versus reverse applied voltage (typical values)

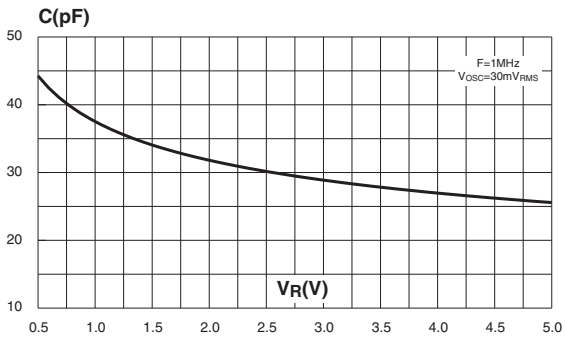

Figure 7: Relative variation of leakage current versus junction temperature (typical values)

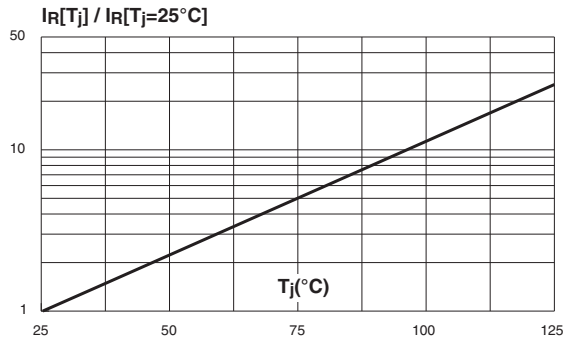

Figure 8: Peak forward voltage drop versus peak forward current (typical values)

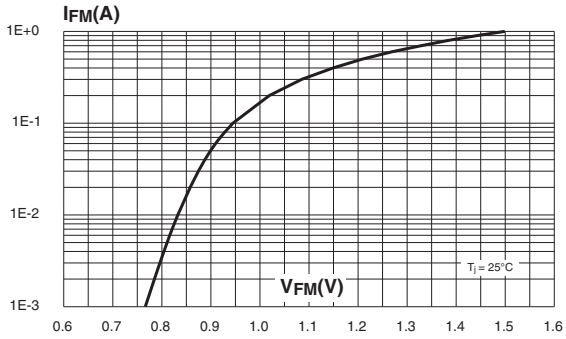

Figure 9: Ordering information scheme

ESDA 6V1 - 5 SC6

ESD Array

Breakdown Voltage (min)
6V1 = 6.1 Volt

Number of lines protected
5 = 5 lines

Package
SC6 = SOT23-6L

Figure 10: SOT23-6L Package Mechanical Data

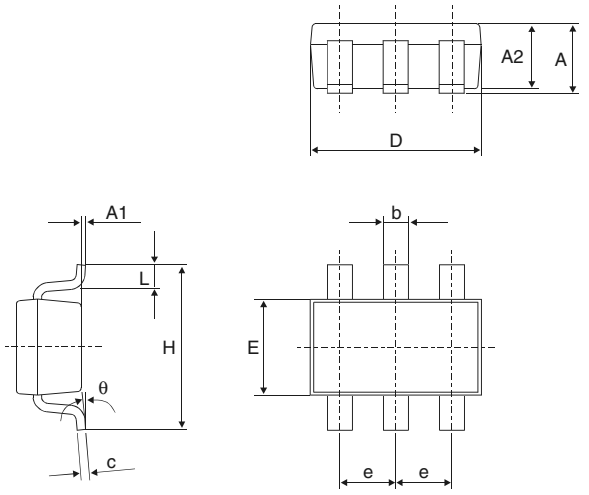

REF.	DIMENSIONS					
	Millimeters			Inches		
	Min.	Typ.	Max.	Min.	Typ.	Max.
A	0.90		1.45	0.035		0.057
A1	0		0.10	0		0.004
A2	0.90		1.30	0.035		0.051
b	0.35		0.50	0.014		0.02
C	0.09		0.20	0.004		0.008
D	2.80		3.05	0.110		0.120
E	1.50		1.75	0.059		0.069
e		0.95			0.037	
H	2.60		3.00	0.102		0.118
L	0.10		0.60	0.004		0.024
θ			10°			10°

Figure 11: Foot Print Dimensions (in millimeters)

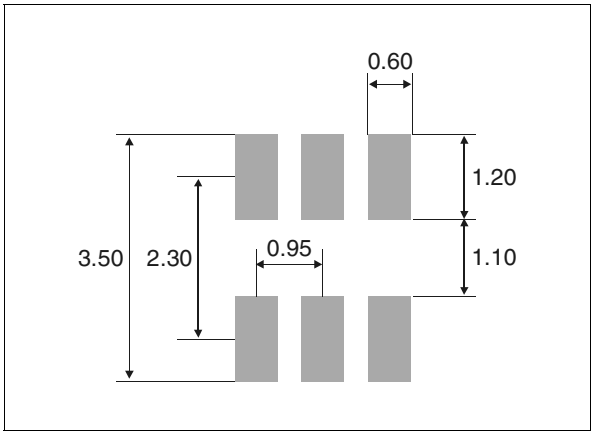

Table 4: Ordering Information

Part Number	Marking	Package	Weight	Base qty	Delivery mode
ESDA6V1-5SC6	EC62	SOT23-6L	16.7 mg	3000	Tape & reel

Table 5: Revision History

Date	Revision	Description of Changes
Feb-2002	2B	Last update.
4-Nov-2004	3	SOT23-6L package dimensions change for reference “D” from 3.0 millimeters (0.118 inches) to 3.05 millimeters (0.120 inches).

Information furnished is believed to be accurate and reliable. However, STMicroelectronics assumes no responsibility for the consequences of use of such information nor for any infringement of patents or other rights of third parties which may result from its use. No license is granted by implication or otherwise under any patent or patent rights of STMicroelectronics. Specifications mentioned in this publication are subject to change without notice. This publication supersedes and replaces all information previously supplied. STMicroelectronics products are not authorized for use as critical components in life support devices or systems without express written approval of STMicroelectronics.

The ST logo is a registered trademark of STMicroelectronics.
All other names are the property of their respective owners

© 2004 STMicroelectronics - All rights reserved

STMicroelectronics group of companies
Australia - Belgium - Brazil - Canada - China - Czech Republic - Finland - France - Germany - Hong Kong - India - Israel - Italy - Japan - Malaysia - Malta - Morocco - Singapore - Spain - Sweden - Switzerland - United Kingdom - United States of America
www.st.com