STB16PF06L

P-CHANNEL 60V - 0.11Ω - 16A D2PAK
STripFET™ MOSFET

Table 1: General Features

TYPE	V_{DSS}	$R_{DS(on)}$	I_D	Pw
STB16PF06L	60 V	< 0.125 Ω	16 A	70 W

- TYPICAL R_{DS}(on) = 0.11 Ω
- LOW THRESHOLD DEVICE
- LOW GATE CHARGE

DESCRIPTION

This MOSFET is the latest development of STMicroelectronics unique "Single Feature Size™" strip-based process. The resulting transistor shows extremely high packing density for low on-resistance, rugged avalance characteristics and less critical alignment steps therefore a remarkable manufacturing reproducibility.

APPLICATIONS

- MOTOR CONTROL
- DC-DC CONVERTERS

Figure 1: Package

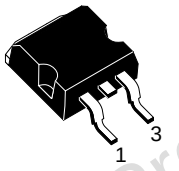

D^2PAK
TO-263

Figure 2: Internal Schematic Diagram

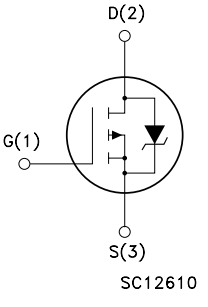

Table 2: Order Codes

PART NUMBER	MARKING	PACKAGE	PACKAGING
STB16PF06LT4	B16PF06L	D^2PAK	TAPE & REEL

Obsolete Product(s) - Obsolete Product(s)
Obsolete Product(s) - Obsolete Product(s)

Table 3: Absolute Maximum ratings

Symbol	Parameter	Value	Unit
V_{DS}	Drain-source Voltage (V_{GS} = 0)	60	V
V_{DGR}	Drain-gate Voltage (R_{GS} = 20 kΩ)	60	V
V_{GS}	Gate-source Voltage	± 16	V
I_D	Drain Current (continuous) at T_C = 25°C	16	A
I_D	Drain Current (continuous) at T_C = 100°C	11.4	A
I_{DM} (•)	Drain Current (pulsed)	64	A
P_{TOT}	Total Dissipation at T_C = 25°C	70	W
	Derating Factor	0.4	W/°C
dv/dt (1)	Peak Diode Recovery voltage slope	20	V/ns
E_{AS} (2)	Single Pulse Avalanche Energy	250	mJ
T_j T_{stg}	Operating Junction Temperature Storage Temperature	- 55 to 175	°C

(•) Pulse width limited by safe operating area
(1) I_{SD} ≤16A, di/dt ≤100A/µs, V_{DD} ≤ $V_{(BR)DSS}$, T_j ≤ T_{JMAX}.
(2) Starting T_j = 25°C , I_D = 8 A , V_{DD} = 30 V
Note:For the P-CHANNEL MOSFET actual polarity of voltages and current has to be reverse

Table 4: Thermal Data

Rthj-case	Thermal Resistance Junction-case Max	2.14	°C/W
Rthj-PCB(#)	Thermal Resistance Junction-PCB Max	34	°C/W
T_l	Maximum Lead Temperature For Soldering Purpose (1.6 mm frrom case, for 10sec)	300	°C

(#) When Mounted on 1 inch^2 FR-4 board, 2 oz of Cu

ELECTRICAL CHARACTERISTICS (T_{CASE} =25°C UNLESS OTHERWISE SPECIFIED)

Table 5: On/Off

Symbol	Parameter	Test Conditions	Min.	Typ.	Max.	Unit
$V_{(BR)DSS}$	Drain-source Breakdown Voltage	I_D = 250µA, V_{GS} = 0	60			V
I_{DSS}	Zero Gate Voltage Drain Current (V_{GS} = 0)	V_{DS} = Max Rating V_{DS} = Max Rating, T_C = 125 °C			1 10	µA µA
I_{GSS}	Gate-body Leakage Current (V_{DS} = 0)	V_{GS} = ± 16V			±100	nA
$V_{GS(th)}$	Gate Threshold Voltage	V_{DS} = V_{GS}, I_D = 100µA	1.5			V
$R_{DS(on)}$	Static Drain-source On Resistance	V_{GS} = 10V, I_D = 8 A V_{GS} = 5V, I_D = 8 A		0.11 0.130	0.125 0.165	Ω Ω

Obsolete Product(s) - Obsolete Product(s)

ELECTRICAL CHARACTERISTICS (CONTINUED)

Table 6: Dynamic

Symbol	Parameter	Test Conditions	Min.	Typ.	Max.	Unit
g_{fs}	Forward Transconductance	V_{DS} = 10 V, I_D = 3 A		7.2		S
C_{iss} C_{oss} C_{rss}	Input Capacitance Output Capacitance Reverse Transfer Capacitance	V_{DS} = 25V, f = 1 MHz, V_{GS} = 0		630 121 49		pF pF pF
$t_{d(on)}$ t_r $t_{d(off)}$ t_f	Turn-on Delay Time Rise Time Turn-off Delay Time Fall Time	V_{DD} = 30 V, I_D = 8 A, R_G = 4.7Ω V_{GS} = 4.5 V (Resistive Load , Figure 1)		129 90 25.5 19.5		ns ns ns ns
Q_g Q_{gs} Q_{gd}	Total Gate Charge Gate-Source Charge Gate-Drain Charge	V_{DD} = 48 V, I_D = 16 A, V_{GS} = 4.5V (See test circuit, Figure 2)		11.4 5.2 4.7	15.5	nC nC nC

Table 7: Source Drain Diode

Symbol	Parameter	Test Conditions	Min.	Typ.	Max.	Unit
I_{SD} I_{SDM} (2)	Source-drain Current Source-drain Current (pulsed)				16 64	A A
V_{SD} (1)	Forward On Voltage	I_{SD} = 8 A, V_{GS} = 0			1.3	V
t_{rr} Q_{rr} I_{RRM}	Reverse Recovery Time Reverse Recovery Charge Reverse Recovery Current	I_{SD} = 16 A, di/dt = 100A/µs V_{DD} = 20V, T_j = 150°C (see test circuit, Figure 3)		48.5 87.3 3.6		ns nC A

Note: 1. Pulsed: Pulse duration = 300 µs, duty cycle 1.5 %.
2. Pulse width limited by safe operating area.

Obsolete Product(s) - Obsolete Product(s)
Obsolete Product(s) - Obsolete Product(s)

Figure 3: Safe Operating Area

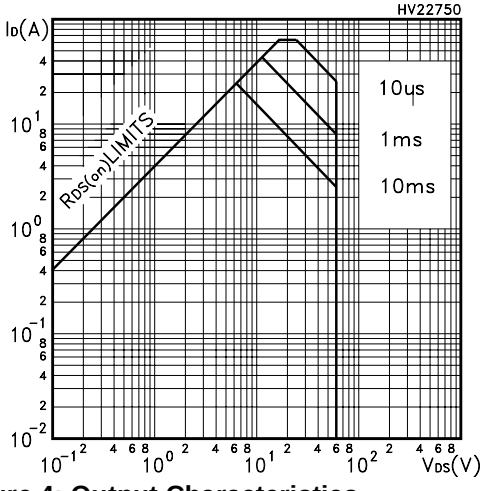

Figure 4: Output Characteristics

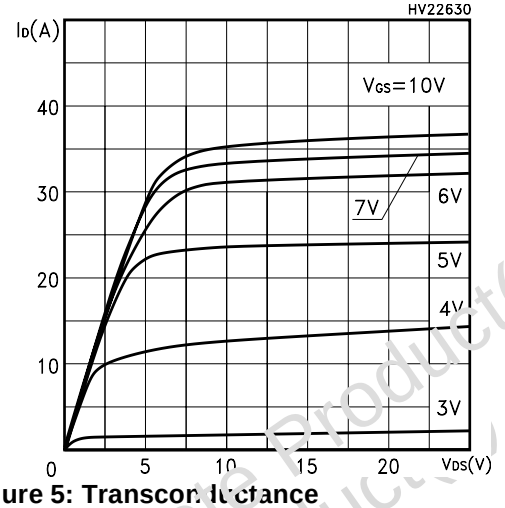

Figure 5: Transconductance

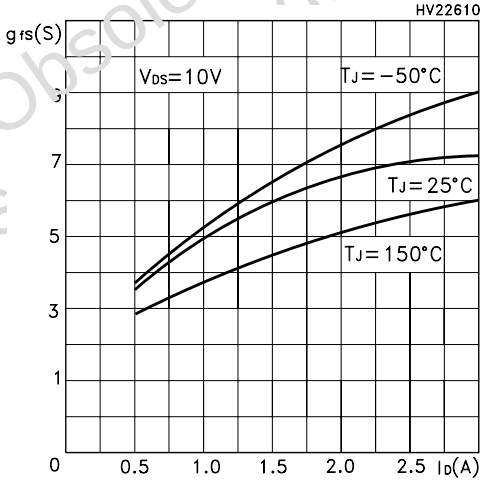

Figure 6: Thermal Impedance

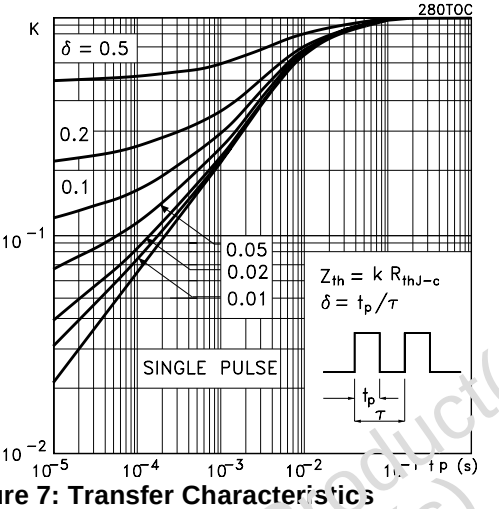

Figure 7: Transfer Characteristics

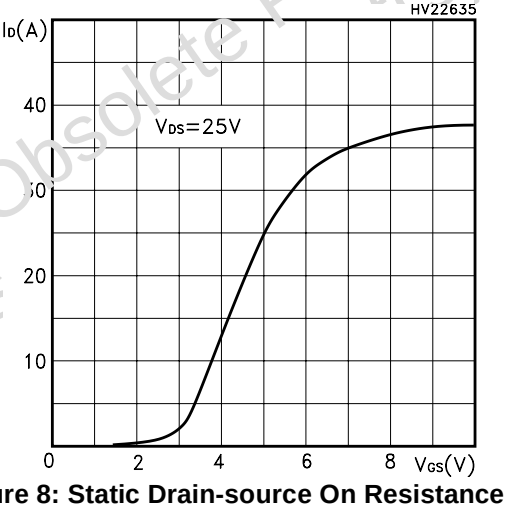

Figure 8: Static Drain-source On Resistance

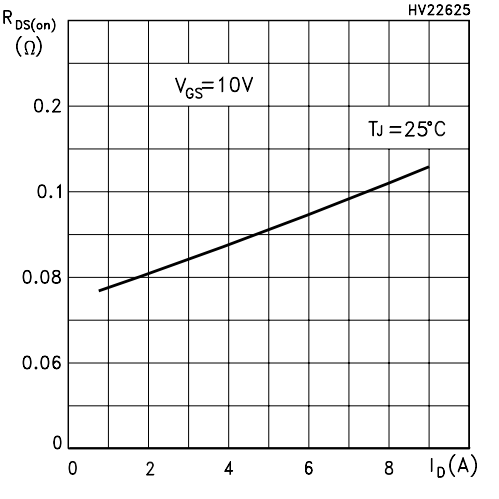

Obsolete Product(s) - Obsolete Product(s)

Figure 9: Gate Charge vs Gate-source Voltage

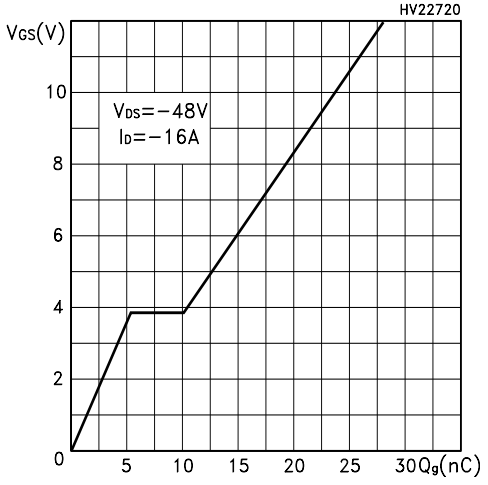

Figure 10: Normalized Gate Thereshold Voltage vs Temperature

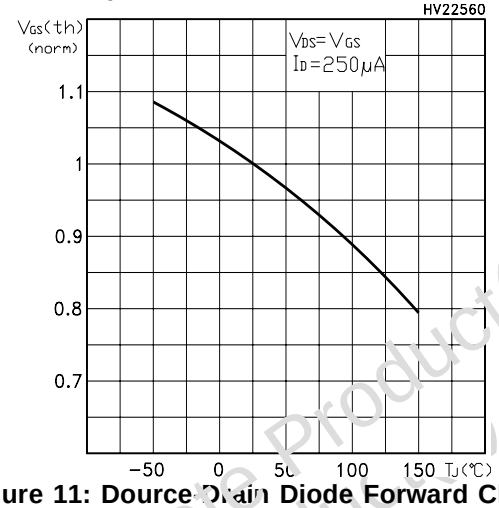

Figure 11: Dource Drain Diode Forward Characteristics

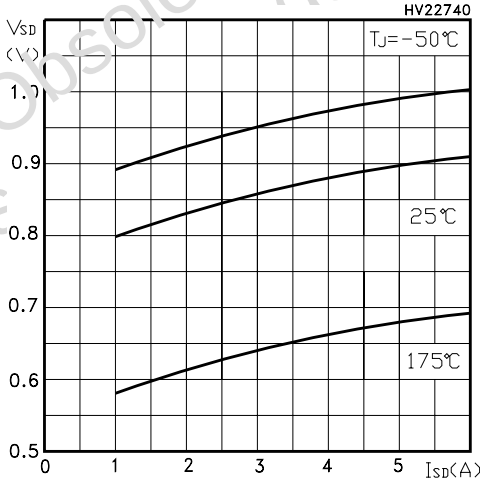

Figure 12: Capacitance Variations

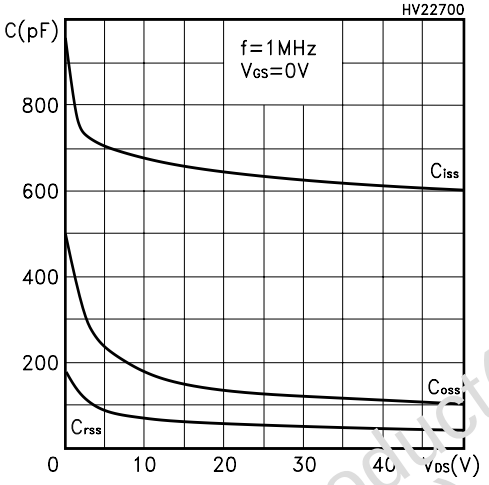

Figure 13: Normalized On Resistance vs Temperature

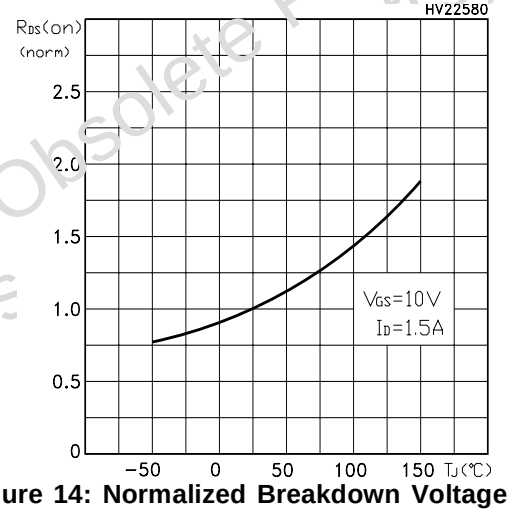

Figure 14: Normalized Breakdown Voltage vs Temperature

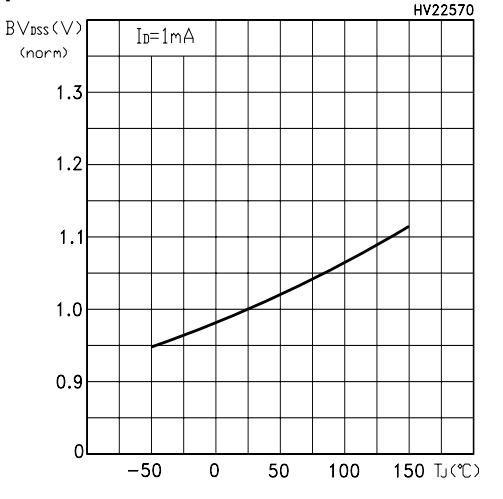

Obsolete Product(s) - Obsolete Product(s)

Figure 15: Unclamped Inductive Load Test Circuit

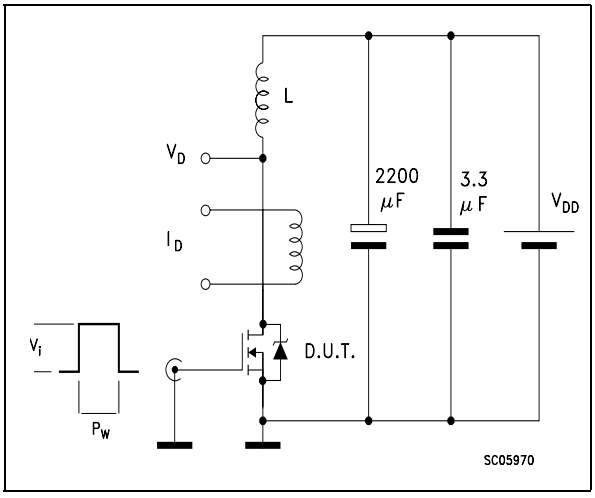

Figure 16: Switching Times Test Circuit For Resistive Load

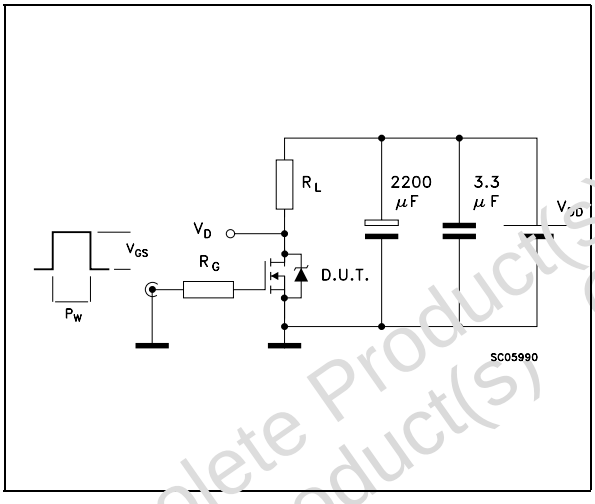

Figure 17: Test Circuit For Inductive Load Switching and Diode Recovery Times

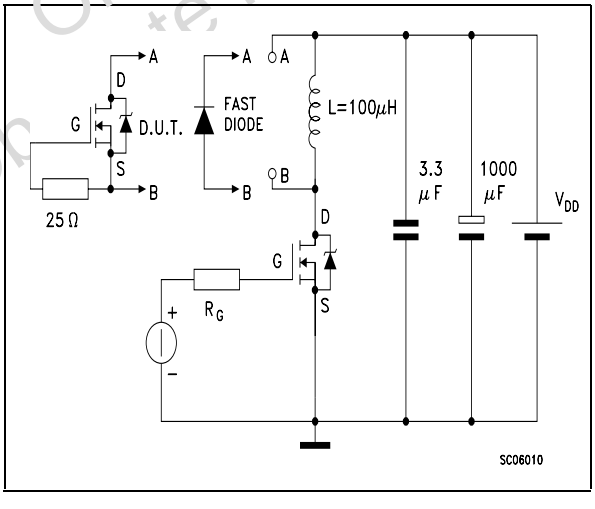

Figure 18: Unclamped Inductive Wafeform

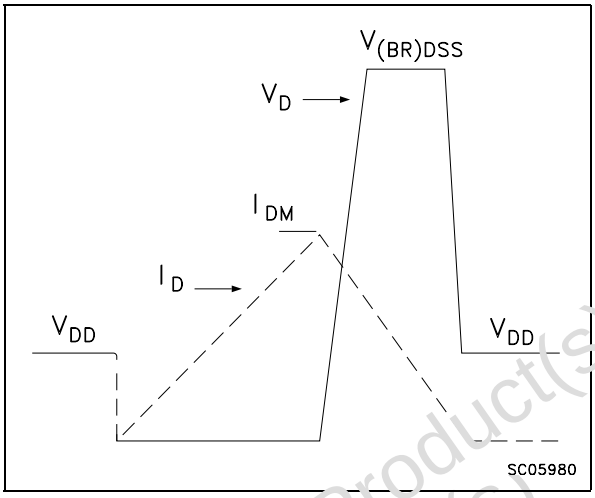

Figure 19: Gate Charge Test Circuit

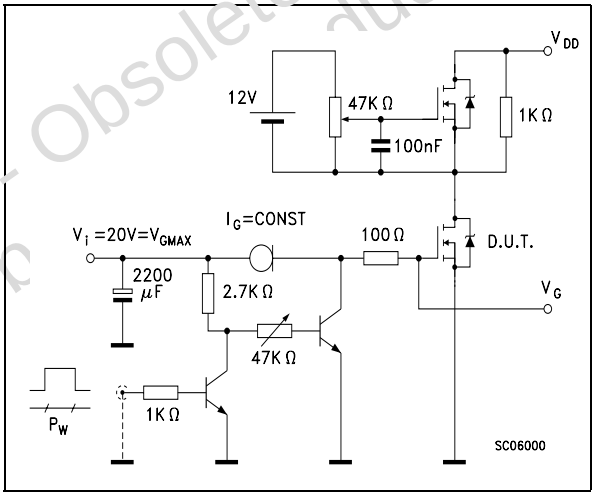

Obsolete Product(s) - Obsolete Product(s)

D²PAK MECHANICAL DATA

DIM.	mm.			inch		
	MIN.	TYP	MAX.	MIN.	TYP.	MAX.
A	4.4		4.6	0.173		0.181
A1	2.49		2.69	0.098		0.106
A2	0.03		0.23	0.001		0.009
B	0.7		0.93	0.027		0.036
B2	1.14		1.7	0.044		0.067
C	0.45		0.6	0.017		0.023
C2	1.23		1.36	0.048		0.053
D	8.95		9.35	0.352		0.368
D1		8			0.315	
E	10		10.4	0.393		
E1		8.5			0.334	
G	4.88		5.28	0.192		0.208
L	15		15.85	0.590		0.625
L2	1.27		1.4	0.050		0.055
L3	1.4		1.75	0.055		0.068
M	2.4		3.2	0.094		0.126
R		0.4			0.015	
V2	0°		4°			

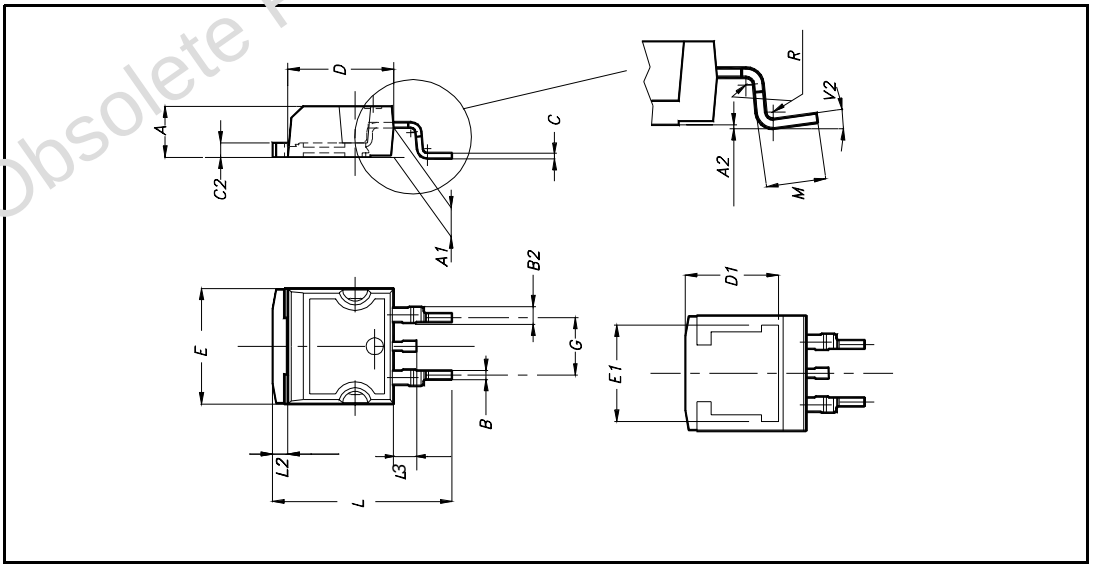

Obsolete Product(s) - Obsolete Product(s)

D^2PAK FOOTPRINT

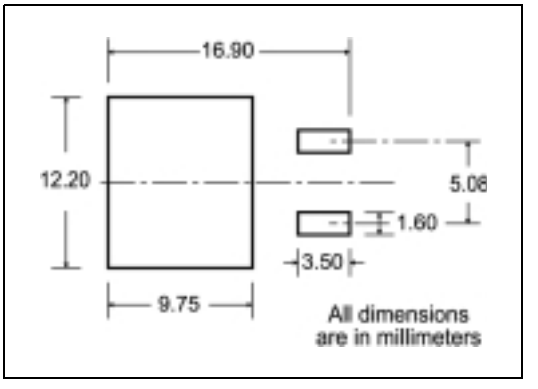

TUBE SHIPMENT (no suffix)*

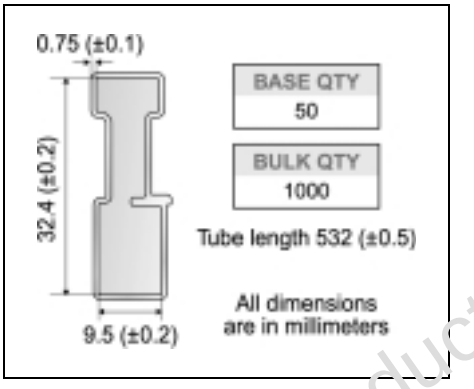

TAPE AND REEL SHIPMENT (suffix "T4")*

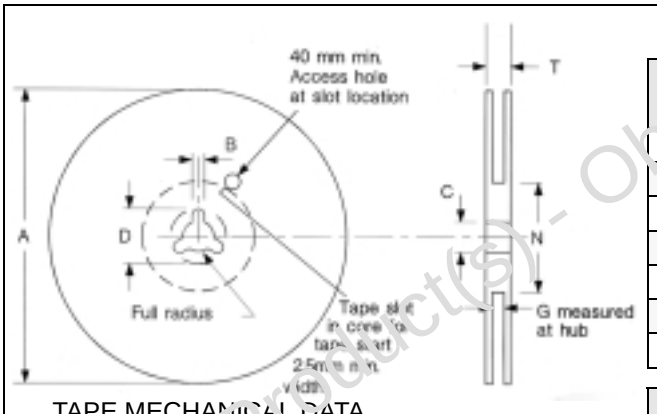

REEL MECHANICAL DATA

DIM.	mm		inch	
	MIN.	MAX.	MIN.	MAX.
A		330		12.992
B	1.5		0.059	
C	12.8	13.2	0.504	0.520
D	20.2		0795	
G	24.4	26.4	0.960	1.039
N	100		3.937	
T		30.4		1.197

BASE QTY	BULK QTY
1000	1000

TAPE MECHANICAL DATA

DIM.	mm		inch	
	MIN.	MAX.	MIN.	MAX.
A0	10.5	10.7	0.413	0.421
B0	15.7	15.9	0.618	0.626
D	1.5	1.6	0.059	0.063
D1	1.59	1.61	0.062	0.063
E	1.65	1.85	0.065	0.073
F	11.4	11.6	0.449	0.456
K0	4.8	5.0	0.189	0.197
P0	3.9	4.1	0.153	0.161
P1	11.9	12.1	0.468	0.476
P2	1.9	2.1	0.075	0.082
R	50		1.574	
T	0.25	0.35	0.0098	0.0137
W	23.7	24.3	0.933	0.956

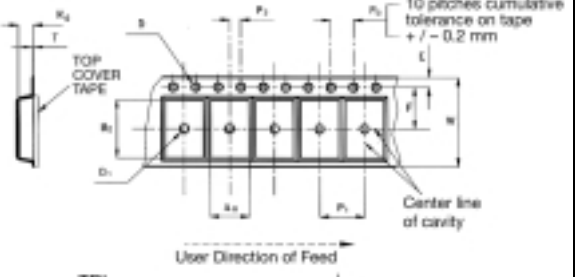

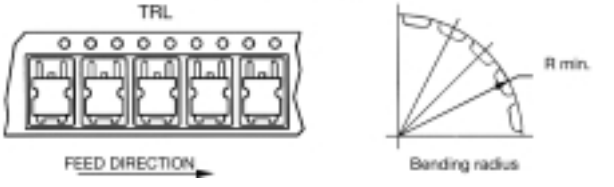

* on sales type

Obsolete Product(s) - Obsolete Product(s)

Table 8: Revision History

Date	Revision	Description of Changes
13/Sep/2004	1	First Release.

Obsolete Product(s) - Obsolete Product(s)
Obsolete Product(s) - Obsolete Product(s)

O' Obsolete Product(s) - Obsolete Product(s)

Information furnished is believed to be accurate and reliable. However, STMicroelectronics assumes no responsibility for the consequences of use of such information nor for any infringement of patents or other rights of third parties which may result from its use. No license is granted by implication or otherwise under any patent or patent rights of STMicroelectronics. Specifications mentioned in this publication are subject to change without notice. This publication supersedes and replaces all information previously supplied. STMicroelectronics products are not authorized for use as critical components in life support devices or systems without express written approval of STMicroelectronics.

The ST logo is a registered trademark of STMicroelectronics

All other names are the property of their respective owners

© 2004 STMicroelectronics - All Rights Reserved

STMicroelectronics group of companies

Australia - Belgium - Brazil - Canada - China - Czech Republic - Finland - France - Germany - Hong Kong - India - Israel - Italy - Japan - Malaysia - Malta - Morocco - Singapore - Spain - Sweden - Switzerland - United Kingdom - United States of America