STS4DPFS30L

P-CHANNEL 30V - 0.045Ω - 5A SO-8
STripFET™ MOSFET PLUS SCHOTTKY RECTIFIER

Table 1: General Features

MOSFET TYPE	V_{DSS}	$R_{DS(on)}$	I_D
STS4DPFS30L	30 V	< 0.055 Ω	5 A
SCHOTTKY	$I_{F(AV)}$	V_{RRM}	$V_{F(MAX)}$
	3 A	30 V	0.51 V

- TYPICAL $R_{DS(on)}$ = 0.045 Ω
- CONDUCTION LOSSES REDUCED
- SWITCHING LOSSES REDUCED
- LOW THRESHOLD DRIVE
- STANDARD OUTLINE FOR EASY AUTOMATED SURFACE MOUNT ASSEMBLY

Figure 1: Package

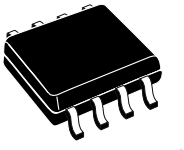

SO-8

DESCRIPTION

This MOSFET is the latest development of STMicroelectronics unique "Single Feature Size™" strip-based process. The resulting transistor shows extremely high packing density for low on-resistance, rugged avalanche characteristics and less critical alignment steps therefore a remarkable manufacturing reproducibility.

Figure 2: Internal Schematic Diagram

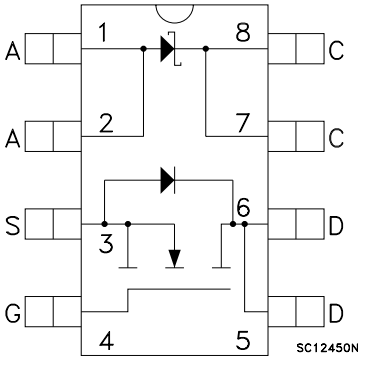

APPLICATIONS

- DC/DC CONVERTERS
- BATTERY MANAGEMENT IN NOMADIC EQUIPMENT
- POWER MANAGEMENT IN CELLULAR PHONES
- DC MOTOR DRIVE

Obsolete Product(s) - Obsolete Product(s)

Table 2: Order Codes

PART NUMBER	MARKING	PACKAGE	PACKAGING
STS4DPF30L	4DFS30L	SO-8	TAPE & REEL

Table 3: MOSFET Absolute Maximum Ratings

Symbol	Parameter	Value	Unit
V_{DS}	Drain-source Voltage (V_{GS} = 0)	30	V
V_{DGR}	Drain-gate Voltage (R_{GS} = 20 kΩ)	30	V
V_{GS}	Gate- source Voltage	± 16	V
I_D	Drain Current (continuous) at T_C = 25°C Single Operating	5	A
I_D	Drain Current (continuous) at T_C = 100°C Single Operating	4	A
I_{DM} (•)	Drain Current (pulsed)	20	A
P_{TOT}	Total Dissipation at T_C = 25°C Single Operating	2.5	W
T_j T_{stg}	Operating Junction Temperature Storage Temperature	150 -55 to 150	°C °C

(•) Pulse width limited by safe operating area
Note: For the P-CHANNEL MOSFET actual polarity of voltages and current has to be reversed

Table 4: Schottky Absolute Maximum Ratings

Symbol	Parameter		Value	Unit
V_{RRM}	Repetitive Peak Reverse Voltage		30	V
$I_{F(RMS)}$	RMS Forward Current		20	A
$I_{F(AV)}$	Average Forward Current	TL = 125°C δ = 0.5	3	A
I_{FSM}	Surge Non Repetitive Forward Current	tp = 10 ms Sinusoidal	75	A
I_{RRM}	Repetitive Peak Reverse Current	tp = 2 µs F = 1 kHz	1	A
I_{RSM}	Non Repetitive Peak Reverse Current	tp = 100 µs	1	A
dv/dt	Critical Rate Of Rise Of Reverse Voltage		10000	V/µs

Table 5: Thermal Data

Rthj-case	Thermal Resistance Junction-case Single Operating	50	°C/W
Rthj-amb	(*)Thermal Resistance Junction-ambient SCHOTTKY	100	°C/W
T_l	Maximum Lead Temperature For Soldering Purpose	300	°C

(*) Mounted on FR-4 board (Steady State)

ELECTRICAL CHARACTERISTICS (T_{CASE} =25°C UNLESS OTHERWISE SPECIFIED)

Table 6: On/Off

Symbol	Parameter	Test Conditions	Min.	Typ.	Max	Unit
$V_{(BR)DSS}$	Drain-source Breakdown Voltage	I_D = 250 µA, V_{GS} = 0	30			V
I_{DSS}	Zero Gate Voltage Drain Current (V_{GS} = 0)	V_{DS}= Max Rating V_{DS}= Max Rating, T_C= 125°C			1 10	µA µA
I_{GSS}	Gate-body Leakage Current (V_{DS} = 0)	V_{GS}= ± 16V			±100	nA
$V_{GS(th)}$	Gate Threshold Voltage	V_{DS} = V_{GS}, I_D= 250 µA	1	1.6	2.5	V
$R_{DS(on)}$	Static Drain-source On Resistance	V_{GS}= 10 V, I_D= 2.5 A V_{GS}= 4.5 V, I_D= 2.5 A		0.045 0.065	0.055 0.075	Ω Ω

Obsolete Product(s) - Obsolete Product(s)

ELECTRICAL CHARACTERISTICS(CONTINUED)

Table 7: Dynamic

Symbol	Parameter	Test Conditions	Min.	Typ.	Max.	Unit
g_{fs} (1)	Forward Transconductance	V_{DS} = 15 V, I_D= 2.5 A		10		S
C_{iss} C_{oss} C_{rss}	Input Capacitance Output Capacitance Reverse Transfer Capacitance	V_{DS} = 25V, f = 1 MHz, V_{GS} = 0		1350 490 130		pF pF pF

(1) Pulsed: Pulse duration = 300 µs, duty cycle 1.5%

Table 8: Switching On

Symbol	Parameter	Test Conditions	Min.	Typ.	Max.	Unit
$t_{d(on)}$ t_r	Turn-on Delay Time Rise Time	V_{DD} = 15 V, I_D = 2.5 A, R_G= 4.7 Ω, V_{GS} = 4.5 V (see Figure 16))		25 35		ns ns
Q_g Q_{gs} Q_{gd}	Total Gate Charge Gate-Source Charge Gate-Drain Charge	V_{DD} = 24 V, I_D = 5 A, V_{GS} = 5 V (see, Figure 19)		12.5 5 3	16	nC nC nC

Table 9: Switching Off

Symbol	Parameter	Test Conditions	Min.	Typ.	Max.	Unit
$t_{d(off)}$ t_f	Turn-off Delay Time Fall Time	V_{DD} = 15 V, I_D = 2.5 A, R_G= 4.7 Ω, V_{GS} = 4.5 V (see, Figure 16)		125 35		ns ns

Table 10: Source-Drain Diode

Symbol	Parameter	Test Conditions	Min.	Typ.	Max.	Unit
I_{SD}	Source-drain Current				5	A
I_{SDM} (2)	Source-drain Current (pulsed)				20	A
V_{SD} (1)	Forward On Voltage	I_{SD} = 5 A, V_{GS} = 0			1.2	V
t_{rr} Q_{rr} I_{RRM}	Reverse Recovery Time Reverse Recovery Charge Reverse Recovery Current	I_{SD} = 5 A, di/dt = 100 A/µs V_{DD} = 15V, T_j = 150°C (see, Figure 17)		45 36 1.6		ns nC A

Table 11: Schottcky Static Electrical Characteristics

Symbol	Parameter	Test Conditions	Min.	Typ.	Max.	Unit
I_R(*)	Reversed Leakage Current	T_J = 25 °C , V_R = 30 V T_J = 125 °C , V_R = 30 V		 0.03	0.2 100	mA mA
V_F(*)	Forward Voltage Drop	T_J = 25 °C , I_F = 3 A T_J = 125 °C , I_F = 3 A		 0.46	0.51 0.46	V V

(1) Pulsed: Pulse duration = 300 µs, duty cycle 1.5 %.
(2) Pulse width limited by safe operating area.

Obsolete Product(s) - Obsolete Product(s)

Figure 3: Safe Operating

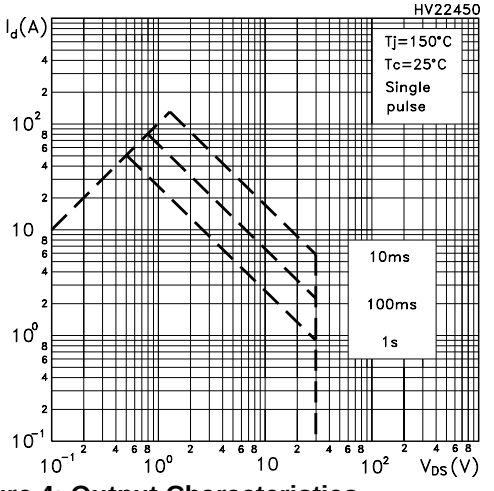

Figure 4: Output Characteristics

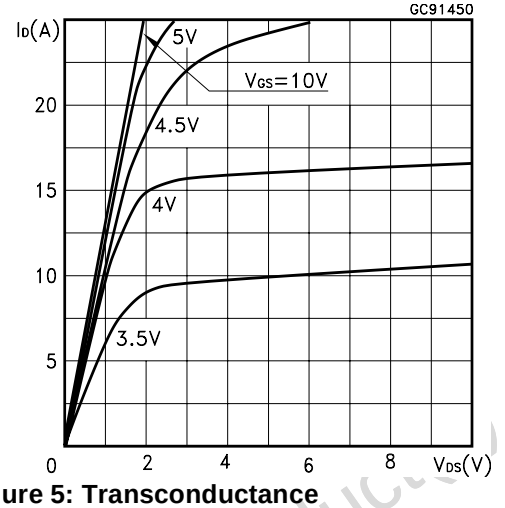

Figure 5: Transconductance

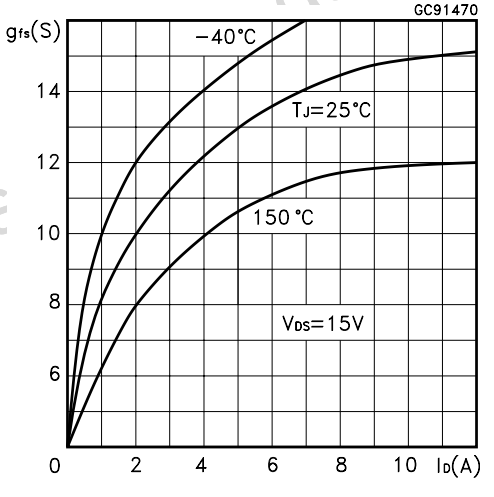

Figure 6: Thermal Impedance

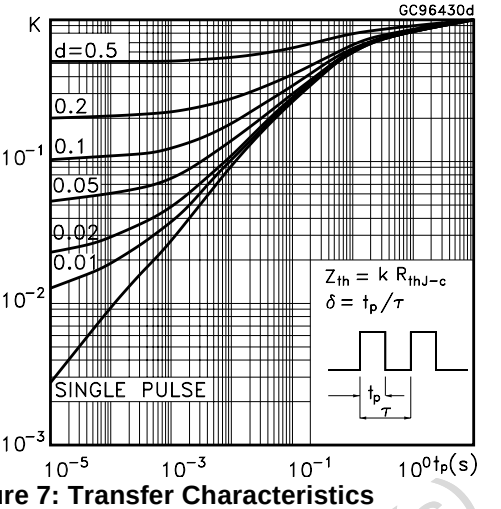

Figure 7: Transfer Characteristics

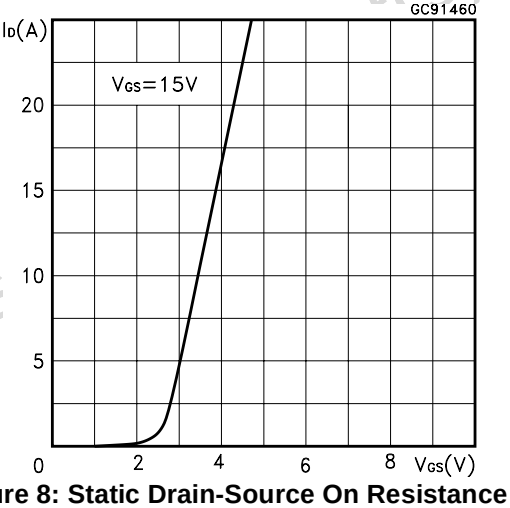

Figure 8: Static Drain-Source On Resistance

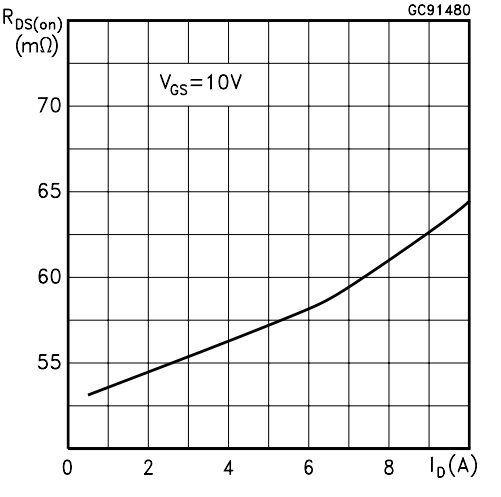

Figure 9: Gate Charge vs Gate-Source Voltage

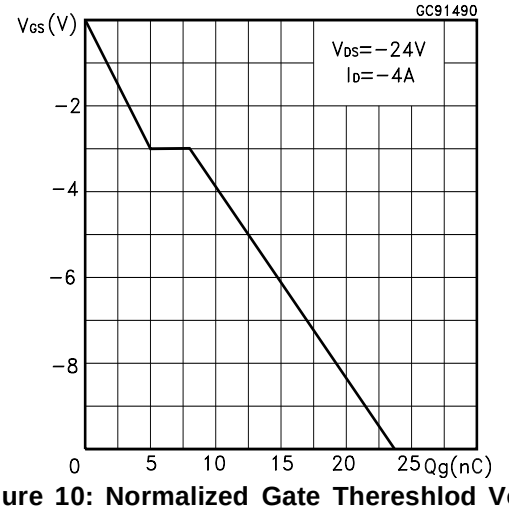

Figure 10: Normalized Gate Thereshlod Voltage vs Temperature

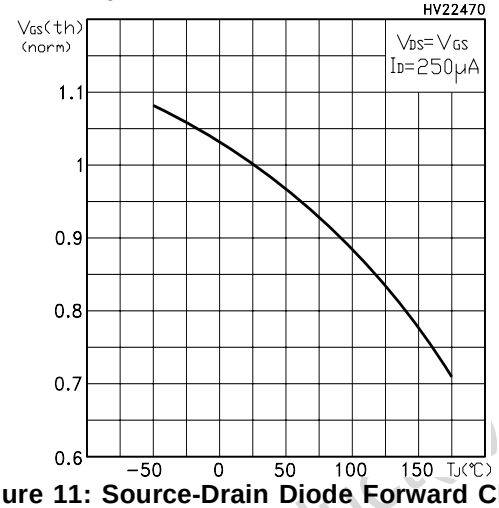

Figure 11: Source-Drain Diode Forward Characteristics

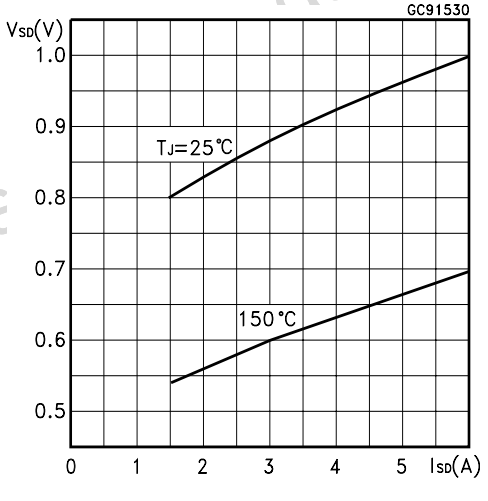

Figure 12: Capacitances Variations

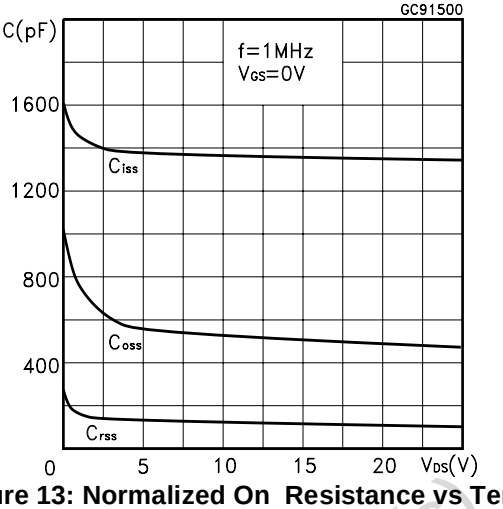

Figure 13: Normalized On Resistance vs Temperature

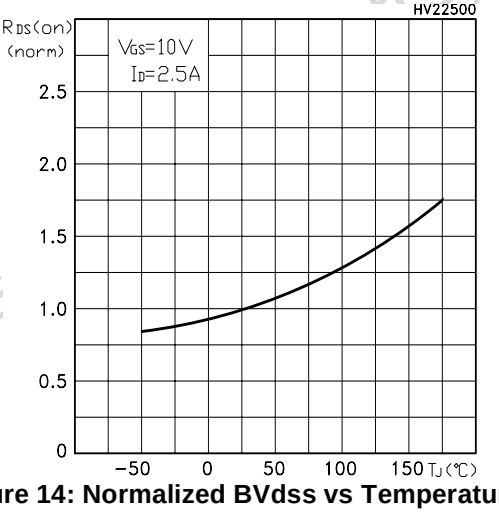

Figure 14: Normalized BVdss vs Temperature

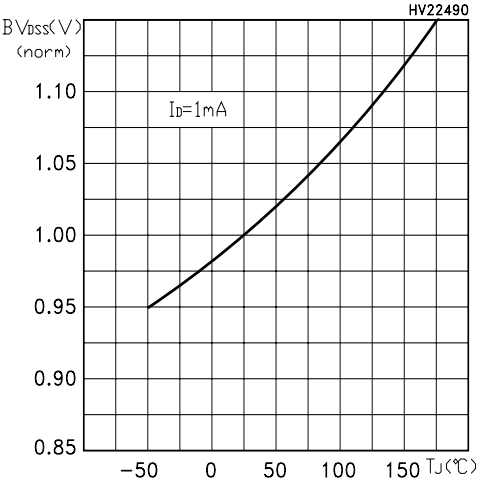

Figure 15: Unclamped Inductive Load Test Circuit

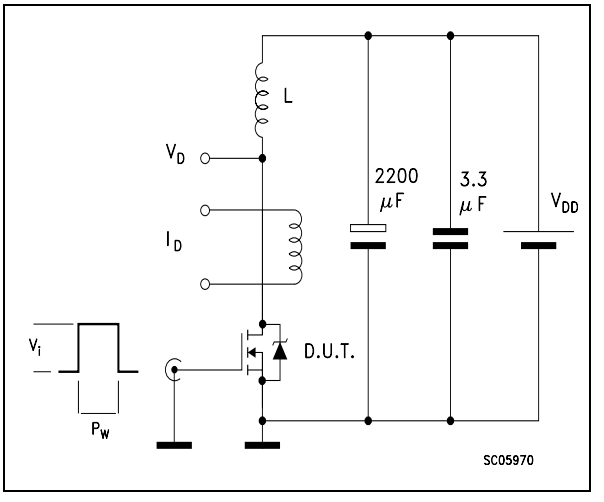

Figure 16: Switching Times Test Circuit For Resistive Load

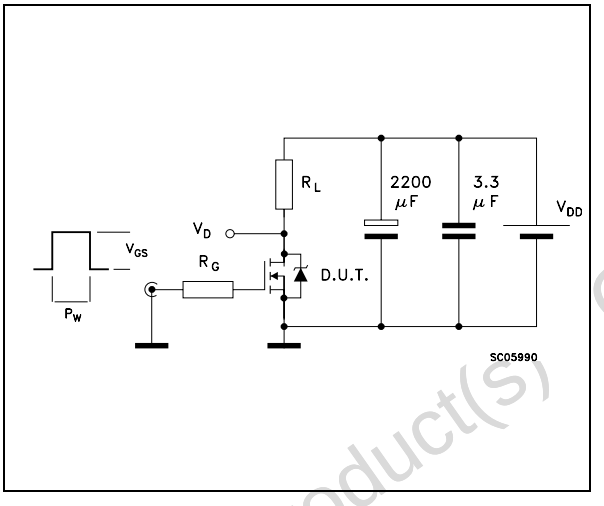

Figure 17: Test Circuit For Inductive Load Switching and Diode Recovery Times

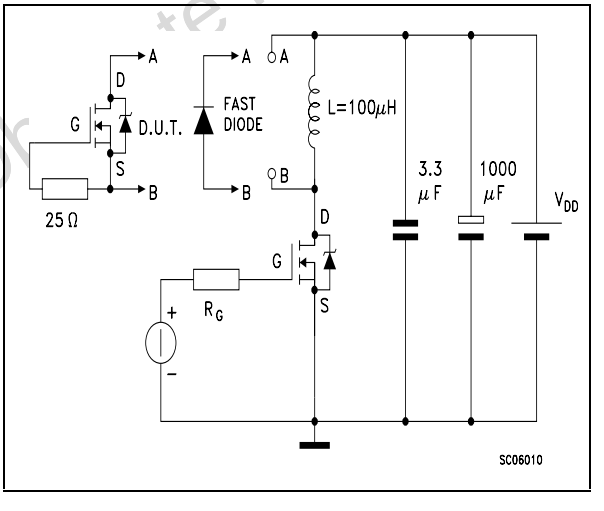

Figure 18: Unclamped Inductive Wafeform

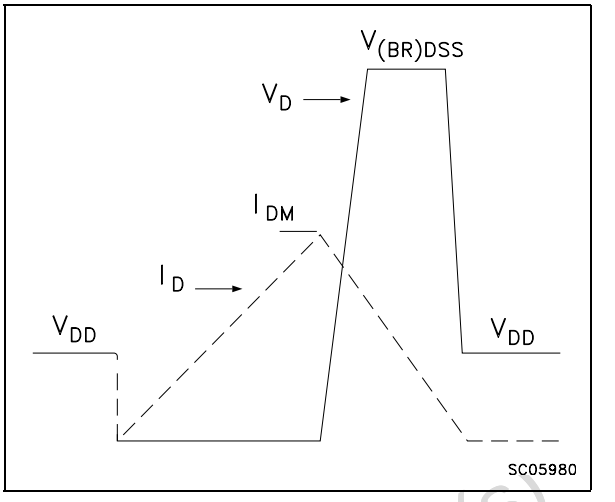

Figure 19: Gate Charge Test Circuit

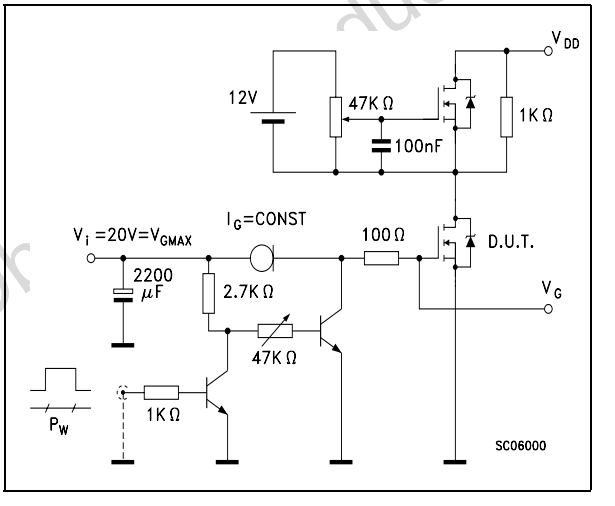

Obsolete Product(s) - Obsolete Product(s)

SO-8 MECHANICAL DATA

DIM.	mm.			inch		
	MIN.	TYP	MAX.	MIN.	TYP.	MAX.
A			1.75			0.068
a1	0.1		0.25	0.003		0.009
a2			1.65			0.064
a3	0.65		0.85	0.025		0.033
b	0.35		0.48	0.013		0.018
b1	0.19		0.25	0.007		0.010
C	0.25		0.5	0.010		0.019
c1	45 (typ.)					
D	4.8		5.0	0.188		0.196
E	5.8		6.2	0.228		0.244
e		1.27			0.050	
e3		3.81			0.150	
F	3.8		4.0	0.14		0.157
L	0.4		1.27	0.015		0.050
M			0.6			0.023
S	8 (max.)					

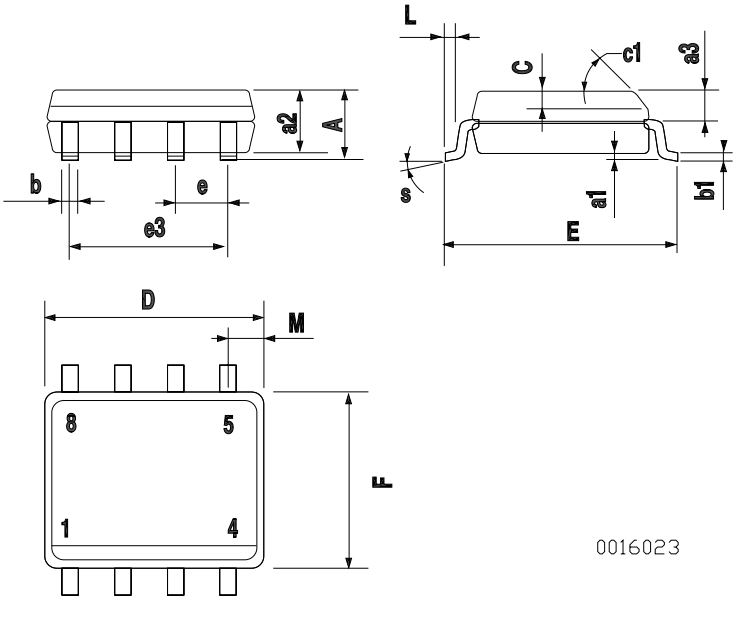

Table 12: Revision History

Date	Revision	Description of Changes
14-Dec-2004	1	First Revision

Obsolete Product(s) - Obsolete Product(s)

Information furnished is believed to be accurate and reliable. However, STMicroelectronics assumes no responsibility for the consequences of use of such information nor for any infringement of patents or other rights of third parties which may result from its use. No license is granted by implication or otherwise under any patent or patent rights of STMicroelectronics. Specifications mentioned in this publication are subject to change without notice. This publication supersedes and replaces all information previously supplied. STMicroelectronics products are not authorized for use as critical components in life support devices or systems without express written approval of STMicroelectronics.

The ST logo is a registered trademark of STMicroelectronics

All other names are the property of their respective owners

© 2004 STMicroelectronics - All Rights Reserved

STMicroelectronics group of companies

Australia - Belgium - Brazil - Canada - China - Czech Republic - Finland - France - Germany - Hong Kong - India - Israel - Italy - Japan - Malaysia - Malta - Morocco - Singapore - Spain - Sweden - Switzerland - United Kingdom - United States of America