STFW4N150, STP4N150, STW4N150

Datasheet

N-channel 1500 V, 6 Ω typ., 4 A, PowerMESH Power MOSFET in TO-220, TO-247 and TO-3PF packages

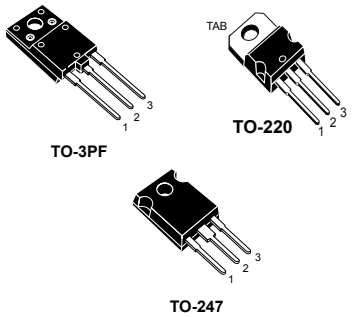

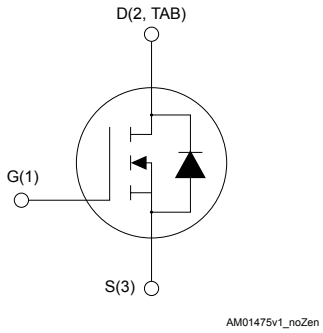

Features

- 100% avalanche tested
- Intrinsic capacitances and Q_g minimized
- High speed switching
- Fully isolated TO-3PF plastic package

Applications

- Switching applications

Description

These Power MOSFETs are designed using the STMicroelectronics consolidated strip-layout-based MESH OVERLAY process. The result is a product that matches or improves on the performance of comparable standard parts from other manufacturers.

Product status links
STFW4N150
STP4N150
STW4N150

1 Electrical ratings

Table 1. Absolute maximum ratings

Symbol	Parameter	Value			Unit
		TO-3PF	TO-220	TO-247	
V_{DS}	Drain-source voltage	1500			V
V_{GS}	Gate-source voltage	±30			V
I_D	Drain current (continuous) at T_C = 25 °C	4[1]	4	4	A
	Drain current (continuous) at T_C = 100 °C	2.5[1]	2.5	2.5	
I_{DM}[2]	Drain current (pulsed)	12	12	12	A
P_{TOT}	Total power dissipation at T_C = 25 °C	63	160		W
V_{ISO}	Insulation withstand voltage (RMS) from all three leads to external heat sink (t = 1 s; T_C = 25 °C)	3.5			kV
T_{stg}	Storage temperature range	-55 to 150			°C
T_J	Operating junction temperature range				

1. *Limited by maximum junction temperature.*
2. *Pulse width limited by safe operating area.*

Table 2. Thermal data

Symbol	Parameter	Value			Unit
		TO-3PF	TO-220	TO-247	
R_{thJC}	Thermal resistance, junction-to-case	2	0.78		°C/W
R_{thJA}	Thermal resistance, junction-to-ambient	50	62.5	50	°C/W

Table 3. Avalanche characteristics

Symbol	Parameter	Value	Unit
I_{AR}	Avalanche current, repetitive or not-repetitive (pulse width limited by T_J max)	4	A
E_{AS}	Single pulse avalanche energy (starting T_J = 25 °C, I_D = I_{AR}, V_{DD} = 50 V)	350	mJ

2 Electrical characteristics

(T_C = 25 °C unless otherwise specified)

Table 4. Static

Symbol	Parameter	Test conditions	Min.	Typ.	Max.	Unit
$V_{(BR)DSS}$	Drain-source breakdown voltage	V_{GS} = 0 V, I_D = 1 mA	1500			V
I_{DSS}	Zero gate voltage drain current	V_{GS} = 0 V, V_{DS} = 1500 V			10	µA
		V_{GS} = 0 V, V_{DS} = 1500 V, T_C = 125 °C (1)			500	
I_{GSS}	Gate-body leakage current	V_{DS} = 0 V, V_{GS} = ±30 V			±100	nA
$V_{GS(th)}$	Gate threshold voltage	V_{DS} = V_{GS}, I_D = 250 µA	3	4	5	V
$R_{DS(on)}$	Static drain-source on-resistance	V_{GS} = 10 V, I_D = 2 A		6	7	Ω

1. *Specified by design, not tested in production.*

Table 5. Dynamic

Symbol	Parameter	Test conditions	Min.	Typ.	Max.	Unit
C_{iss}	Input capacitance	V_{DS} = 25 V, f = 1 MHz, V_{GS} = 0 V	-	1100		pF
C_{oss}	Output capacitance		-	120		pF
C_{rss}	Reverse transfer capacitance		-	12		pF
Q_g	Total gate charge	V_{DD} = 600 V, I_D = 4 A, V_{GS} = 0 to 10 V (see Figure 18. Test circuit for gate charge behavior)	-	29	50(1)	nC
Q_{gs}	Gate-source charge		-	8		nC
Q_{gd}	Gate-drain charge		-	12		nC

1. *Specified by design, not tested in production.*

Table 6. Switching times

Symbol	Parameter	Test conditions	Min.	Typ.	Max.	Unit
$t_{d(on)}$	Turn-on delay time	V_{DD} = 750 V, I_D = 2 A, R_G = 4.7 Ω, V_{GS} = 10 V (see Figure 17. Test circuit for resistive load switching times and Figure 22. Switching time waveform)	-	34	-	ns
t_r	Rise time		-	31	-	ns
$t_{d(off)}$	Turn-off delay time		-	47	-	ns
t_f	Fall time		-	45	-	ns

Table 7. Source-drain diode

Symbol	Parameter	Test conditions	Min.	Typ.	Max.	Unit
I_{SD}	Source-drain current		-		4	A
I_{SDM} (1)	Source-drain current (pulsed)		-		12	A
V_{SD} (2)	Forward on voltage	V_{GS} = 0 V, I_{SD} = 4 A	-		2	V
t_{rr}	Reverse recovery time	I_{SD} = 4 A, di/dt = 100 A/µs,	-	520		ns
Q_{rr}	Reverse recovery charge	V_{DD} = 45 V	-	3.1		µC
I_{RRM}	Reverse recovery current	(see Figure 19. Test circuit for inductive load switching and diode recovery times)	-	12		A
t_{rr}	Reverse recovery time	I_{SD} = 4 A, di/dt = 100 A/µs,	-	650		ns
Q_{rr}	Reverse recovery charge	V_{DD} = 45 V, T_J = 150 °C	-	4.1		µC
I_{RRM}	Reverse recovery current	(see Figure 19. Test circuit for inductive load switching and diode recovery times)	-	12.6		A

1. *Pulse width is limited by safe operating area.*
2. *Pulse test: pulse duration = 300 µs, duty cycle 1.5%.*

2.1 Electrical characteristics (curves)

Figure 1. Safe operating area for TO-3PF

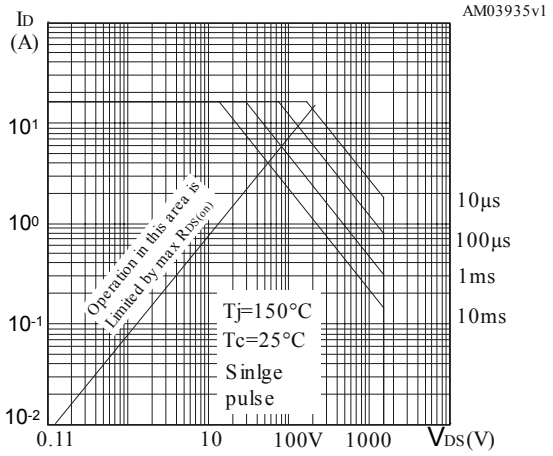

Figure 2. Normalized transient thermal impedance for TO-3PF

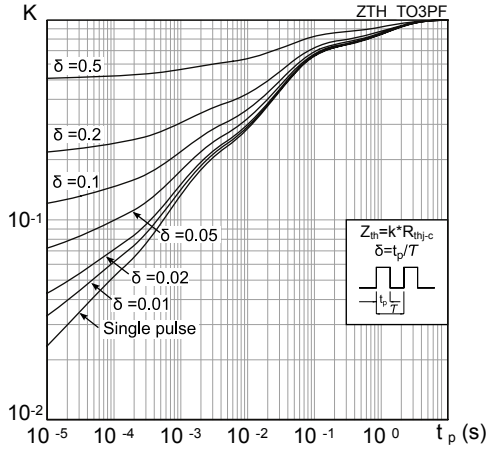

Figure 3. Safe operating area for TO-220

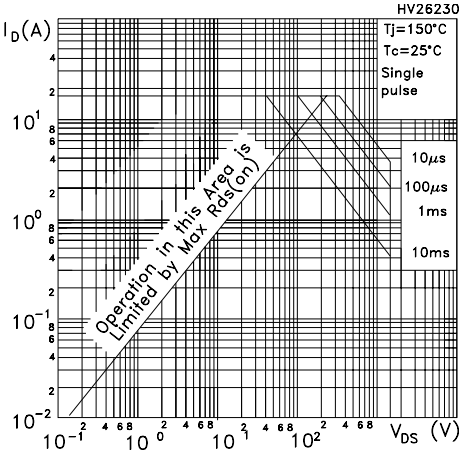

Figure 4. Normalized transient thermal impedance for TO-220

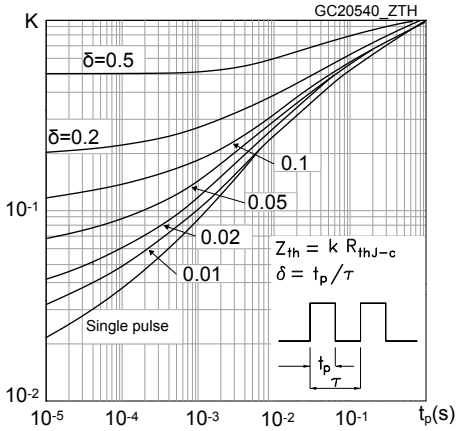

Figure 5. Safe operating area for TO-247

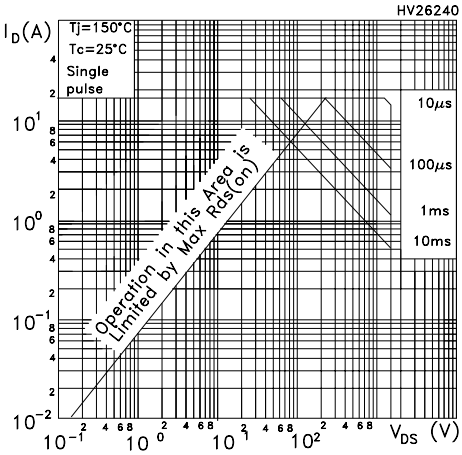

Figure 6. Normalized transient thermal impedance for TO-247

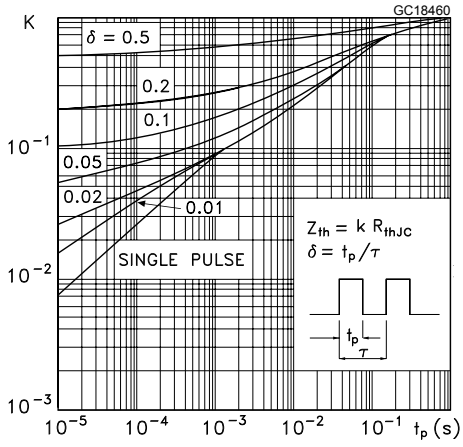

Figure 7. Typical output characteristics

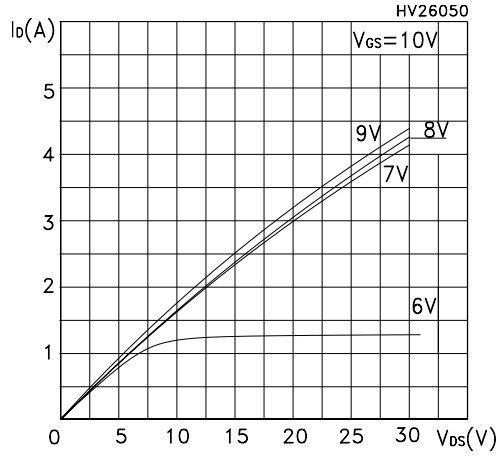

Figure 8. Typical transfer characteristics

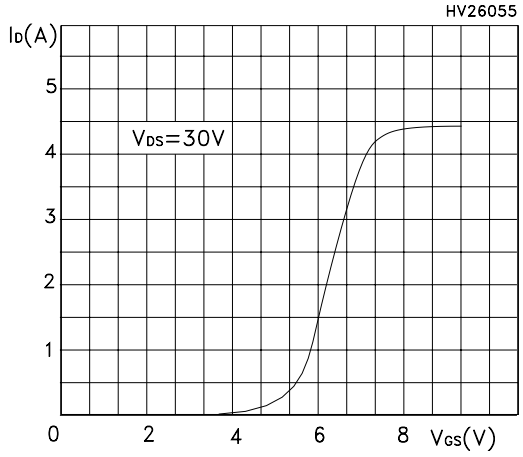

Figure 9. Normalized on-resistance vs temperature

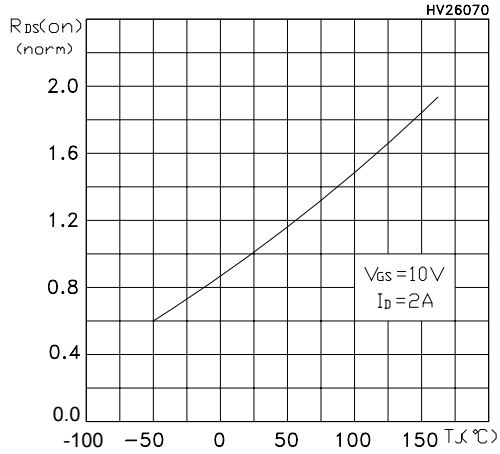

Figure 10. Typical drain-source on-resistance

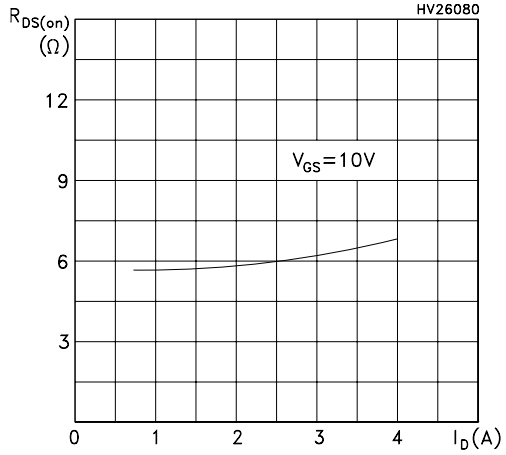

Figure 11. Typical gate charge characteristics

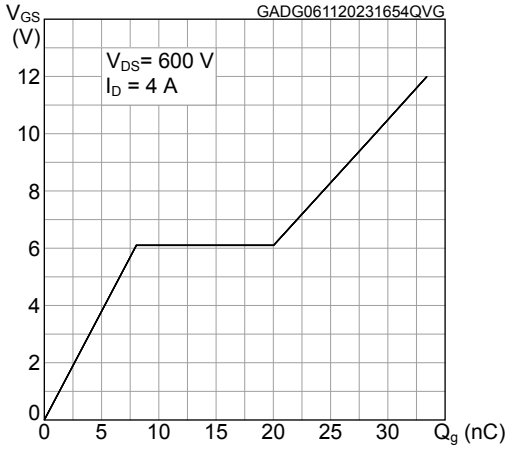

Figure 12. Typical capacitance characteristics

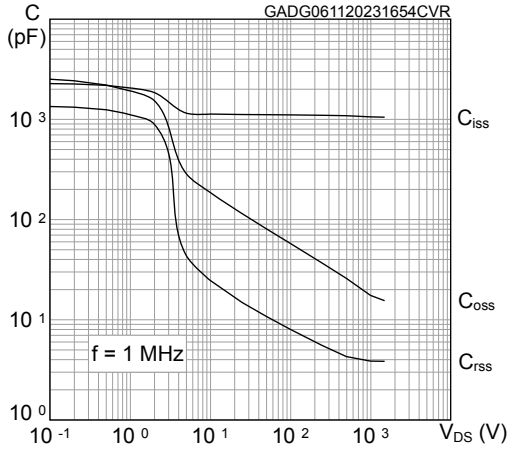

Figure 13. Normalized gate threshold vs temperature

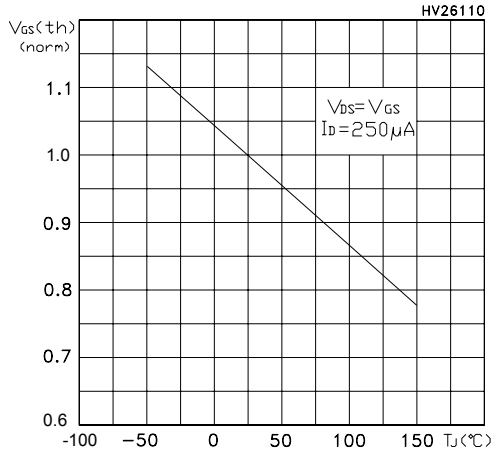

Figure 14. Normalized breakdown voltage vs temperature

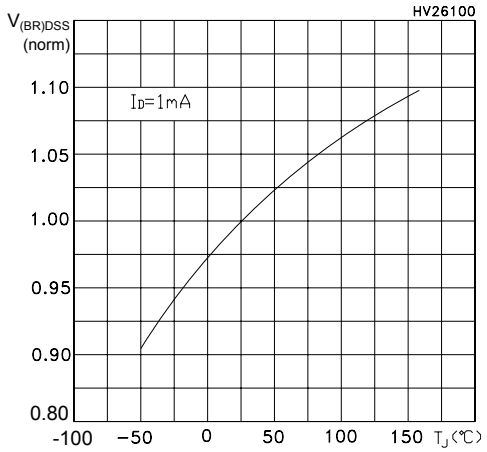

Figure 15. Typical reverse diode forward characteristics

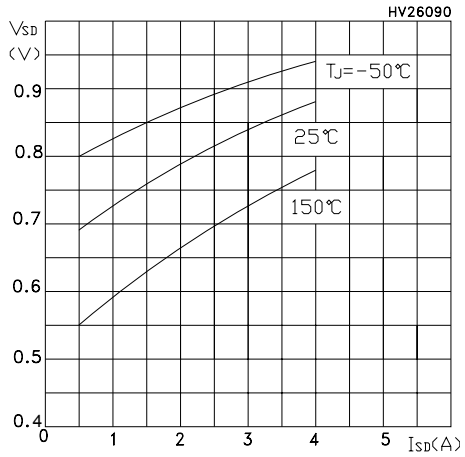

Figure 16. Maximum avalanche energy vs temperature

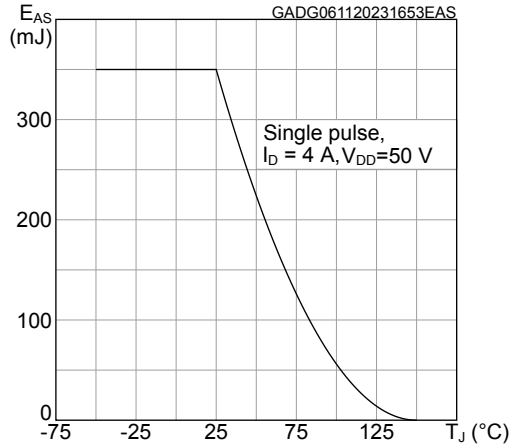

3 Test circuits

Figure 17. Test circuit for resistive load switching times

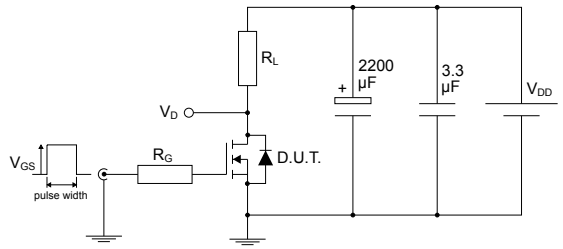

AM01468v1

Figure 18. Test circuit for gate charge behavior

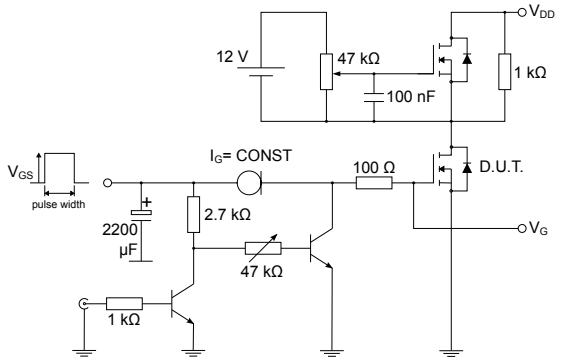

AM01469v1

Figure 19. Test circuit for inductive load switching and diode recovery times

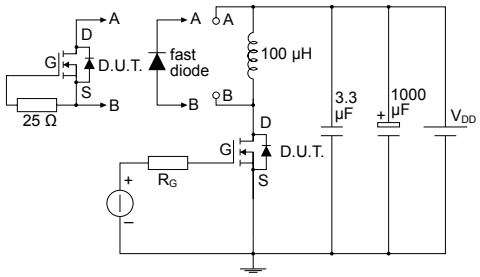

AM01470v1

Figure 20. Unclamped inductive load test circuit

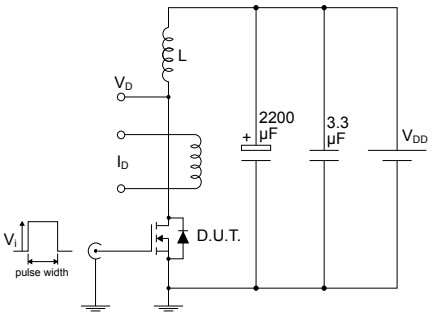

AM01471v1

Figure 21. Unclamped inductive waveform

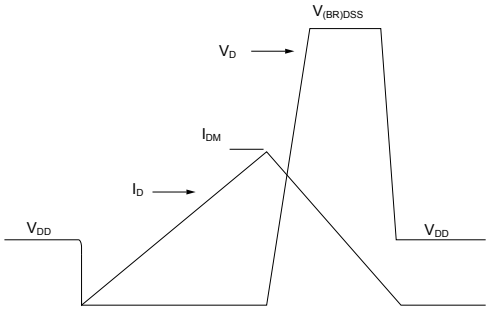

AM01472v1

Figure 22. Switching time waveform

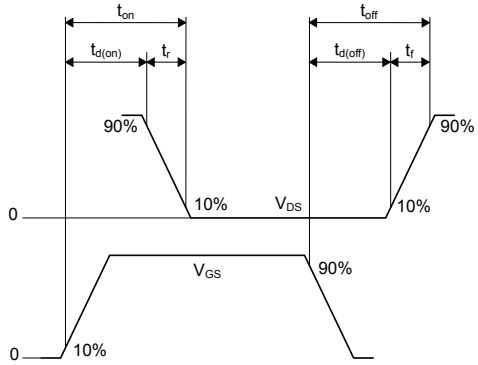

AM01473v1

4 Package information

In order to meet environmental requirements, ST offers these devices in different grades of ECOPACK packages, depending on their level of environmental compliance. ECOPACK specifications, grade definitions and product status are available at: www.st.com. ECOPACK is an ST trademark.

4.1 TO-3PF type A package information

Figure 23. TO-3PF type A package outline

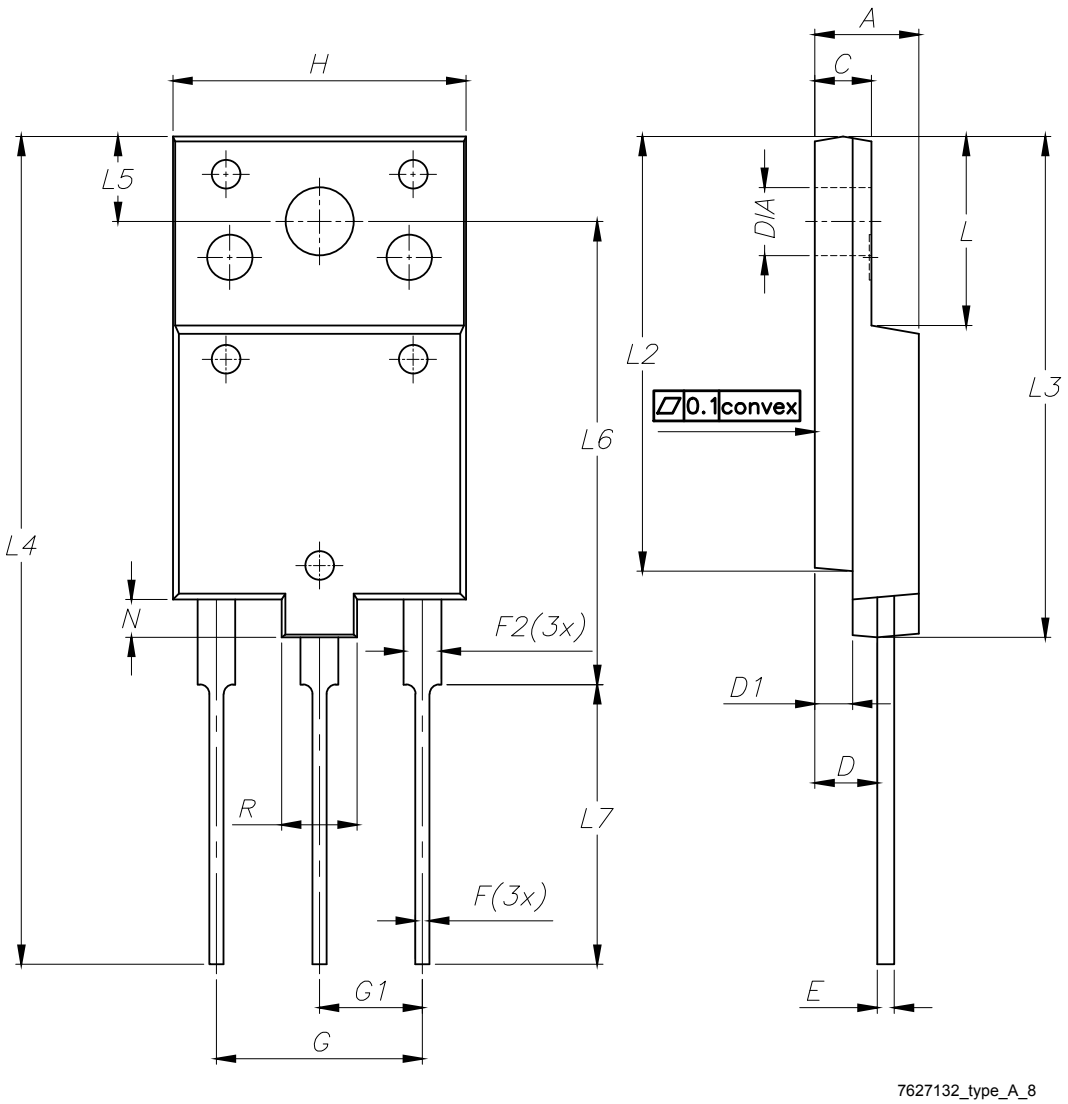

Table 8. TO-3PF type A mechanical data

Dim.	mm		
	Min.	Typ.	Max.
A	5.30		5.70
C	2.80		3.20
D	3.10		3.50
D1	1.80		2.20
E	0.80		1.00
F	0.65		0.85
F2	1.80		2.20
G	10.80		11.00
G1	5.35	5.45	5.55
H	15.30		15.70
L	9.80	10.00	10.20
L2	22.80		23.20
L3	26.30		26.70
L4	43.60		44.00
L5	4.30		4.70
L6	24.30		24.70
L7	14.60		15.00
N	1.80		2.20
R	3.80		4.20
Dia	3.40		3.80

4.2 TO-3PF type B package information

Figure 24. TO-3PF type B package outline

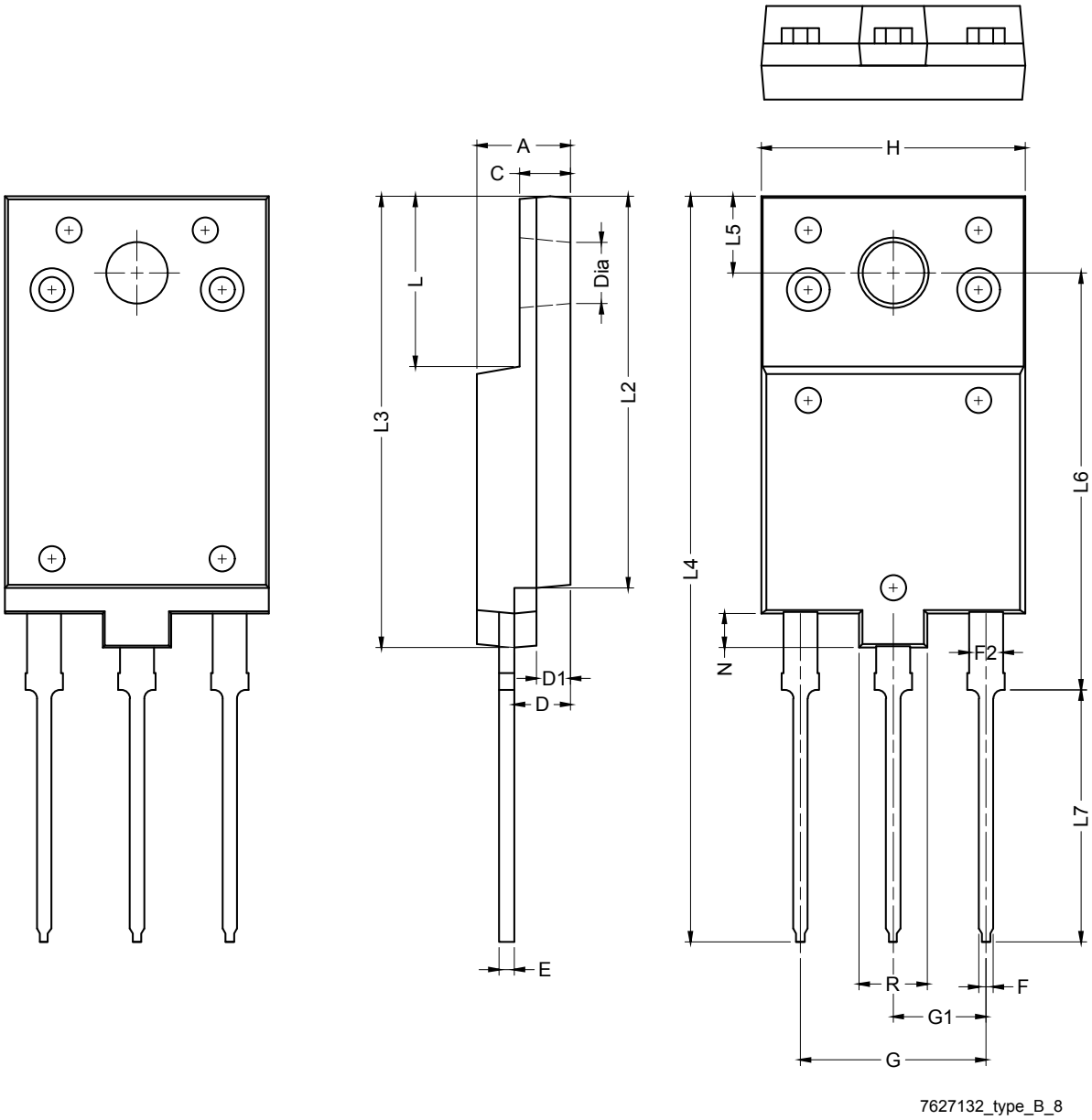

Table 9. TO-3PF type B mechanical data

Dim.	mm		
	Min.	Typ.	Max.
A	5.30	5.50	5.70
C	2.80	3.00	3.20
D	3.10	3.30	3.50
D1	1.80	2.00	2.20
E	0.80	0.95	1.10
F	0.65	0.80	0.95
F2	1.80	2.00	2.20
G	10.30	10.90	11.50
G1	5.25	5.45	5.65
H	15.30	15.50	15.70
L	9.80	10.00	10.20
L2	22.80	23.00	23.20
L3	26.30	26.50	26.70
L4	43.20	43.80	44.40
L5	4.30	4.50	4.70
L6	24.30	24.50	24.70
L7	14.60	14.80	15.00
N	1.80	2.00	2.20
R	3.80	4.00	4.20
Dia	3.40	3.60	3.80

4.3 TO-220 type A package information

Figure 25. TO-220 type A package outline

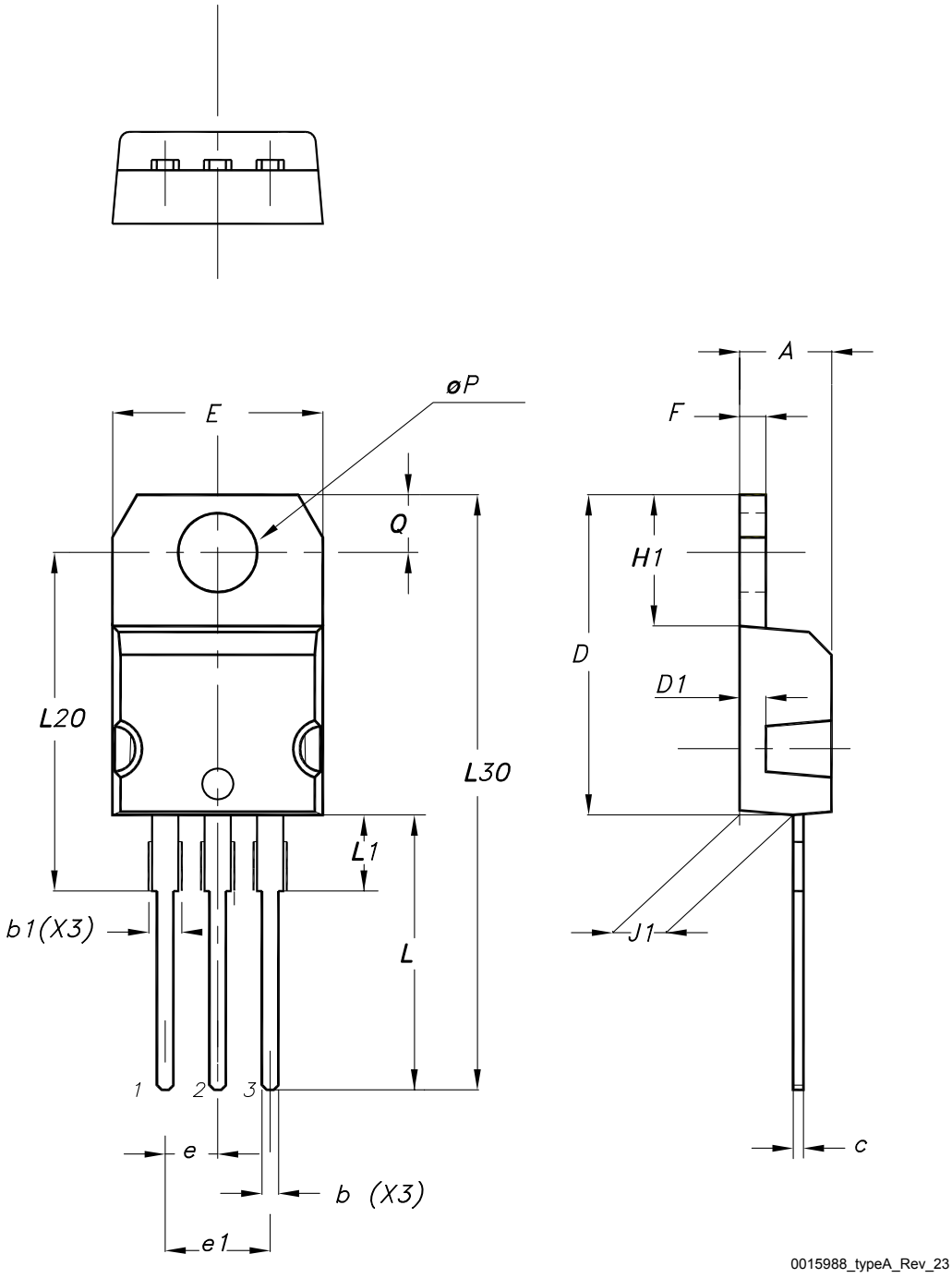

Table 10. **TO-220 type A package mechanical data**

Dim.	mm		
	Min.	Typ.	Max.
A	4.40		4.60
b	0.61		0.88
b1	1.14		1.55
c	0.48		0.70
D	15.25		15.75
D1		1.27	
E	10.00		10.40
e	2.40		2.70
e1	4.95		5.15
F	1.23		1.32
H1	6.20		6.60
J1	2.40		2.72
L	13.00		14.00
L1	3.50		3.93
L20		16.40	
L30		28.90	
øP	3.75		3.85
Q	2.65		2.95
Slug flatness		0.03	0.10

4.4 TO-220 type H package information

Figure 26. TO-220 type H package outline

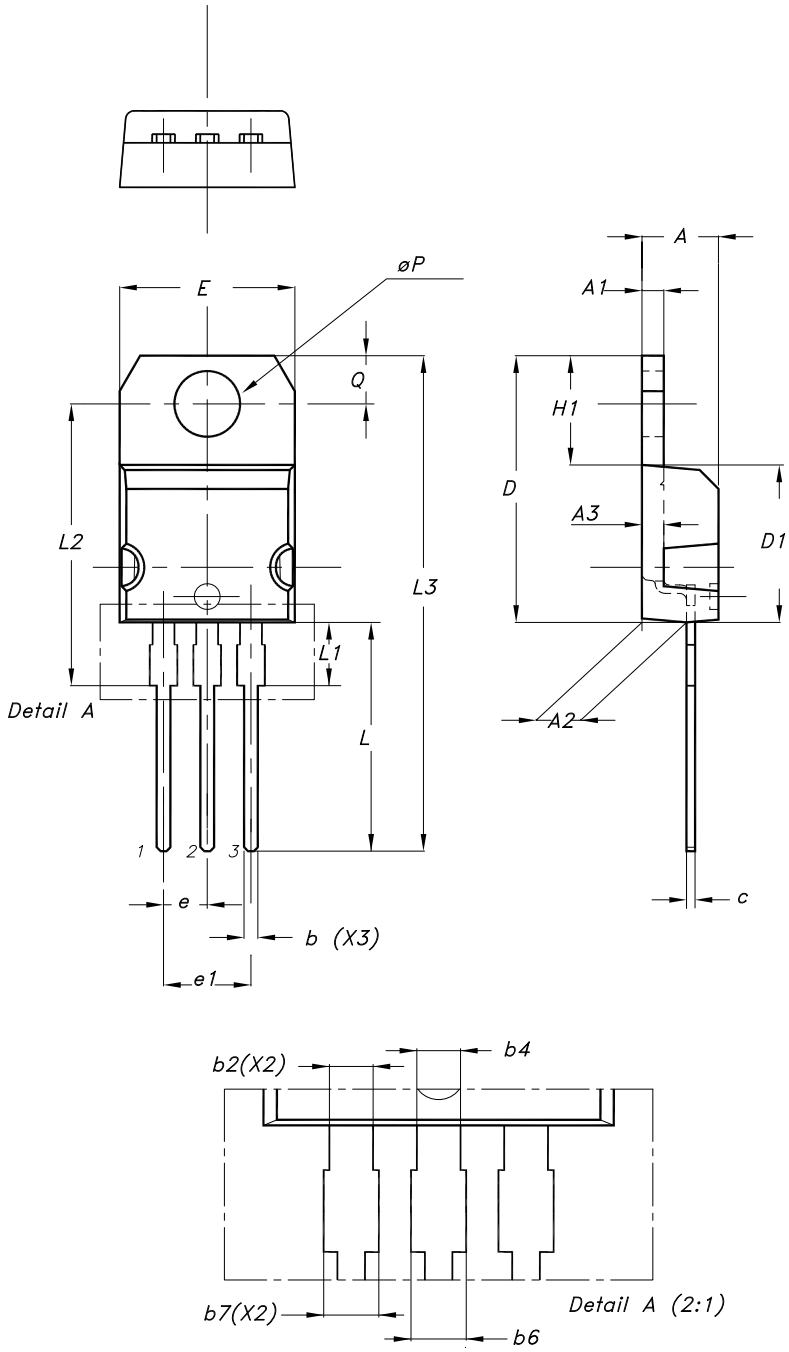

0015988_H_23

Table 11. TO-220 type H package mechanical data

Dim.	mm		
	Min.	Typ.	Max.
A	4.40	4.45	4.50
A1	1.22		1.32
A2	2.49	2.59	2.69
A3	1.17	1.27	1.37
b	0.78		0.87
b2	1.25		1.34
b4	1.20		1.29
b6			1.50
b7			1.45
c	0.49		0.56
D	15.40	15.50	15.60
D1	9.05	9.15	9.25
E	10.08	10.18	10.28
e	2.44	2.54	2.64
e1	4.98	5.08	5.18
H1	6.25	6.35	6.45
L	13.20	13.40	13.60
L1	3.50	3.70	3.90
L2	16.30	16.40	16.50
L3	28.70	28.90	29.10
∅P	3.75	3.80	3.85
Q	2.70	2.80	2.90
Slug flatness		0.03	0.10

4.5 TO-247 package information

Figure 27. TO-247 package outline

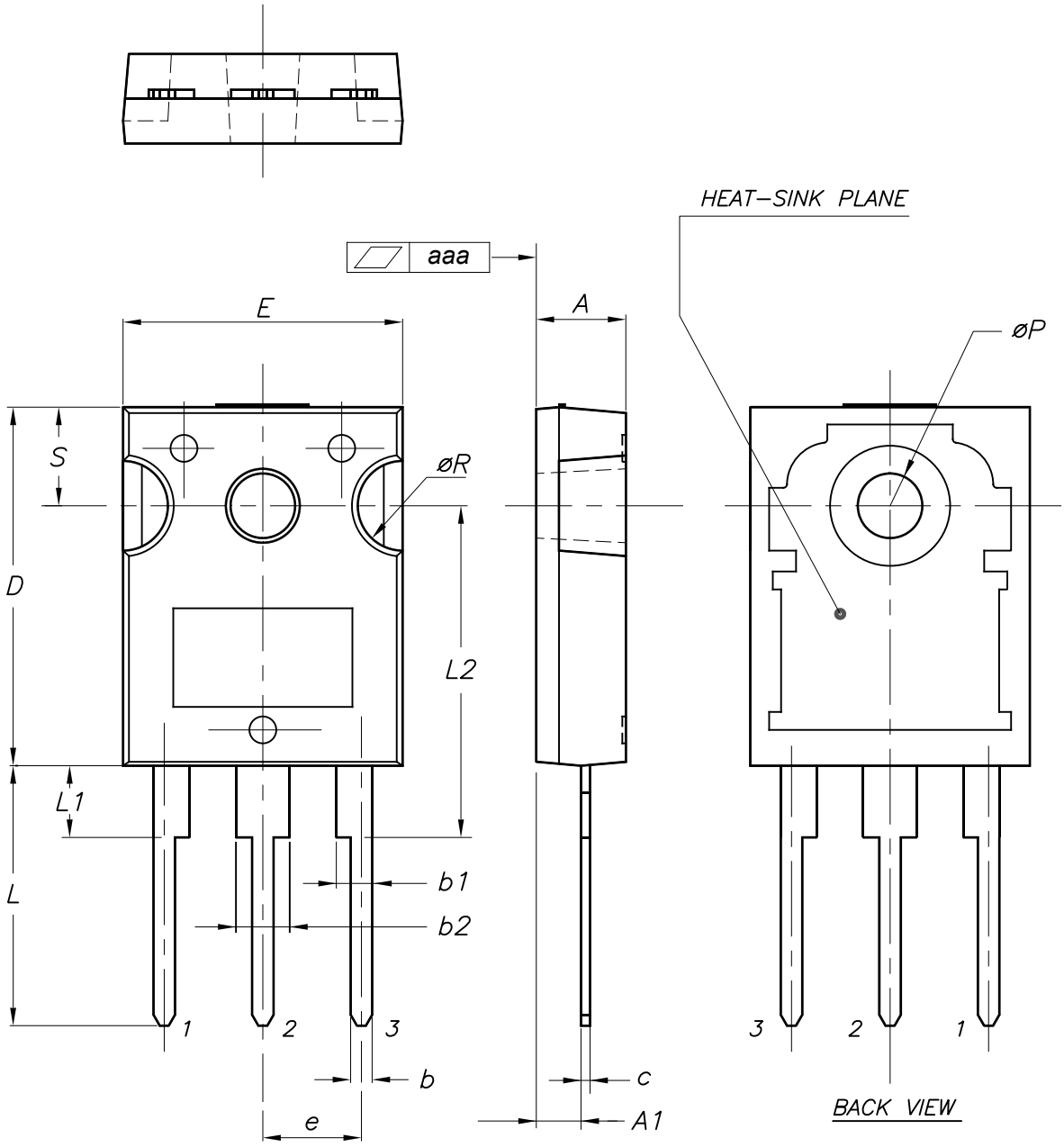

0075325_10

Table 12. **TO-247 package mechanical data**

Dim.	mm		
	Min.	Typ.	Max.
A	4.85		5.15
A1	2.20		2.60
b	1.0		1.40
b1	2.0		2.40
b2	3.0		3.40
c	0.40		0.80
D	19.85		20.15
E	15.45		15.75
e	5.30	5.45	5.60
L	14.20		14.80
L1	3.70		4.30
L2		18.50	
ØP	3.55		3.65
ØR	4.50		5.50
S	5.30	5.50	5.70
aaa		0.04	0.10

5 Ordering information

Table 13. **Order codes**

Order codes	Marking	Package	Packing
STFW4N150	4N150	TO-3PF	Tube
STP4N150	P4N150	TO-220	
STW4N150	W4N150	TO-247	

Revision history

Table 14. Document revision history

Date	Revision	Changes
29-Mar-2005	1	Initial release
07-Jul-2005	2	Removed TO-220FP
07-Oct-2005	3	Document status promoted from preliminary data to datasheet
10-Aug-2006	4	Document reformatted, no content change
06-Nov-2007	5	Updated unit on *Table 5: On/off states*
09-Apr-2008	6	Added new packages: TO-220FH, TO-3PF
21-Jan-2009	7	Remove package TO-220FH
23-Feb-2009	8	Added P_{TOT} value for TO-3PF P_{TOT} (*Table 2: Absolute maximum ratings*)
23-Jul-2009	9	Added new figures: Figure 4: Safe operating area for TO-3PF and Figure 5: Thermal impedance for TO-3PF
08-Nov-2023	10	Modified Features and Description on cover page. Modified Table 4. Static, Table 5. Dynamic and Table 7. Source-drain diode. Modified Figure 11. Typical gate charge characteristics, Figure 12. Typical capacitance characteristics and Figure 16. Maximum avalanche energy vs temperature. Updated Section 4 Package information. Minor text changes.

Contents

1 **Electrical ratings** 2
2 **Electrical characteristics** 3
2.1 Electrical characteristics (curves) 5
3 **Test circuits** 8
4 **Package information** 9
4.1 TO-3PF type A package information 10
4.2 TO-3PF type B package information 12
4.3 TO-220 type A package information 14
4.4 TO-220 type H package information 16
4.5 TO-247 package information 18
5 **Ordering information** 20
Revision history 21

IMPORTANT NOTICE – READ CAREFULLY

STMicroelectronics NV and its subsidiaries (“ST”) reserve the right to make changes, corrections, enhancements, modifications, and improvements to ST products and/or to this document at any time without notice. Purchasers should obtain the latest relevant information on ST products before placing orders. ST products are sold pursuant to ST’s terms and conditions of sale in place at the time of order acknowledgment.

Purchasers are solely responsible for the choice, selection, and use of ST products and ST assumes no liability for application assistance or the design of purchasers’ products.

No license, express or implied, to any intellectual property right is granted by ST herein.

Resale of ST products with provisions different from the information set forth herein shall void any warranty granted by ST for such product.

ST and the ST logo are trademarks of ST. For additional information about ST trademarks, refer to www.st.com/trademarks. All other product or service names are the property of their respective owners.

Information in this document supersedes and replaces information previously supplied in any prior versions of this document.

© 2023 STMicroelectronics – All rights reserved