STPS40170C

Datasheet

170 V power Schottky rectifier

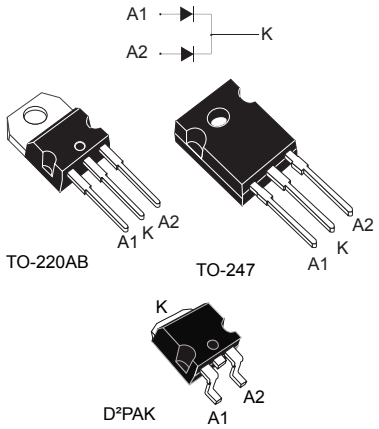

Features

- High junction temperature capability
- Low leakage current
- High voltage capabilities
- Good trade-off between leakage current and forward voltage drop
- Low thermal resistance
- High frequency operation
- Avalanche specification
- ECOPACK®2 compliant for TO-220AB and TO-247, on demand for D²PAK

Applications

- Switching diode
- SMPS
- DC/DC converter
- Telecom power

Description

This dual center tab Schottky rectifier is suited for high frequency switched mode power supplies.

Packaged in TO-247, D²PAK and TO-247, the STPS40170C is optimized for use to enhance the reliability in applications.

Product status link	
STPS40170C	
Product summary	
Symbol	**Value**
$I_{F(AV)}$	2 x 20 A
V_{RRM}	170 V
T_j	175 °C
V_F (typ.)	0.69 V

1 Characteristics

Table 1. Absolute ratings (limiting values at 25 °C, unless otherwise specified, per diode)

Symbol	Parameter			Value	Unit
V_{RRM}	Repetitive peak reverse voltage			170	V
$I_{F(RMS)}$	Forward rms current			60	A
$I_{F(AV)}$	Average forward current, δ = 0.5 square wave	T_c = 150 °C	Per diode	20	A
		T_c = 145 °C	Per device	40	
I_{FSM}	Surge non repetitive forward current	t_p = 10 ms sinusoidal		250	A
P_{ARM}	Repetitive peak avalanche power	t_p = 10 µs, T_j = 125 °C		1015	W
T_{stg}	Storage temperature range			-65 to +175	°C
T_j	Maximum operating junction temperature range(1)			175	°C

1. *$(dP_{tot}/dT_j) < (1/R_{th(j-a)})$ condition to avoid thermal runaway for a diode on its own heatsink.*

Table 2. Thermal resistance parameters

Symbol	Parameter		Max. value	Unit
$R_{th(j-c)}$	Junction to case	Per diode	1.20	°C/W
		Total	0.85	
$R_{th(c)}$	Coupling		0.50	

When the diodes 1 and 2 are used simultaneously :
ΔT_j(diode 1) = P(diode1) x $R_{th(j-c)}$(per diode) + P(diode 2) x $R_{th(c)}$

Table 3. Static electrical characteristics (per diode)

Symbol	Parameter	Test conditions		Min.	Typ.	Max.	Unit
I_R(1)	Reverse leakage current	T_j = 25 °C	$V_R = V_{RRM}$	-		30	µA
		T_j = 125 °C		-	7	30	mA
V_F(2)	Forward voltage drop	T_j = 25 °C	I_F = 20 A	-		0.92	V
		T_j = 125 °C		-	0.69	0.75	
		T_j = 25 °C	I_F = 40 A	-		1.00	
		T_j = 125 °C		-	0.79	0.86	

1. *Pulse test: t_p = 5 ms, δ < 2%*
2. *Pulse test: t_p = 380 µs, δ < 2%*

To evaluate the conduction losses, use the following equation:

$P = 0.64 \times I_{F(AV)} + 0.0055 \times I_F{}^2{}_{(RMS)}$

For more information, please refer to the following application notes related to the power losses :

- AN604: Calculation of conduction losses in a power rectifier
- AN4021: Calculation of reverse losses on a power diode

1.1 Characteristics (curves)

Figure 1. Average forward power dissipation versus average forward current (per diode)

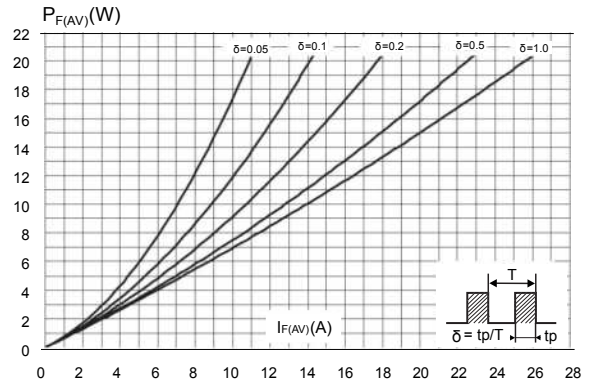

Figure 2. Average forward current versus ambient temperature (δ = 0.5, per diode)

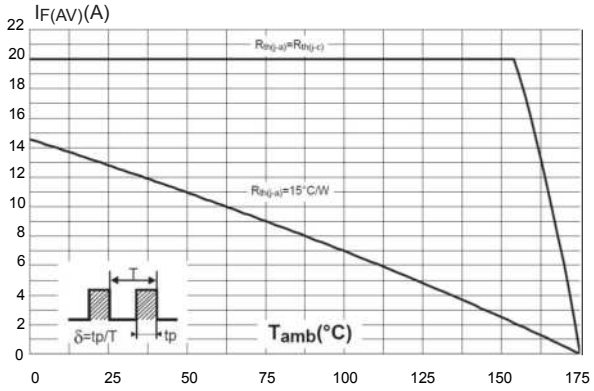

Figure 3. Normalized avalanche power derating versus pulse duration (T_j = 125 °C)

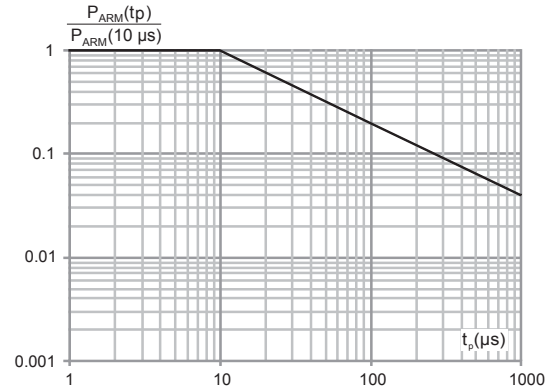

Figure 4. Relative variation of thermal impedance junction to case versus pulse duration

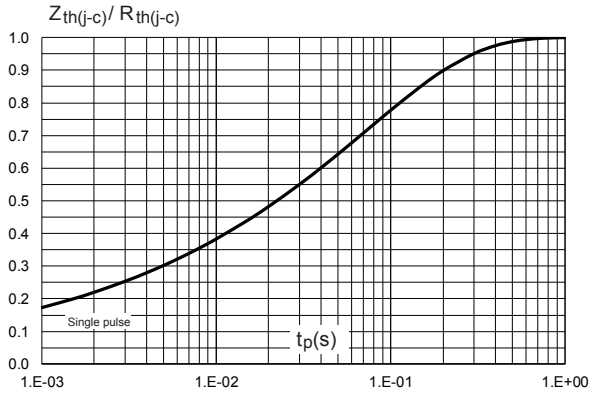

Figure 5. Reverse leakage current versus reverse voltage applied (typical values, per diode)

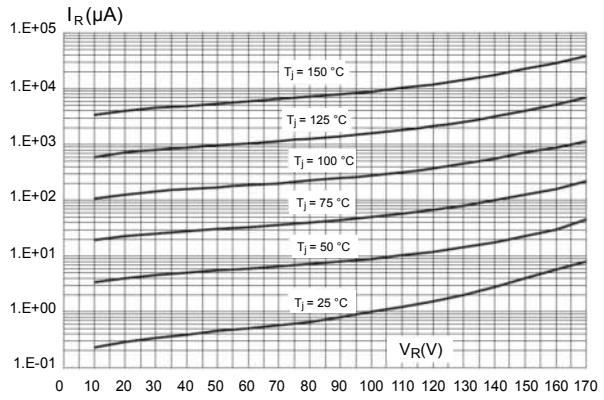

Figure 6. Junction capacitance versus reverse voltage applied (typical values, per diode)

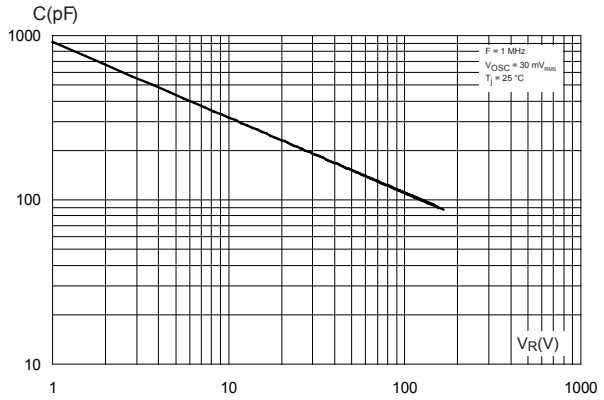

Figure 7. Forward voltage drop versus forward current (per diode)

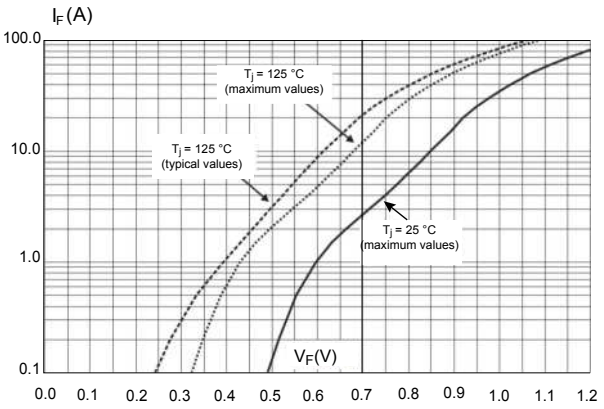

Figure 8. Thermal resistance junction to ambient versus copper surface under tab

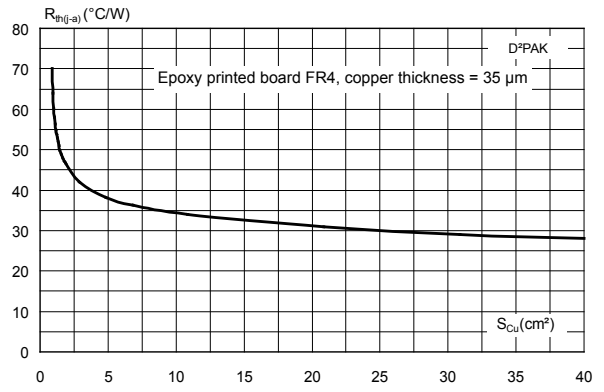

2 Package information

In order to meet environmental requirements, ST offers these devices in different grades of ECOPACK® packages, depending on their level of environmental compliance. ECOPACK® specifications, grade definitions and product status are available at: www.st.com. ECOPACK® is an ST trademark.

2.1 D²PAK package information

- Epoxy meets UL94, V0
- Cooling method: by conduction (C)

Figure 9. D²PAK package outline

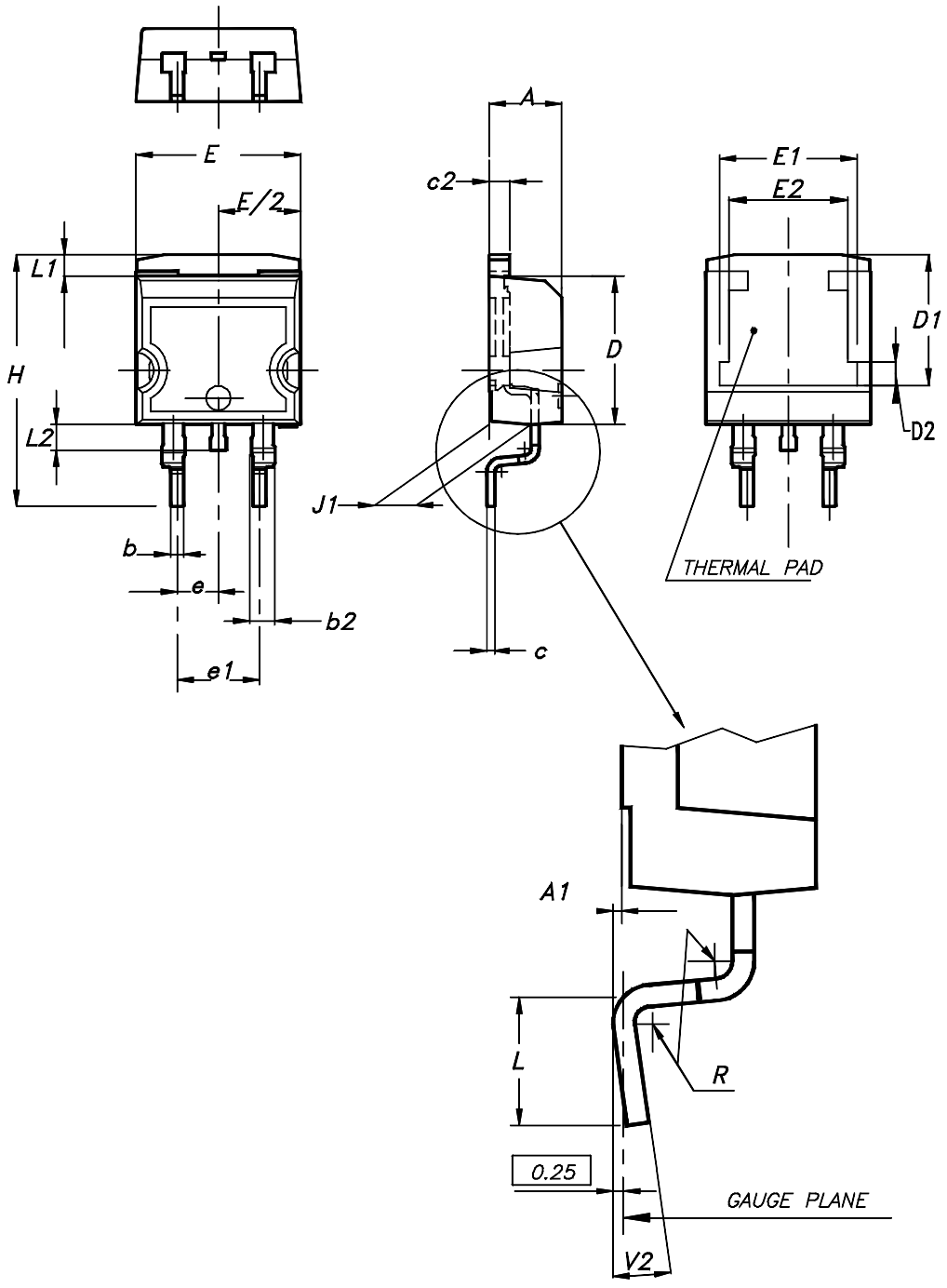

Note: This package drawing may slightly differ from the physical package. However, all the specified dimensions are guaranteed.

Table 4. **D²PAK package mechanical data**

Ref.	Dimensions			
	Millimeters		Inches	
	Min.	Max.	Min.	Max.
A	4.36	4.60	0.172	0.181
A1	0.00	0.25	0.000	0.010
b	0.70	0.93	0.028	0.037
b2	1.14	1.70	0.045	0.067
c	0.38	0.69	0.015	0.027
c2	1.19	1.36	0.047	0.053
D	8.60	9.35	0.339	0.368
D1	6.90	8.00	0.272	0.311
D2	1.10	1.50	0.043	0.060
E	10.00	10.55	0.394	0.415
E1	8.10	8.90	0.319	0.346
E2	6.85	7.25	0.266	0.282
e	2.54 typ.		0.100	
e1	4.88	5.28	0.190	0.205
H	15.00	15.85	0.591	0.624
J1	2.49	2.90	0.097	0.112
L	1.90	2.79	0.075	0.110
L1	1.27	1.65	0.049	0.065
L2	1.30	1.78	0.050	0.070
R	0.4 typ.		0.015	
V2	0°	8°	0°	8°

Figure 10. D²PAK recommended footprint (dimensions in mm)

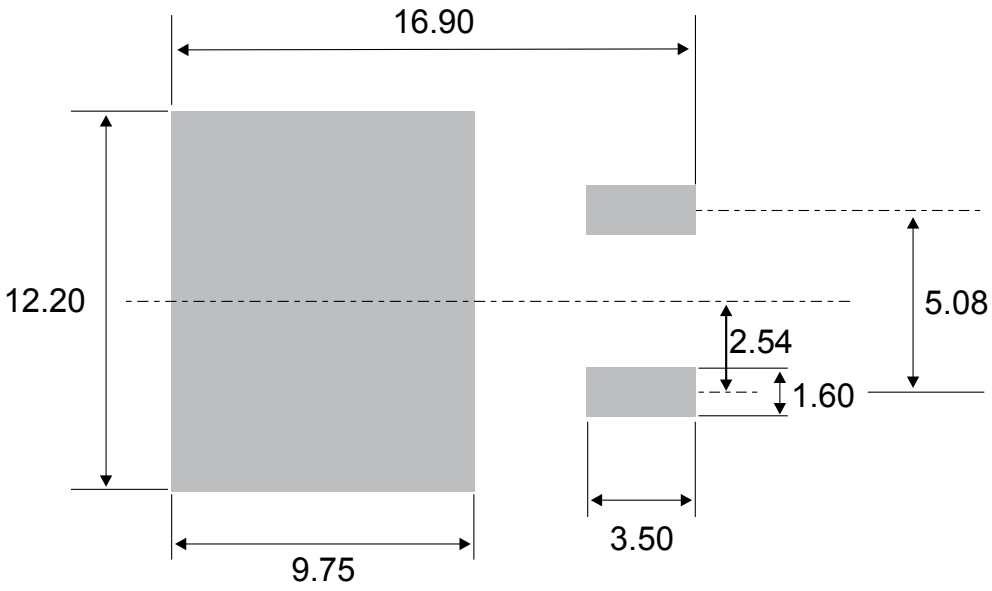

2.2 TO-247 package information

- Epoxy meets UL94, V0
- Cooling method: by conduction (C)
- Recommended torque value: 0.8 N·m
- Maximum torque value: 1.0 N·m

Figure 11. TO-247 package outline

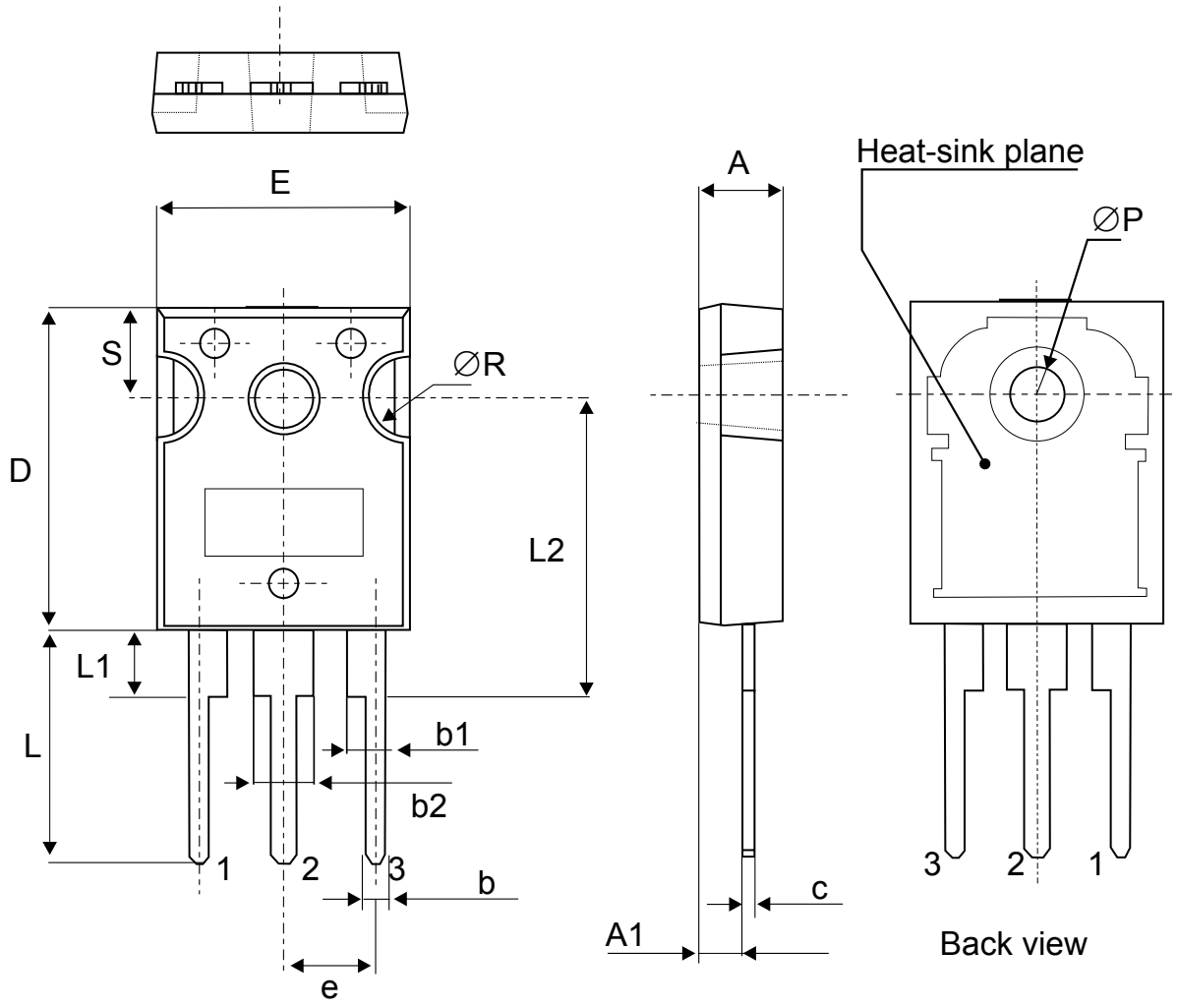

Table 5. **TO-247 package mechanical data**

Ref.	Dimensions					
	Millimeters			Inches		
	Min.	Typ.	Max.	Min.	Typ.	Max.
A	4.85		5.15	0.191		0.203
A1	2.20		2.60	0.086		0.102
b	1.00		1.40	0.039		0.055
b1	2.00		2.40	0.078		0.094
b2	3.00		3.40	0.118		0.133
c	0.40		0.80	0.015		0.031
D	19.85		20.15	0.781		0.793
E	15.45		15.75	0.608		0.620
e	5.30	5.45	5.60	0.209	0.215	0.220
L	14.20		14.80	0.559		0.582
L1	3.70		4.30	0.145		0.169
L2		18.50			0.728	
ØP	3.55		3.65	0.139		0.143
ØR	4.50		5.50	0.177		0.217
S	5.30	5.50	5.70	0.209	0.216	0.224

1. *Inches dimensions given for reference only*

2.3 TO-220AB package information

- Epoxy meets UL 94,V0
- Cooling method: by conduction (C)
- Recommended torque value: 0.55 N·m
- Maximum torque value: 0.70 N·m

Figure 12. TO-220AB package outline

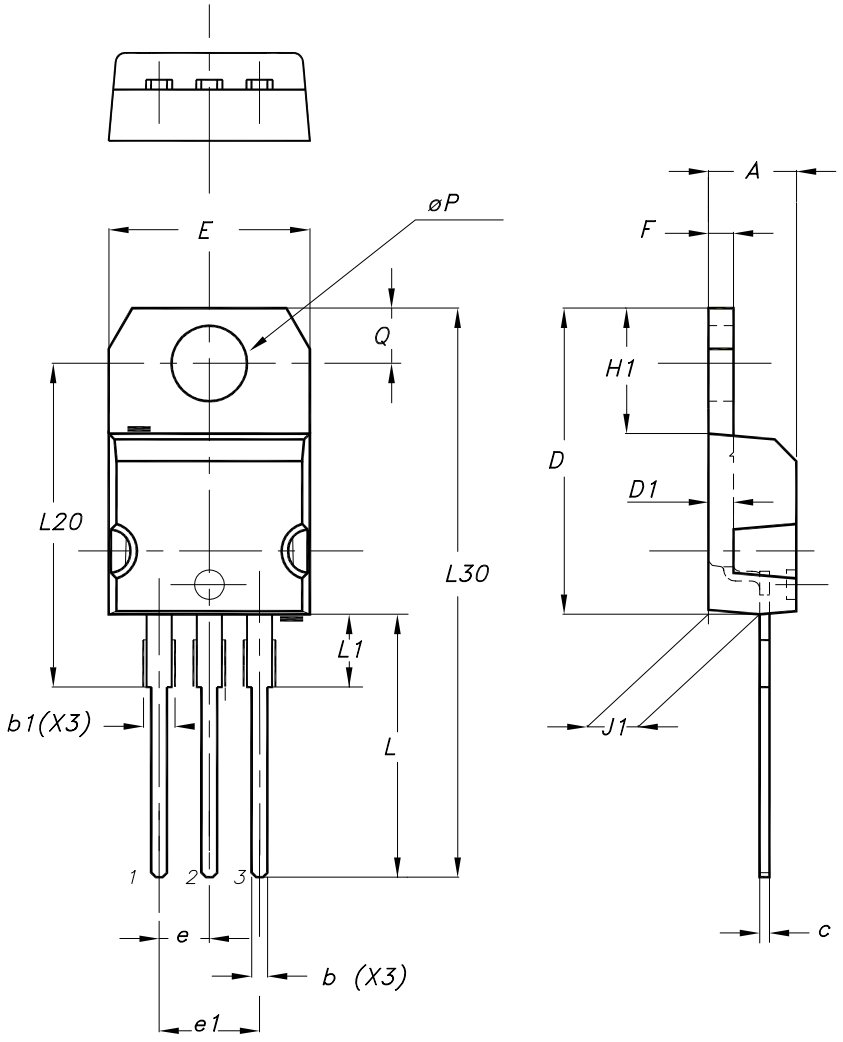

Table 6. TO-220AB package mechanical data

Ref.	Dimensions			
	Millimeters		Inches	
	Min.	Max.	Min.	Max.
A	4.40	4.60	0.173	0.181
b	0.61	0.88	0.240	0.035
b1	1.14	1.55	0.045	0.061

Ref.	Dimensions			
	Millimeters		Inches	
	Min.	Max.	Min.	Max.
c	0.48	0.70	0.019	0.028
D	15.25	15.75	0.600	0.620
D1	1.27 typ.		0.050 typ.	
E	10.00	10.40	0.394	0.409
e	2.40	2.70	0.094	0.106
e1	4.95	5.15	0.195	0.203
F	1.23	1.32	0.048	0.052
H1	6.20	6.60	0.244	0.260
J1	2.40	2.72	0.094	0.107
L	13.00	14.00	0.512	0.551
L1	3.50	3.93	0.138	0.155
L20	16.40 typ.		0.646 typ.	
L30	28.90 typ.		1.138 typ.	
θP	3.75	3.85	0.148	0.152
Q	2.65	2.95	0.104	0.116

3 Ordering information

Table 7. **Ordering information**

Order code	Marking	Package	Weight	Base qty.	Delivery mode
STPS40170CT	STPS40170CT	TO-220AB	1.95 g	50	Tube
STPS40170CG-TR	STPS40170CG	D^2PAK	1.38 g	10000	Tape and reel
STPS40170CW	STPS40170CW	TO-247	4.36 g	30	Tube

Revision history

Table 8. **Document revision history**

Date	Version	Changes
16-Sep-2005	1	Initial release.
01-Jun-2018	2	Updated P_{ARM} value and removed "Normalized avalanche power derating" curves.

IMPORTANT NOTICE – PLEASE READ CAREFULLY

STMicroelectronics NV and its subsidiaries (“ST”) reserve the right to make changes, corrections, enhancements, modifications, and improvements to ST products and/or to this document at any time without notice. Purchasers should obtain the latest relevant information on ST products before placing orders. ST products are sold pursuant to ST’s terms and conditions of sale in place at the time of order acknowledgement.

Purchasers are solely responsible for the choice, selection, and use of ST products and ST assumes no liability for application assistance or the design of Purchasers’ products.

No license, express or implied, to any intellectual property right is granted by ST herein.

Resale of ST products with provisions different from the information set forth herein shall void any warranty granted by ST for such product.

ST and the ST logo are trademarks of ST. All other product or service names are the property of their respective owners.

Information in this document supersedes and replaces information previously supplied in any prior versions of this document.

© 2018 STMicroelectronics – All rights reserved