PD57060S-E

RF POWER transistor, LdmoST plastic family N-channel enhancement-mode, lateral MOSFETs

Features

- Excellent thermal stability
- Common source configuration
- P_{OUT} = 60 W with 14.3dB gain @ 945 MHz/28 V
- New RF plastic package

Description

The device is a common source N-channel, enhancement-mode lateral field-effect RF power MOSFET. It is designed for high gain, broad band commercial and industrial applications. It operates at 28 V in common source mode at frequencies up to 1 GHz. The device boasts the excellent gain, linearity and reliability of ST's latest LDMOS technology mounted in the first true SMD plastic RF power package, PowerSO-10RF. Device's superior linearity performance makes it an ideal solution for base station applications. The PowerSO-10 plastic package, designed to offer high reliability, is the first ST JEDEC approved, high power SMD package. It has been specially optmized for RF needs and offers excellent RF performances and ease of assembly. Mounting recommendations are available in www.st.com/rf/ (look for application note AN1294).

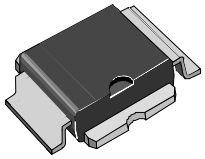

PowerSO-10RF (formed lead)

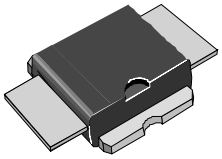

PowerSO-10RF (straight lead)

Figure 1. Pin connection

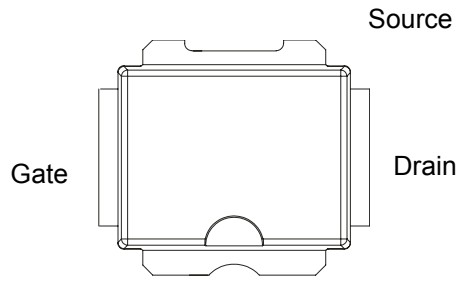

Table 1. Device summary

Order code	Package	Packing
PD57060-E	PowerSO-10RF (formed lead)	Tube
PD57060S-E	PowerSO-10RF (straight lead)	Tube
PD57060TR-E	PowerSO-10RF (formed lead)	Tape and reel
PD57060STR-E	PowerSO-10RF (straight lead)	Tape and reel

Contents

1 **Electrical data** 3

1.1 Maximum ratings 3

1.2 Thermal data 3

2 **Electrical characteristics** 4

2.1 Static 4

2.2 Dynamic 4

2.3 Moisture sensitivity level 4

3 **Impedances** 5

4 **Typical performance** 6

5 **Test circuit** 9

6 **Common source s-parameter** 12

7 **Package mechanical data** 15

8 **Revision history** 20

1 Electrical data

1.1 Maximum ratings

Table 2. Absolute maximum ratings (T_{CASE} = 25°C)

Symbol	Parameter	Value	Unit
$V_{(BR)DSS}$	Drain-Source Voltage	65	V
V_{GS}	Gate-Source Voltage	± 20	V
I_D	Drain Current	7	A
P_{DISS}	Power Dissipation (@ Tc = 70°C)	79	W
T_J	Max. Operating Junction Temperature	165	°C
T_{STG}	Storage Temperature	-65 to +150	°C

1.2 Thermal data

Table 3. Thermal data

Symbol	Parameter	Value	Unit
R_{thJC}	Junction - case thermal resistance	1.0	°C/W

2 Electrical characteristics

T_{CASE} = +25 °C

2.1 Static

Table 4. Static

Symbol	Test conditions			Min	Typ	Max	Unit
$V_{(BR)DSS}$	V_{GS} = 0	I_{DS} = 1 mA		65			V
I_{DSS}	V_{GS} = 0	V_{DS} = 28 V				1	µA
I_{GSS}	V_{GS} = 20 V	V_{DS} = 0 V				1	µA
$V_{GS(Q)}$	V_{DS} = 28 V	I_D = 100 mA		2.0		4.0	V
$V_{DS(ON)}$	V_{GS} = 10 V	I_D = 3 A			0.7	0.8	V
G_{FS}	V_{DS} = 10 V	I_D = 3 A		2.5			mho
C_{ISS}	V_{GS} = 0	V_{DS} = 28 V	f = 1 MHz		83		pF
C_{OSS}	V_{GS} = 0	V_{DS} = 28 V	f = 1 MHz		58		pF
C_{RSS}	V_{GS} = 0	V_{DS} = 28 V	f = 1 MHz		3		pF

2.2 Dynamic

Table 5. Dynamic

Symbol	Test conditions				Min	Typ	Max	Unit
P_{OUT}	V_{DD} = 28 V	I_{DQ} = 100 mA		f = 945MHz	60			W
G_{PS}	V_{DD} = 28 V	I_{DQ} = 100 mA	P_{OUT} = 60 W	f = 945MHz		14.3		dB
η_D	V_{DD} = 28 V	I_{DQ} = 100 mA	P_{OUT} = 60 W	f = 945MHz		54		%
Load Mismatch	V_{DD} = 28 V All Phase Angles	I_{DQ} = 100 mA	P_{OUT} = 60W	f = 945MHz	5:1			VSWR

2.3 Moisture sensitivity level

Table 6. Moisture sensitivity level

Test methodology	Rating
J-STD-020B	MSL 3

3 Impedances

Figure 2. Current conventions

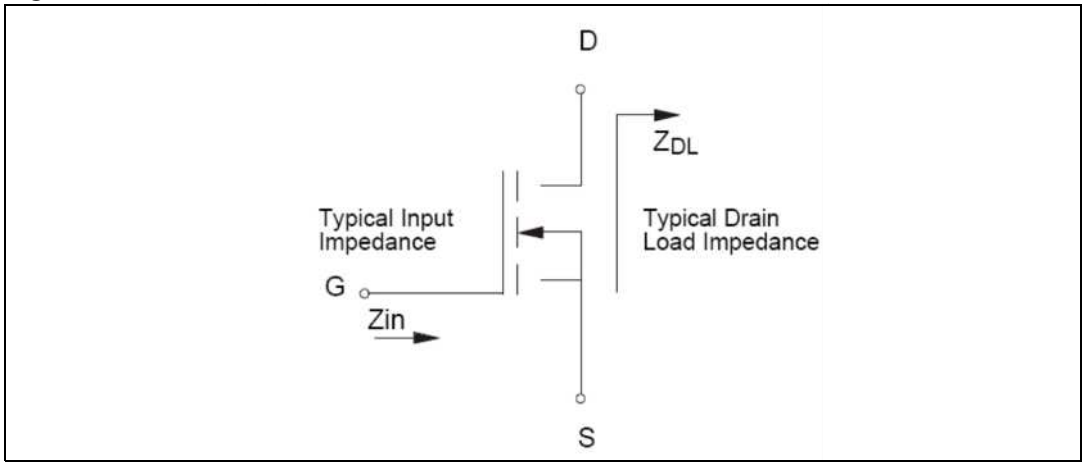

Table 7. Impedance data

Freq. (MHz)	Z_{IN} (Ω)	Z_{DL}(Ω)
890 MHz	0.646 + j 0.694	1.577 - j 0.997
925 MHz	0.568 + j 0.372	1.427 - j 1.459
945 MHz	0.705 + j 0.692	1.278 - j 1.935
960 MHz	0.591 + j 1.039	1.173 - j 2.464

4 Typical performance

Figure 3. Capacitance vs supply voltage

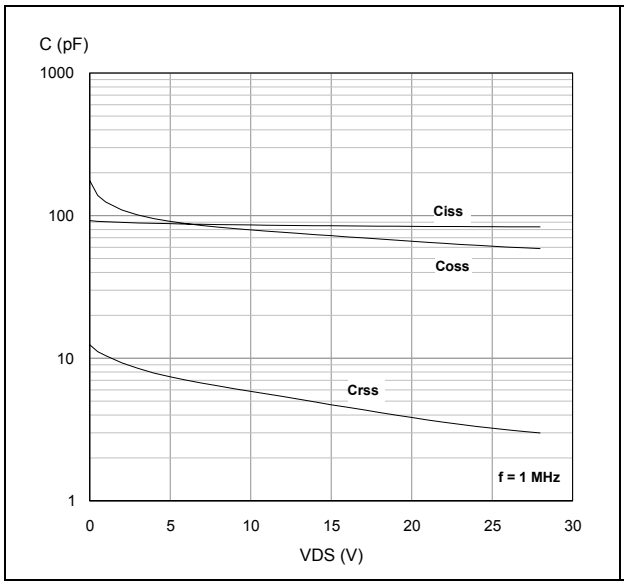

Figure 4. Drain current vs gate source voltage

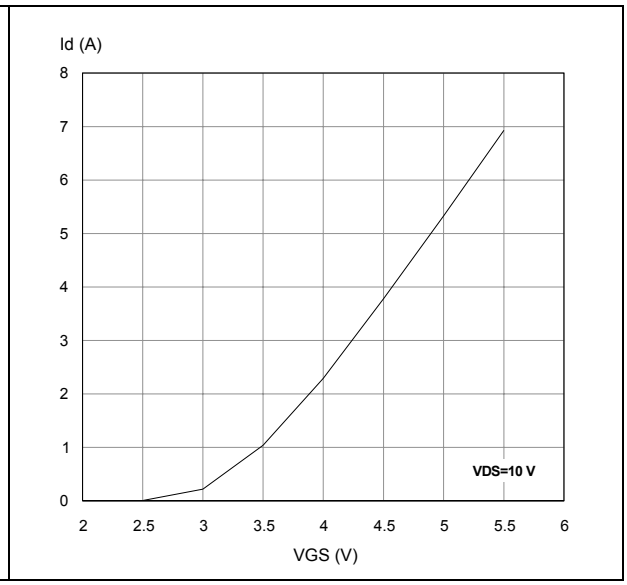

Figure 5. Gate-source voltage vs case temperature

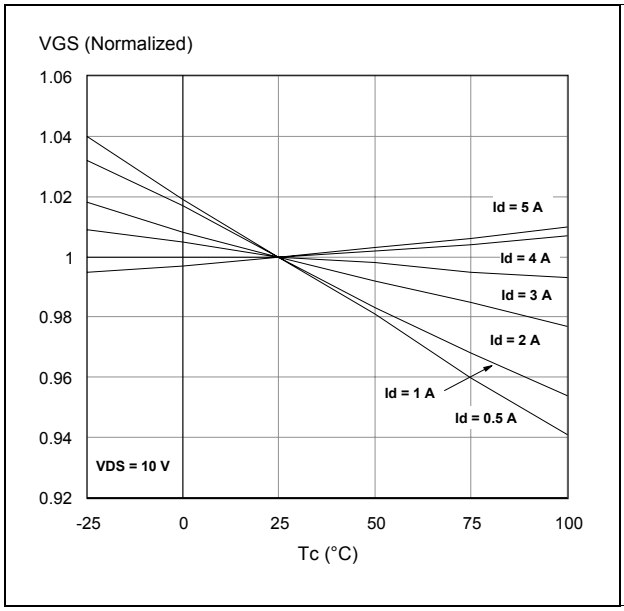

Figure 6. Output power vs input power

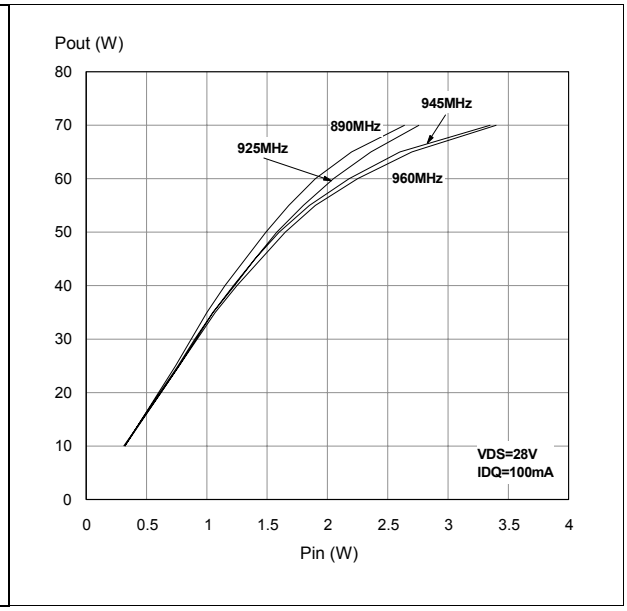

Figure 7. Power gain vs output power

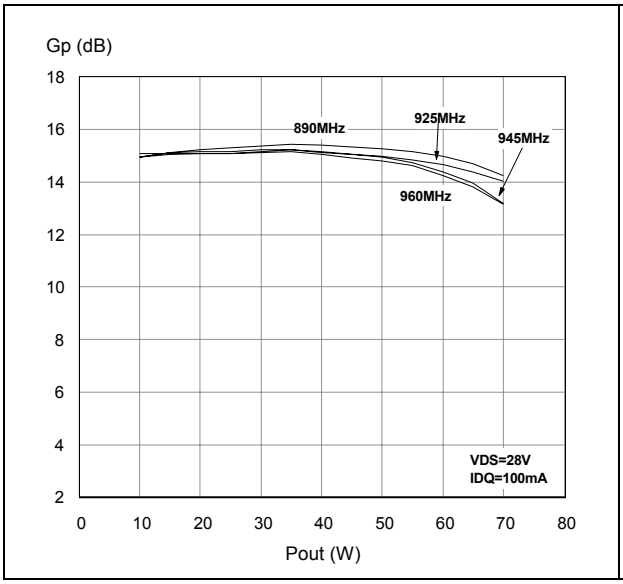

Figure 8. Drain efficiency vs output power

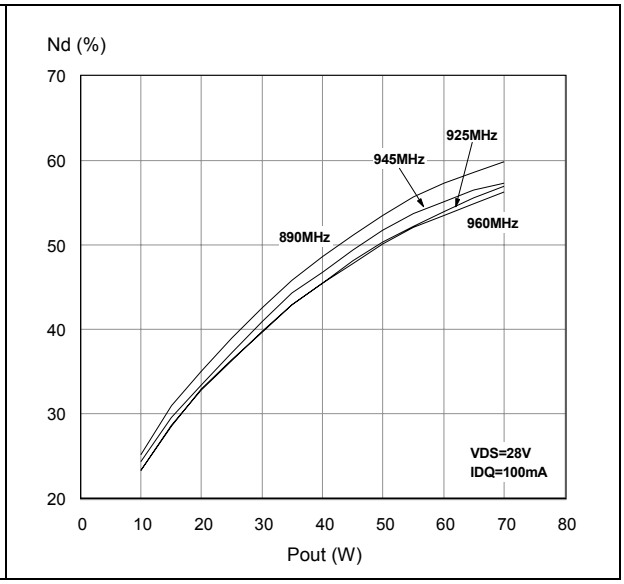

Figure 9. Input return loss vs output power

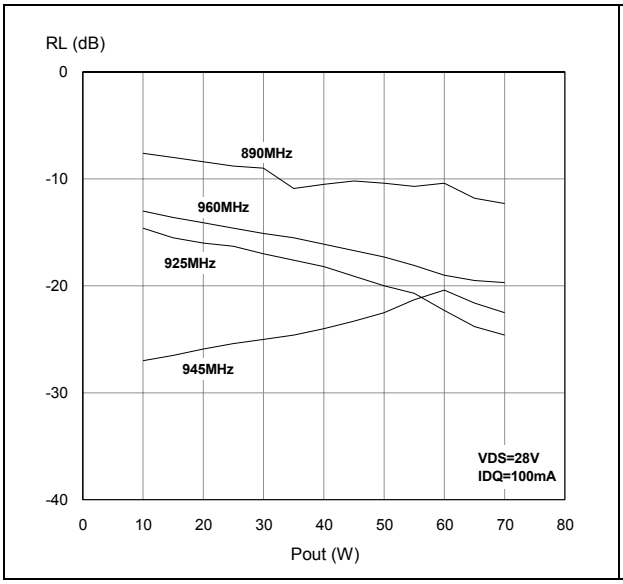

Figure 10. Output power vs bias current

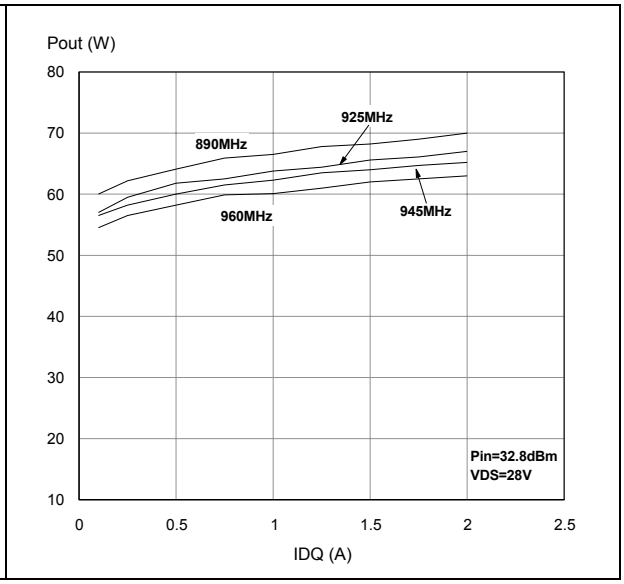

Figure 11. Drain efficiency vs bias current

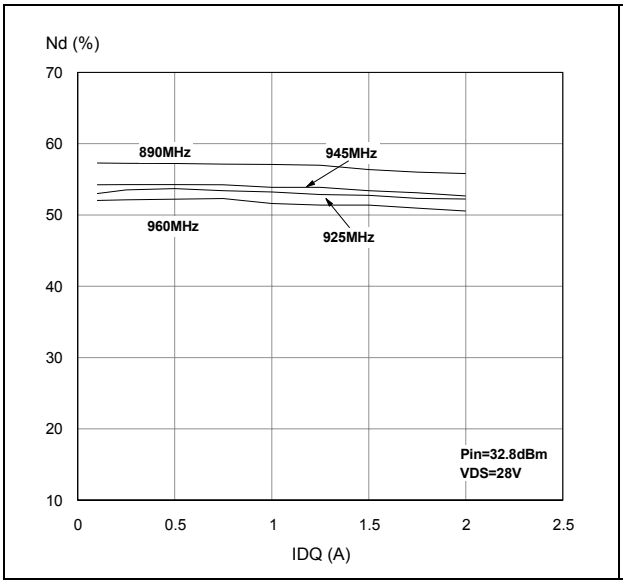

Figure 12. Output power vs supply voltage

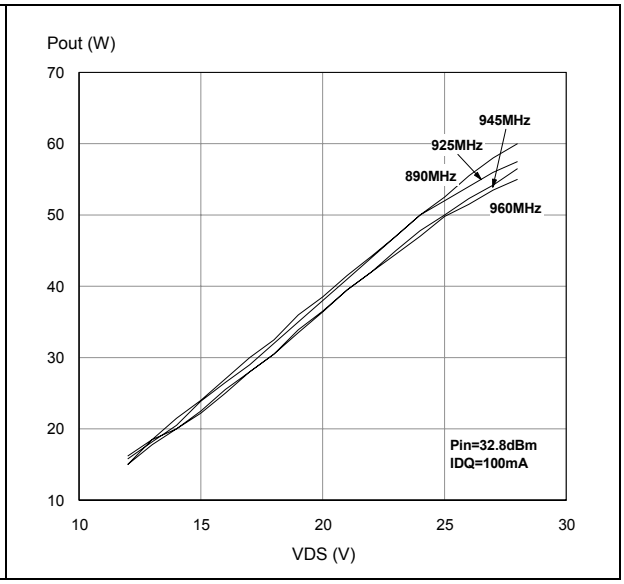

Figure 13. Drain efficiency vs supply voltage

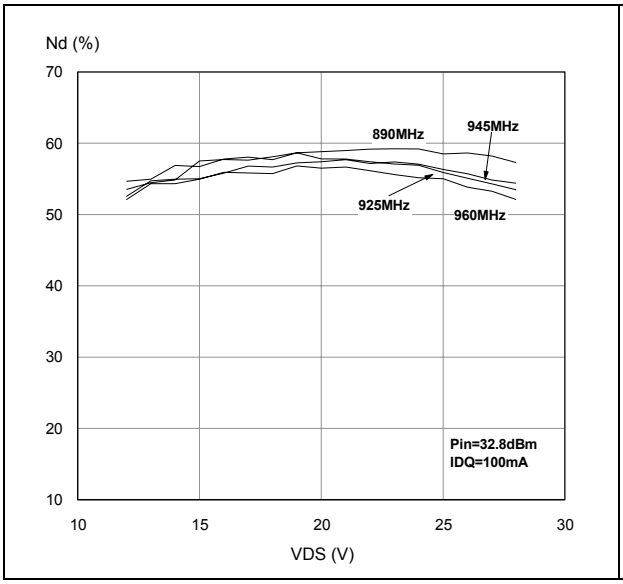

Figure 14. Output power vs gate-source voltage

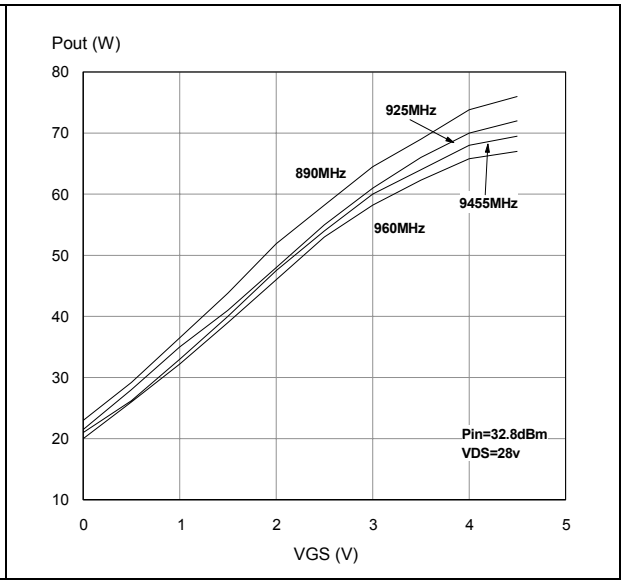

5 Test circuit

Figure 15. Test circuit schematic

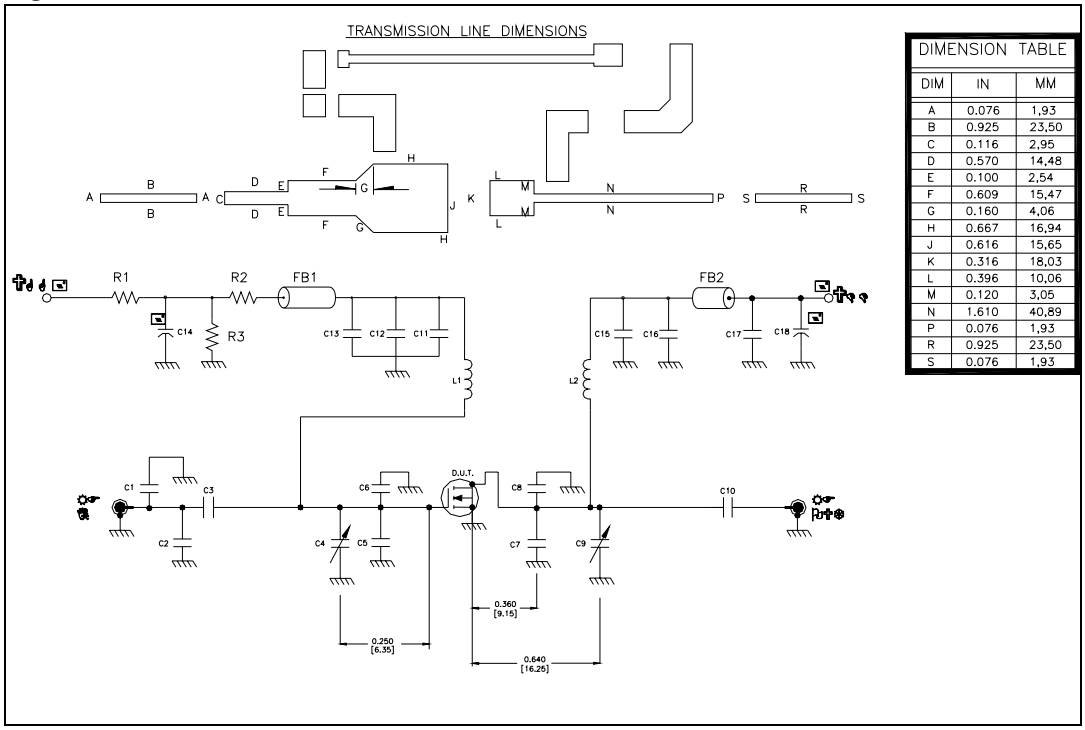

Note: 1 Dimensions at component symbols are reference for component placement.

2 Gap between ground & transmission line = 0.056 [1.42] +0.002 [0.05] -0.000 [0.00] typ.

3 Dimensions of input and output component from edge of transmission lines.

Table 8. Test circuit component part list

Component	Description
L1,L2	Inductor, 5 turns air wound #22AWG, ID 0.059{1.49}, nylon coated magnet WIRE
FB1,FB2	Shield bead surface mount EMI
R1	18 kΩ, 1 W surface mount chip resistor
R2	4.7 MΩ, 1 W surface mount chip resistor
R3	120 Ω, 2 W surface mount chip resistor
C1,C2	3 pF ATC 100B surface mount ceramic chip capacitor
C3,C10,C11,C15	47 pF ATC 100B surface mount ceramic chip capacitor
C4,C9	0.8-8.0 pF giga trim variable capacitor
C5,C6,C7,C8	7.5 pF ATC 100B surface mount ceramic chip capacitor
C12	1000 pF ATC 700B surface mount ceramic chip capacitor
C13,C17	0.1 µF, 500 V surface mount ceramic chip capacitor
C14	10 µF, 50 V aluminum electrolytic radial lead capacitor
C16	100 pF ATC 100B Surface mount ceramic chip capacitor
C18	220 µF, 63 V aluminum electrolytic radial lead capacitor
BOARD	Roger, ultra lam 2000, THK 0.030”, εr = 2.55 2oz. ED Cu 2 sides.

Figure 16. Test circuit

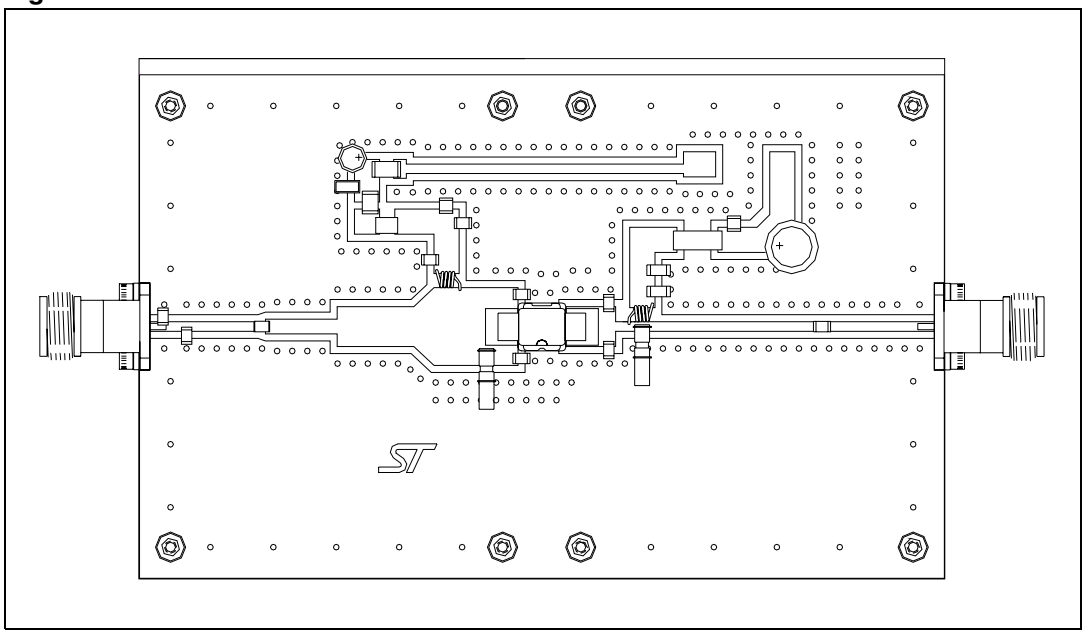

Figure 17. Test circuit photomaster

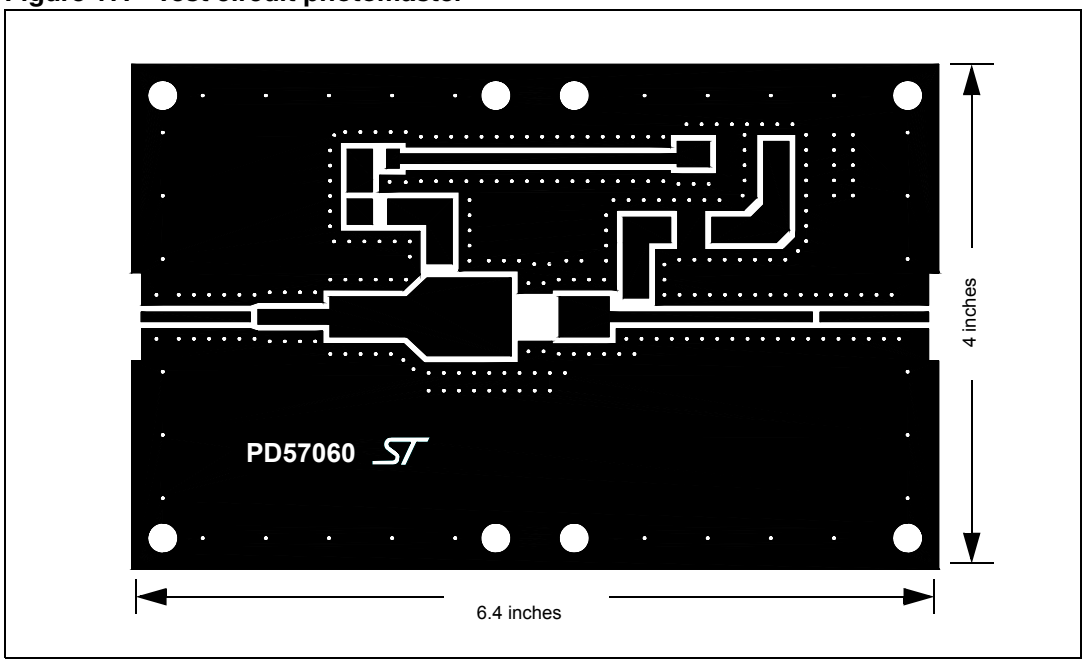

6 Common source s-parameter

Table 9. S-parameter for PD57060S-E (V_{DS} = 28 V I_{DS} = 1.5 A)

Freq (MHz)	$IS_{11}I$	S_{11} < Φ	$IS_{21}I$	S_{21}< Φ	$IS_{12}I$	S_{12}< Φ	$IS_{22}I$	S_{22}< Φ
150	0.876	-168	7.35	63	0.011	-19	0.744	-165
200	0.892	-170	5.08	54	0.011	-23	0.785	-166
250	0.912	-172	3.74	46	0.007	-32	0.823	-167
300	0.927	-173	2.84	39	0.007	-30	0.856	-168
350	0.938	-174	2.23	33	0.006	-30	0.880	-170
400	0.948	-175	1.79	28	0.004	-38	0.903	-171
450	0.956	-176	1.47	24	0.003	-34	0.922	-172
500	0.961	-177	1.22	20	0.003	-12	0.931	-173
550	0.966	-178	1.03	17	0.003	-17	0.938	-174
600	0.968	-179	0.88	14	0.002	-8	0.942	-175
650	0.971	-180	0.76	11	0.002	45	0.945	-176
700	0.974	180	0.67	9	0.003	47	0.954	-177
750	0.975	179	0.59	6	0.003	47	0.960	-178
800	0.976	178	0.52	4	0.003	75	0.963	-179
850	0.977	178	0.47	2	0.004	71	0.968	-180
900	0.977	177	0.42	0	0.005	65	0.971	180
950	0.979	177	0.38	-2	0.005	68	0.970	179
1000	0.978	176	0.34	-4	0.005	80	0.974	179
1050	0.978	176	0.31	-5	0.007	76	0.969	178
1100	0.978	175	0.29	-7	0.007	77	0.972	178
1150	0.978	175	0.27	-8	0.007	78	0.971	177
1200	0.977	174	0.24	-10	0.008	80	0.973	176
1250	0.976	174	0.23	-11	0.008	77	0.974	176
1300	0.974	173	0.21	-13	0.009	74	0.971	175
1350	0.974	173	0.19	-14	0.009	76	0.969	175
1400	0.972	172	0.18	-16	0.009	81	0.970	174
1450	0.971	172	0.17	-16	0.010	86	0.968	174
1500	0.968	171	0.15	-17	0.010	91	0.967	173

Table 10. S-parameter PD57060S-E (V_{DS} = 28 V I_{DS} = 150 mA)

Freq (MHz)	$IS_{11}I$	S_{11} < Φ	$IS_{21}I$	S_{21}< Φ	$IS_{12}I$	S_{12}< Φ	$IS_{22}I$	S_{22}< Φ
150	0.881	-168	7.27	64	0.011	-20	0.744	-165
200	0.897	-170	5.03	54	0.009	-47	0.792	-166
250	0.915	-172	3.71	46	0.007	-32	0.823	-167
300	0.929	-173	2.82	39	0.007	-28	0.856	-168
350	0.939	-174	2.21	34	0.006	-30	0.879	-170
400	0.949	-175	1.78	29	0.004	-39	0.902	-171
450	0.956	-176	1.46	24	0.002	-30	0.920	-172
500	0.961	-177	1.21	20	0.003	-11	0.929	-173
550	0.966	-178	1.02	17	0.003	-16	0.937	-174
600	0.969	-179	0.87	14	0.001	-2	0.940	-175
650	0.972	-180	0.75	11	0.002	54	0.944	-176
700	0.974	180	0.66	8	0.003	47	0.953	-177
750	0.975	179	0.58	6	0.003	49	0.957	-178
800	0.976	178	0.51	4	0.003	78	0.962	-179
850	0.977	178	0.46	2	0.004	73	0.966	-180
900	0.977	177	0.41	0	0.005	64	0.969	180
950	0.979	177	0.37	-2	0.005	69	0.970	179
1000	0.978	176	0.34	-4	0.005	79	0.972	179
1050	0.979	175	0.31	-6	0.007	75	0.971	178
1100	0.978	175	0.28	-7	0.007	77	0.972	178
1150	0.977	175	0.26	-9	0.007	77	0.971	177
1200	0.977	174	0.24	-10	0.008	80	0.972	176
1250	0.975	174	0.22	-12	0.009	77	0.973	176
1300	0.974	173	0.20	-13	0.009	75	0.970	175
1350	0.974	173	0.19	-15	0.009	76	0.968	175
1400	0.972	172	0.18	-16	0.009	81	0.969	174
1450	0.971	172	0.16	-17	0.010	86	0.967	174
1500	0.969	171	0.15	-18	0.010	-89	0.968	173

Table 11. S-parameter for PD57060S-E (V_{DS} = 13.5 V I_{DS} = 75 mA)

Freq (MHz)	$IS_{11}I$	S_{11} < Φ	$IS_{21}I$	S_{21}< Φ	$IS_{12}I$	S_{12}< Φ	$IS_{22}I$	S_{22}< Φ
150	0.880	-173	4.67	69	0.012	-17	0.829	-174
200	0.891	-173	3.36	61	0.013	-33	0.848	-174
250	0.904	-175	2.54	55	0.010	-26	0.868	-175
300	0.915	-175	1.99	49	0.009	-20	0.881	-175
350	0.924	-176	1.61	43	0.009	-28	0.894	-176
400	0.933	-177	1.32	38	0.007	-36	0.909	-176
450	0.940	-177	1.10	34	0.005	-27	0.915	-177
500	0.946	-178	0.93	30	0.005	-24	0.926	-178
550	0.953	-179	0.80	27	0.005	-28	0.937	-178
600	0.956	-179	0.69	23	0.004	-24	0.942	-179
650	0.961	-180	0.61	20	0.003	-5	0.949	-180
700	0.964	179	0.53	18	0.004	10	0.954	180
750	0.966	179	0.48	15	0.003	4	0.955	179
800	0.967	178	0.43	13	0.002	43	0.960	178
850	0.968	178	0.38	11	0.004	51	0.956	178
900	0.971	177	0.35	9	0.004	43	0.962	177
950	0.971	177	0.32	7	0.004	55	0.966	176
1000	0.971	176	0.29	5	0.004	70	0.968	176
1050	0.975	175	0.26	4	0.006	68	0.971	175
1100	0.973	175	0.24	2	0.006	63	0.970	175
1150	0.974	175	0.22	0	0.006	67	0.971	174
1200	0.973	174	0.21	-1	0.006	74	0.972	174
1250	0.973	174	0.19	-3	0.007	73	0.969	174
1300	0.971	173	0.18	-4	0.008	70	0.967	173
1350	0.970	173	0.17	-5	0.008	77	0.967	172
1400	0.969	172	0.15	-6	0.009	82	0.965	172
1450	0.968	172	0.14	-6	0.010	84	0.966	171
1500	0.967	171	0.13	-7	0.010	89	0.967	171

7 Package mechanical data

In order to meet environmental requirements, ST offers these devices in different grades of ECOPACK® packages, depending on their level of environmental compliance. ECOPACK® specifications, grade definitions and product status are available at: *www.st.com*.
ECOPACK® is an ST trademark.

Table 12. PowerSO-10RF formed lead (gull wing) mechanical data

Dim.	mm.			Inch		
	Min.	Typ.	Max.	Min.	Typ.	Max.
A1	0	0.05	0.1	0.	0.0019	0.0038
A2	3.4	3.5	3.6	0.134	0.137	0.142
A3	1.2	1.3	1.4	0.046	0.05	0.054
A4	0.15	0.2	0.25	0.005	0.007	0.009
a		0.2			0.007	
b	5.4	5.53	5.65	0.212	0.217	0.221
c	0.23	0.27	0.32	0.008	0.01	0.012
D	9.4	9.5	9.6	0.370	0.374	0.377
D1	7.4	7.5	7.6	0.290	0.295	0.298
E	13.85	14.1	14.35	0.544	0.555	0.565
E1	9.3	9.4	9.5	0.365	0.37	0.375
E2	7.3	7.4	7.5	0.286	0.292	0.294
E3	5.9	6.1	6.3	0.231	0.24	0.247
F		0.5			0.019	
G		1.2			0.047	
L	0.8	1	1.1	0.030	0.039	0.042
R1			0.25			0.01
R2		0.8			0.031	
T	2 deg	5 deg	8 deg	2 deg	5 deg	8 deg
T1		6 deg			6 deg	
T2		10 deg			10 deg	

Note: Resin protrusions not included (max value: 0.15 mm per side)

Figure 18. Package dimensions for PowerSO-10RF formed lead

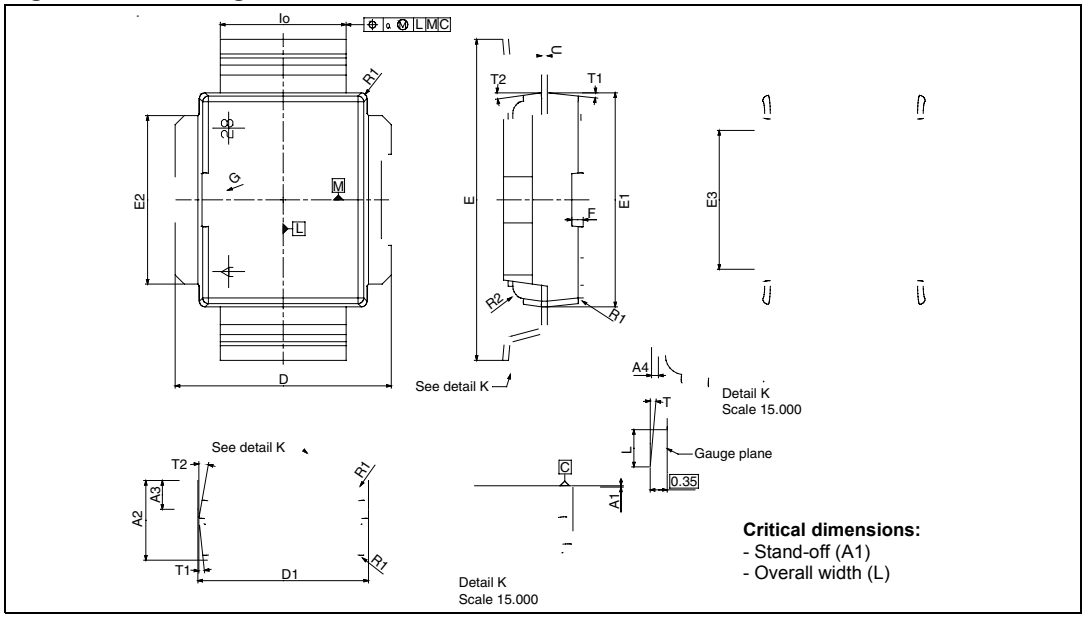

Table 13. PowerSO-10RF straight lead mechanical data

Dim	mm			Inch		
	Min	Typ	Max	Min	Typ	Max
A1	1.62	1.67	1.72	0.064	0.065	0.068
A2	3.4	3.5	3.6	0.134	0.137	0.142
A3	1.2	1.3	1.4	0.046	0.05	0.054
A4	0.15	0.2	0.25	0.005	0.007	0.009
a		0.2			0.007	
b	5.4	5.53	5.65	0.212	0.217	0.221
c	0.23	0.27	0.32	0.008	0.01	0.012
D	9.4	9.5	9.6	0.370	0.374	0.377
D1	7.4	7.5	7.6	0.290	0.295	0.298
E	15.15	15.4	15.65	0.595	0.606	0.615
E1	9.3	9.4	9.5	0.365	0.37	0.375
E2	7.3	7.4	7.5	0.286	0.292	0.294
E3	5.9	6.1	6.3	0.231	0.24	0.247
F		0.5			0.019	
G		1.2			0.047	
R1			0.25			0.01
R2		0.8			0.031	
T1		6 deg			6 deg	
T2		10 deg			10 deg	

Note: Resin protrusions not included (max value: 0.15 mm per side)

Figure 19. Package dimensions for PowerSO-10RF straight lead

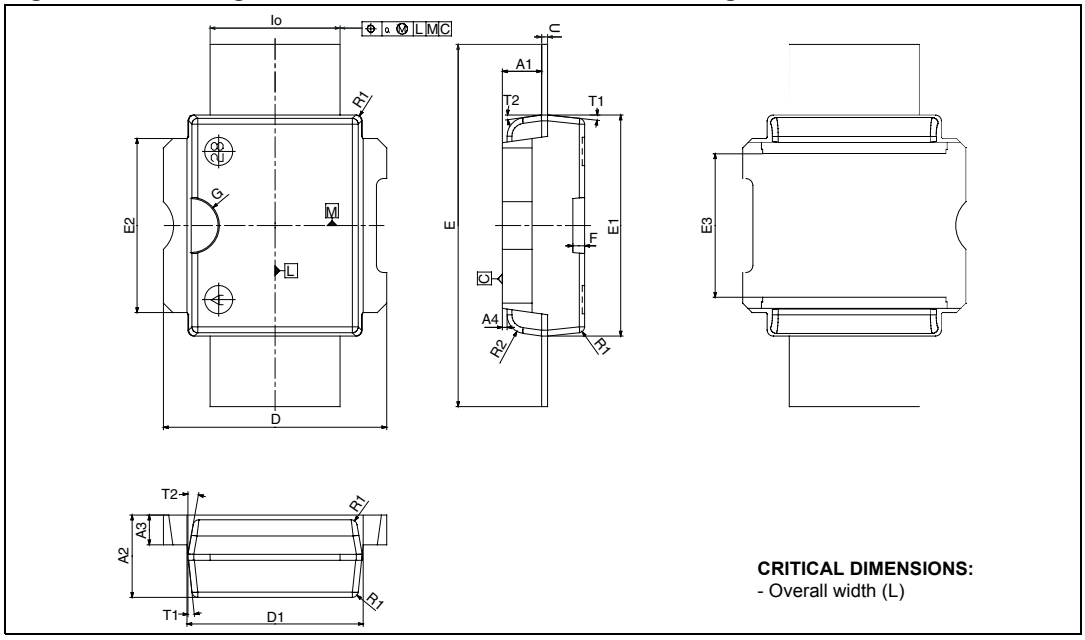

Figure 20. Tube information

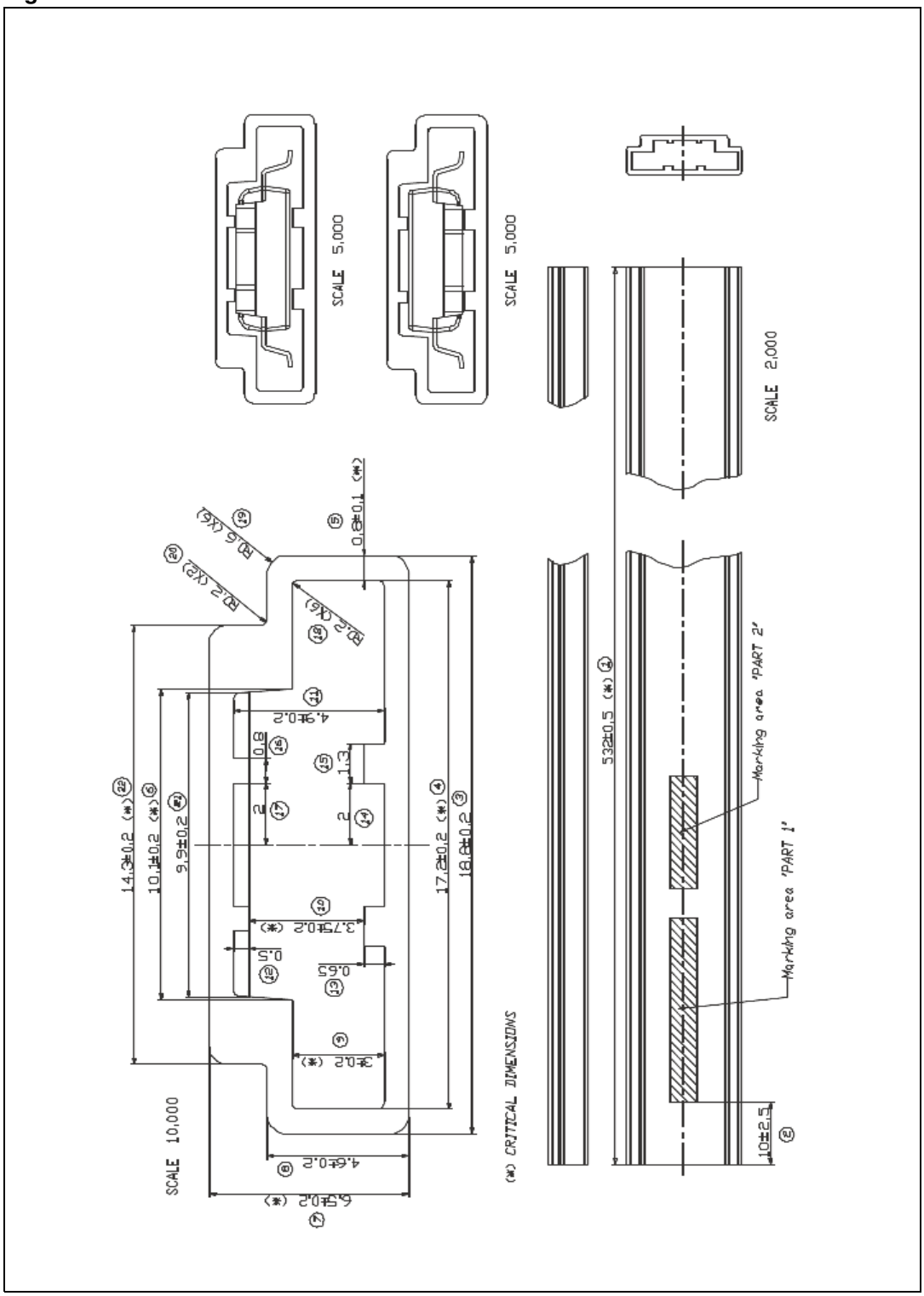

Figure 21. Reel information

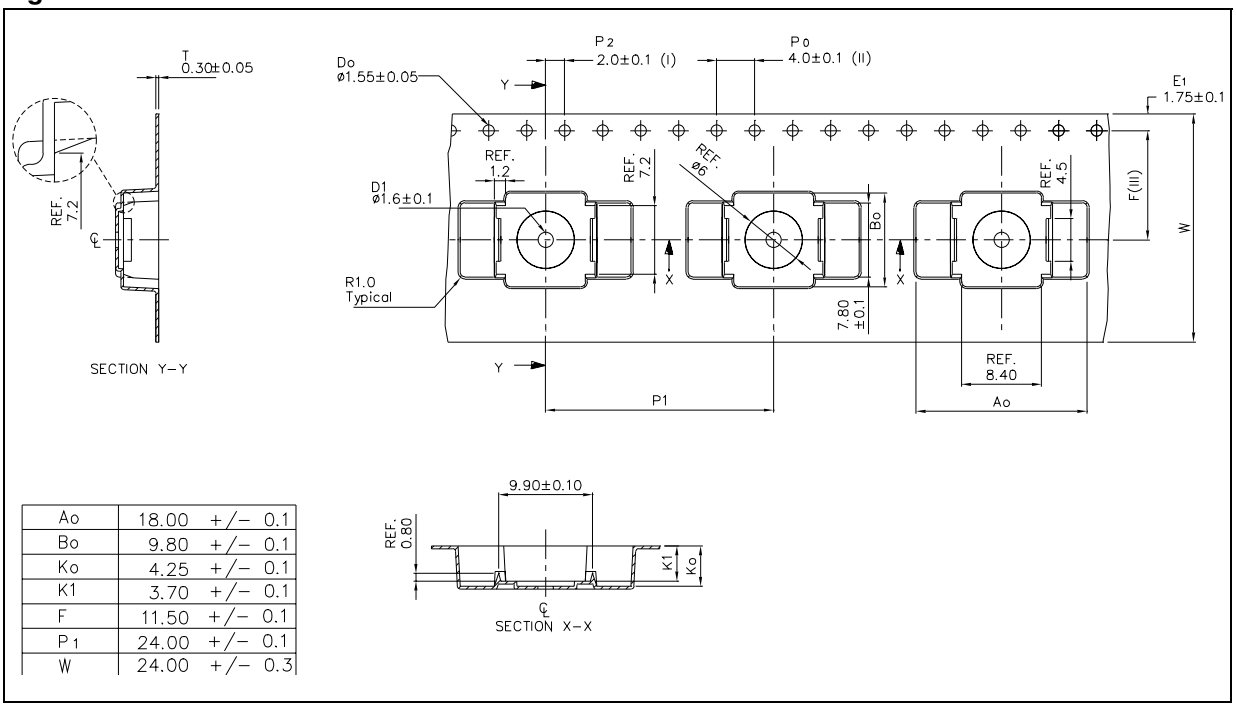

Ao	18.00	+/−	0.1
Bo	9.80	+/−	0.1
Ko	4.25	+/−	0.1
K1	3.70	+/−	0.1
F	11.50	+/−	0.1
P1	24.00	+/−	0.1
W	24.00	+/−	0.3

8 Revision history

Table 14. Document revision history

Date	Revision	Changes
03-Nov-2005	1	First Issue.
13-Jul-2006	2	New template, added lead free info
23-Jan-2007	3	Update $V_{GS(Q)}$ in *Table 4.*
03-Jun-2010	4	Added: *Table 6: Moisture sensitivity level*.

Please Read Carefully:

Information in this document is provided solely in connection with ST products. STMicroelectronics NV and its subsidiaries (“ST”) reserve the right to make changes, corrections, modifications or improvements, to this document, and the products and services described herein at any time, without notice.

All ST products are sold pursuant to ST’s terms and conditions of sale.

Purchasers are solely responsible for the choice, selection and use of the ST products and services described herein, and ST assumes no liability whatsoever relating to the choice, selection or use of the ST products and services described herein.

No license, express or implied, by estoppel or otherwise, to any intellectual property rights is granted under this document. If any part of this document refers to any third party products or services it shall not be deemed a license grant by ST for the use of such third party products or services, or any intellectual property contained therein or considered as a warranty covering the use in any manner whatsoever of such third party products or services or any intellectual property contained therein.

UNLESS OTHERWISE SET FORTH IN ST’S TERMS AND CONDITIONS OF SALE ST DISCLAIMS ANY EXPRESS OR IMPLIED WARRANTY WITH RESPECT TO THE USE AND/OR SALE OF ST PRODUCTS INCLUDING WITHOUT LIMITATION IMPLIED WARRANTIES OF MERCHANTABILITY, FITNESS FOR A PARTICULAR PURPOSE (AND THEIR EQUIVALENTS UNDER THE LAWS OF ANY JURISDICTION), OR INFRINGEMENT OF ANY PATENT, COPYRIGHT OR OTHER INTELLECTUAL PROPERTY RIGHT.

UNLESS EXPRESSLY APPROVED IN WRITING BY AN AUTHORIZED ST REPRESENTATIVE, ST PRODUCTS ARE NOT RECOMMENDED, AUTHORIZED OR WARRANTED FOR USE IN MILITARY, AIR CRAFT, SPACE, LIFE SAVING, OR LIFE SUSTAINING APPLICATIONS, NOR IN PRODUCTS OR SYSTEMS WHERE FAILURE OR MALFUNCTION MAY RESULT IN PERSONAL INJURY, DEATH, OR SEVERE PROPERTY OR ENVIRONMENTAL DAMAGE. ST PRODUCTS WHICH ARE NOT SPECIFIED AS "AUTOMOTIVE GRADE" MAY ONLY BE USED IN AUTOMOTIVE APPLICATIONS AT USER’S OWN RISK.

Resale of ST products with provisions different from the statements and/or technical features set forth in this document shall immediately void any warranty granted by ST for the ST product or service described herein and shall not create or extend in any manner whatsoever, any liability of ST.

ST and the ST logo are trademarks or registered trademarks of ST in various countries.

Information in this document supersedes and replaces all information previously supplied.

The ST logo is a registered trademark of STMicroelectronics. All other names are the property of their respective owners.

© 2010 STMicroelectronics - All rights reserved

STMicroelectronics group of companies

Australia - Belgium - Brazil - Canada - China - Czech Republic - Finland - France - Germany - Hong Kong - India - Israel - Italy - Japan - Malaysia - Malta - Morocco - Philippines - Singapore - Spain - Sweden - Switzerland - United Kingdom - United States of America

www.st.com