STLD40D

White LED power supply for large display backlight

Features

- Inductor switches boost controller
- PFM mode control
- High efficiency over wide range of input voltage from 3.0 V to 5.5 V
- Over voltage protection with automatic restart
- Adjustable peak current limit
- Enable pin with possibility of PWM dimming control
- Low shutdown current < 1 µA
- Small external component
- Good load and line regulation
- QFN8 3 x 3 mm

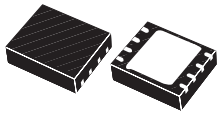

QFN8 (3 x 3 mm)

Applications

- White LED supply for LCD backlight
- Mobile phone
- PDA and organizers
- Any handsets powered form 3.0 V to 5.5 V

Description

STLD40D is a boost converter that operates from 3.0 V to 5.5 V. It can provide an output voltage as high as 37 V and can drive up to 10 white LEDs in series. The converter is a PFM (pulse frequency modulation) inductor switch that can work in discontinuous (DCM) mode operation. A minimum OFF time of the embedded boost switch T_{SW} is fixed internally and allows limiting the switching frequency. The output current capability is 20 mA with an output voltage of 37 V. The regulation is done by sensing the LED current through the resistor R_{LED}. The device can be turned ON/OFF through the logic enable signal pin EN. By applying a low frequency PWM signal the LEDs can be dimmed. The maximum peak inductor current can be programmed by connected a resistor R_{SET} to the pin R_{SET}.

Table 1. Device summary

Order code	Package	Packaging
STLD40DPUR	QFN8 (3 x 3 mm)	3000 parts per reel

Contents

1 Block diagram 3

2 Pin configuration 4

3 Maximum ratings 5

4 Electrical characteristics 6

5 Functional description 7

5.1 Boost controller 7

5.2 Adjustable peak inductor current limit 7

5.3 Enable 7

5.4 OVP 7

6 Typical application 8

7 Typical performance characteristics 9

8 Package mechanical data 11

9 Revision history 15

1 Block diagram

Figure 1. Block diagram

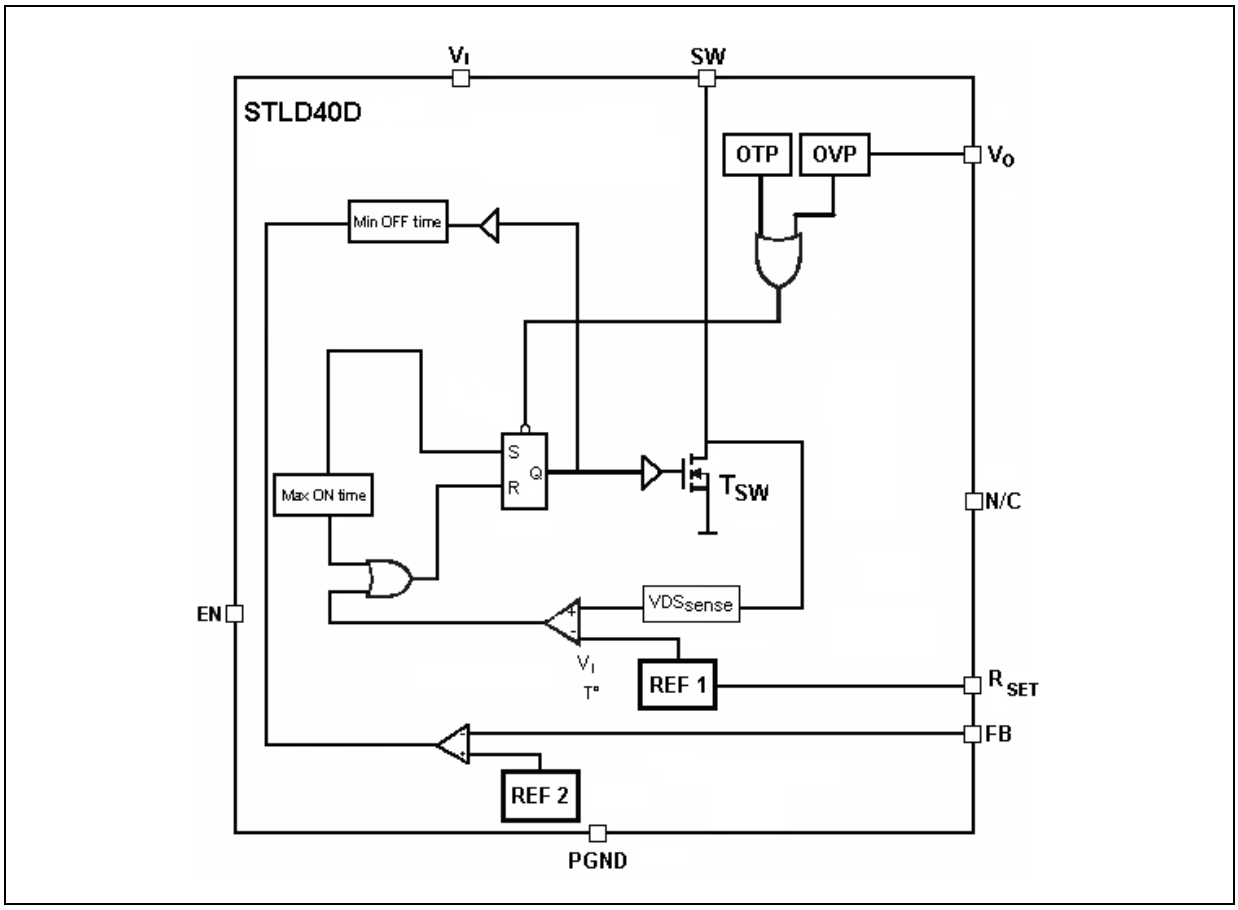

2 Pin configuration

Figure 2. Pin connections (top through view)

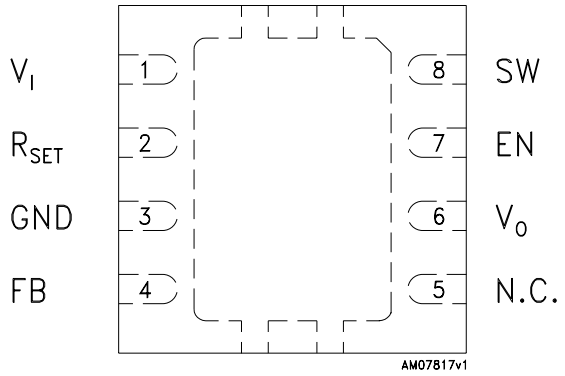

Table 2. Pin description

Pin n°	Symbol	Note
1	V_I	Supply voltage
2	R_{SET}	Peak inductor current adjust
3	GND	Analog ground
4	FB	Feedback for the LED current regulation
5	N.C.	Not connected
6	V_O	Output voltage for LED supply
7	EN	IC enable signal
8	SW	Boost switch drain
	PGND	Power ground

3 Maximum ratings

Table 3. Absolute maximum ratings

Symbol	Parameter	Value	Unit
$VB_{SW,}$ VB_O	Breakdown voltage at V_O and SW pin	44	V
EN	Maximum voltage applied on pin EN	V_I	V
V_I	Supply voltage range	6	V
V_{ESD}	ESD ratings - (HBM MIL STD 883C)	2	kV
T_{OP}	Operating temperature	- 40 to 85	°C
T_{STG}	Storage temperature range	- 65 to 150	°C

Table 4. Thermal data

Symbol	Parameter	Value	Unit
R_{thJA}	Thermal resistance junction-ambient	52	°C/W

4 Electrical characteristics

T_J = - 40 °C to 85 °C, V_I = 3.6 V, V_{EN} = 3 V, C_I = 2.2 µF, C_O = 4.7 µF, L = 4.7 µH, R_{LED} = 8 Ω V_O = 32 V, typ. values @ 25 °C, unless otherwise specified.

Table 5. Electrical characteristics

Symbol	Parameter	Test conditions	Min.	Typ.	Max.	Unit
V_I	Input voltage range		3.0		5.5	V
V_O	Output voltage range		V_I		37	V
I_O	Regulated output current	V_O = 36 V (10 white LEDs)	20			mA
I_{SD}	Stand-by current	V_{EN} = Low, V_I = 3.6 V, T_J = 25 °C		1	3	µA
		V_{EN} = Low, V_I = 3 V to 4.2 V			10	
I_Q	Quiescent current	V_I = 3 V to 4.2 V, T_J = 25 °C		0.4	0.8	mA
		V_I = 5.5 V, T_J = 25 °C		0.8	1.2	
R_{DSON}	Boost switch R_{DSON}	V_I = 5.5 V, I = 100 mA		0.4		Ω
		V_I = 4.2 V, I = 100 mA		0.4		
		V_I = 3.0 V, I = 100 mA		0.5		
	BVDS breakdown voltage		38			V
$I_{LIM-ADJ}$	Maximum peak inductor limit adjust range (1)	R_{SET} = 12 kΩ to 100 kΩ	0.2		1	A
I_{LIM}	Maximum peak inductor limit when R_{SET} = V_I (1)	V_I = 3 V to 5.5 V	0.75		1.1	A
V_{FB}	Feedback voltage	V_I = 3.6 V	130	165	200	mV
Line FB	Line feedback voltage	V_I = 3 V to 5.5 V		5	35	mV
T_{ON_MAX}	Maximum ON time	V_I = 4.2 V		5.5		µs
T_{OFF_MIN}	Minimum OFF time	V_I = 4.2 V		250		ns
ν	Efficiency at V_I = 3.0 V_{DC} (1)	I_O = 20 mA, V_O = 36 V_{DC}	75			%
	Efficiency at V_I = 5.5 V_{DC} (1)	I_O = 20 mA, V_O = 36 V_{DC}	80			
OVP	Over voltage protection		36		42	V
OV_{HYS}	Over voltage hysteresis			1.5		V
V_{EN}	Enable input logic low	Disable Low V_{IL}			0.3	V
	Enable input logic high	Enable High V_{IH}	1.2			

1. Guaranteed by design.

5 Functional description

5.1 Boost controller

The STLD40D is a boost converter operating in PFM (pulsed frequency modulation) mode.

The converter monitors the LED current through the resistor R_{LED} and when the feedback voltage falls below the reference voltage REF2, the boost switch T_{SW} turns ON and the current ramps up. The inductor current is measured by sensing the temperature compensated drain voltage of the boost MOSFET. The boost turns off when its drain voltage reaches the internally reference REF1, the main switch remains off until the minimum off time (250 ns typical) has passed and the feedback voltage is below the reference again. A maximum ON time of 4 µs typical prevents the switch T_{SW} to stay ON during a too long period of time.

5.2 Adjustable peak inductor current limit

The peak inductor current is monitored by sensing the drain voltage of the switch T_{SW}. Since it exceeds the temperature compensated and supply voltage compensated reference REF1, the RS flip flop is reset and T_{SW} is turned OFF. By connecting a resistance to the pin R_{SET} the peak current limit can be adjusted from 200 mA to 1 A. When R_{SET} resistor value is about 12 kΩ is connected directly to GND, the default value is 1 A.

5.3 Enable

The ENABLE pin is a high logic input signal and allows turning on/off the controller without cutting the input voltage from the boost regulator circuit. The pin ENABLE can be used to dim the LED by applying a low frequency PWM signal.

5.4 OVP

If the regulation loop is cut, there is no signal at the feedback pin, the PFM controller will then continue to switch without control and generate an output voltage at the SW, and V_O pin exceeding the breakdown value V_{BSW}, and V_{BO}.

The over voltage protection (OVP) senses the voltage at the V_O pin. When the voltage exceed 38 V min. the controller is automatically turned OFF.

A hysteresis control allows the device restarting automatically since the output voltage drops down of 1.5 V.

6 Typical application

Figure 3. Application circuit

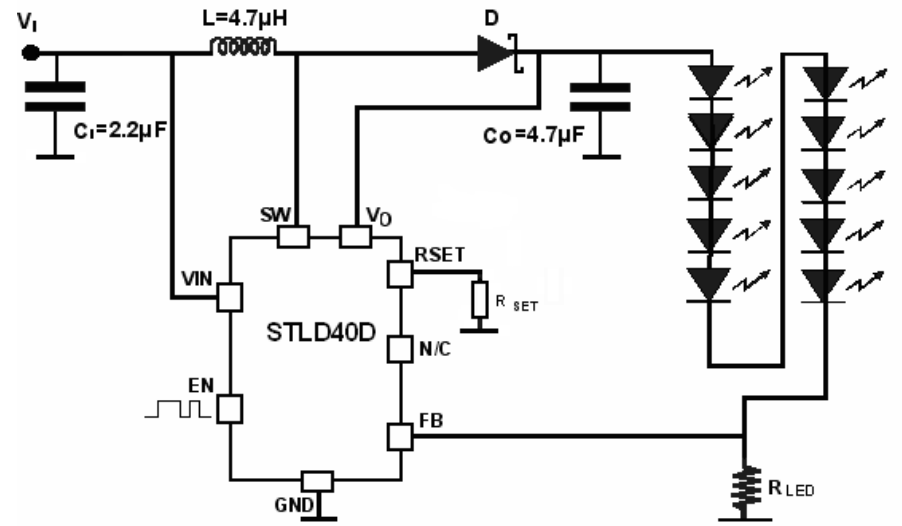

Table 6. External component proposal (see *Figure 3*)

Symbol	Parameter	Test conditions	Min.	Typ.	Max.	Unit
D	Boost schottky diode	VRRM	40			V
		V_F at I_F = 300 mA, T_J = 25 °C			0.5	V
		I_R at V_R = 10 V, T_J = 25 °C			30	µA
	STPS1L40M	VRRM	40			V
		V_F at I_F = 1 A, T_J = 25 °C			0.46	V
		I_R at V_R = 20 V, T_J = 25 °C			21	µA
R_{LED}	Feedback LED current regulation resistor	I_{LED} = 20 mA		8		Ω
R_{SET}	Current peak setting resistor	I_{PEAK} = 0.2 A to 1 A	12		100	kΩ
C_I	Input filtering capacitor	Ceramic Type		2.2		µF
C_O	Output capacitance: ceramic low ESR	Capacitance	4.7			µF
		Voltage	35			V
		ESR			1.6	Ω
L	Boost inductor (height < 2 mm)	Inductance			4.7	µH
		DCR			1	Ω
		$I_{SATRSET}$ = GND			1	A

Note: The external components proposal should be considered as a design reference guide.The performances mentioned in the electrical characteristics table are not guaranteed for all the possible electrical parameters of the components included in this list. On an other hand the operation of STLD40D is not limited with the use of components included in this list.

7 Typical performance characteristics

V_I = 3.6 V, V_{EN} = 3 V, C_I = 2.2 µF, C_O = 4.7 µF, L = 4.7 µH, R_{LED} = 8 Ω V_O = 32 V, 10 W LEDs load (V_O = 32 V) typ. values @ 25 °C, unless otherwise specified.

Figure 4. I_{LED} vs. R_{LED}

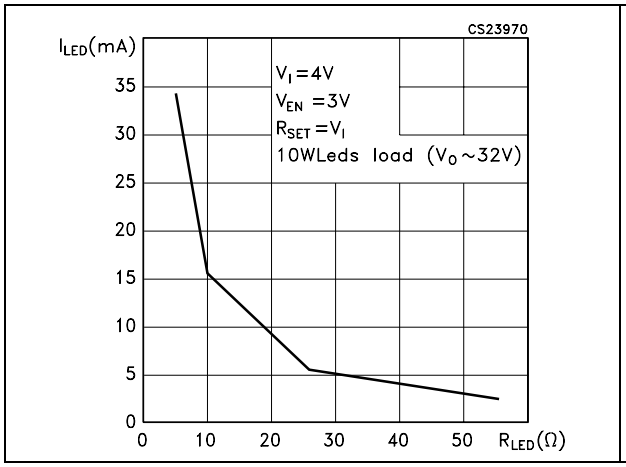

Figure 5. I_{LED} vs. V_I

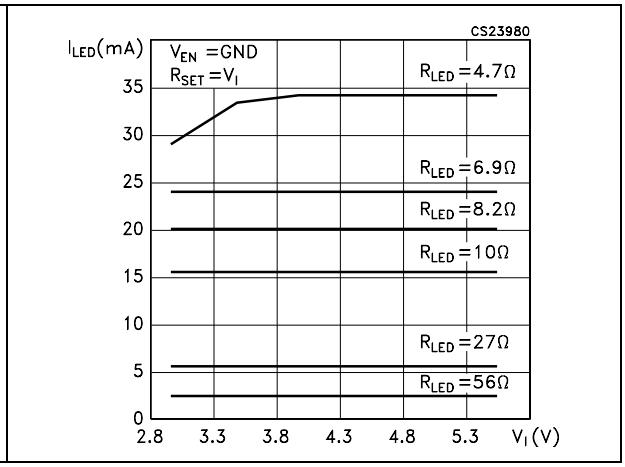

Figure 6. I_Q vs. temperature

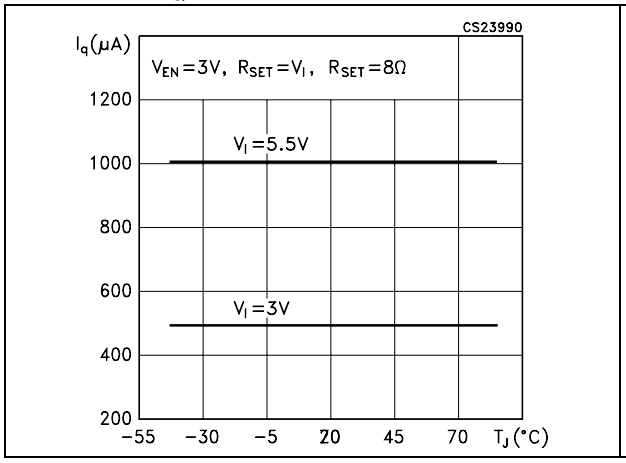

Figure 7. I_{SD} vs. V_I

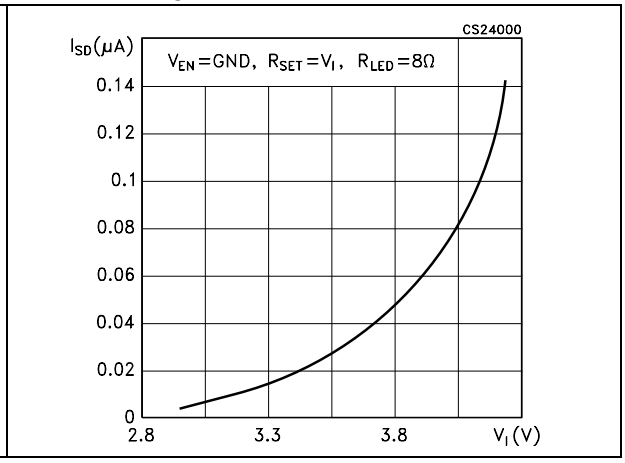

Figure 8. R_{DSON} vs.V_I

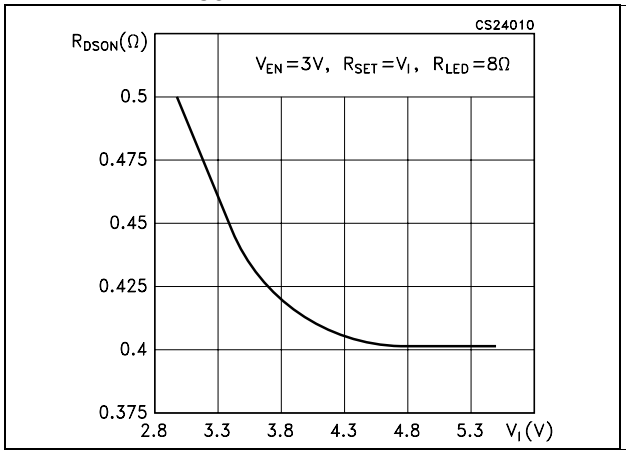

Figure 9. I_{LIMIT} vs. R_{SET}

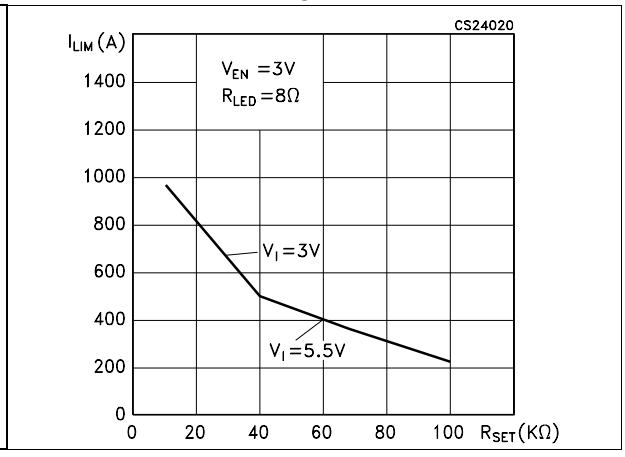

Figure 10. V_{FB} vs. temperature

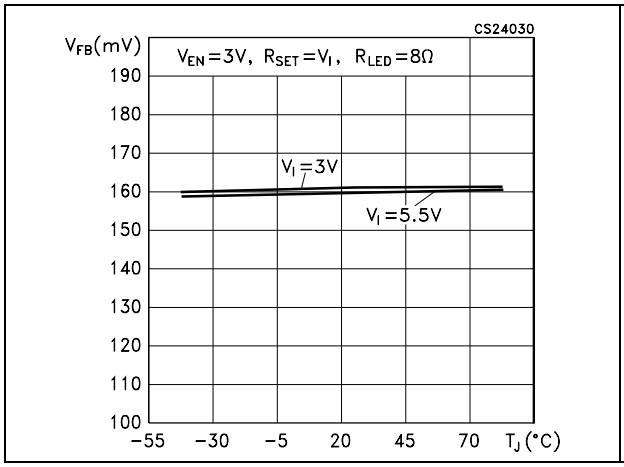

Figure 11. V_{EN} vs. temperature

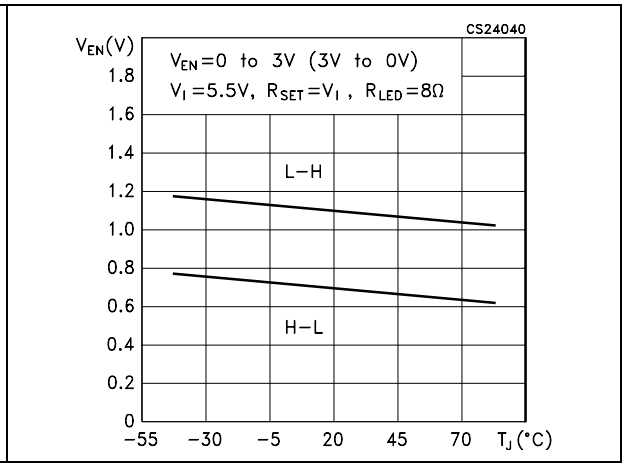

Figure 12. Efficiency vs. V_I

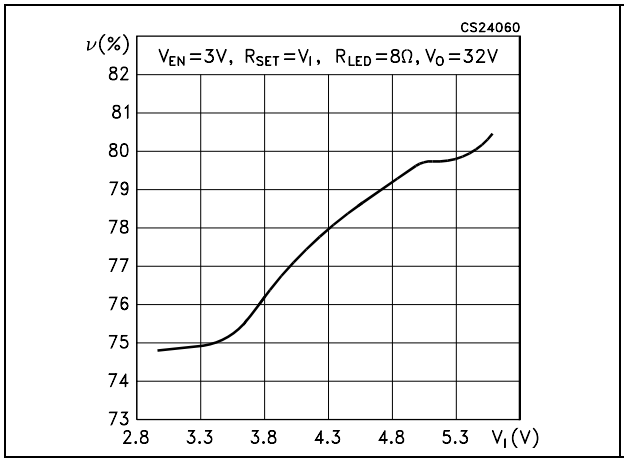

Figure 13. V_{OVP} vs. temperature

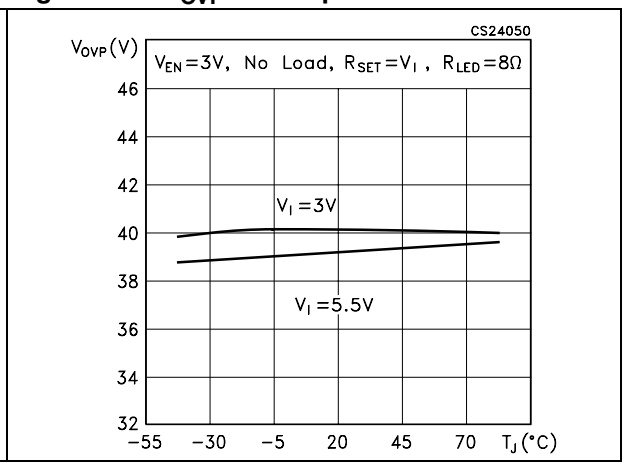

Figure 14. I_{LED} vs. duty cycle EN pin (dimming)

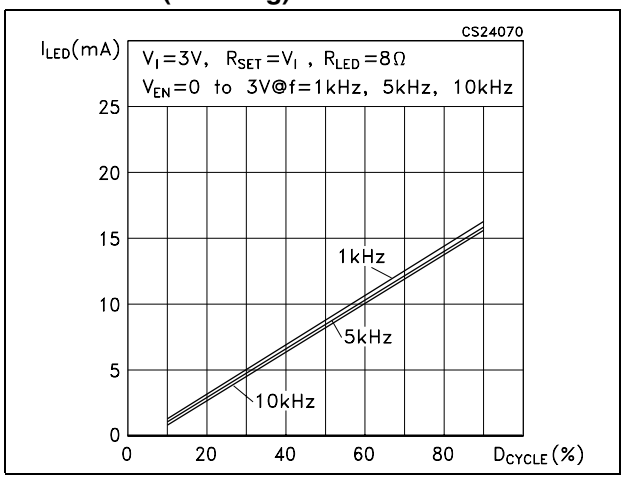

8 Package mechanical data

In order to meet environmental requirements, ST offers these devices in different grades of ECOPACK® packages, depending on their level of environmental compliance. ECOPACK® specifications, grade definitions and product status are available at: *www.st.com*. ECOPACK® is an ST trademark.

Table 7. QFN8 (3 x 3 mm) mechanical data

Dim.	mm.		
	Min.	Typ.	Max.
A	0.80	0.90	1.00
A1	0	0.02	0.05
A3		0.20	
b	0.25	0.30	0.35
D	2.85	3.00	3.15
D2	2.49	2.64	2.74
E	2.85	3.00	3.15
E2	1.75	1.90	2.00
e		0.65	
L	0.30	0.40	0.50

Figure 15. Drawing dimension QFN8 (3 x 3 mm)

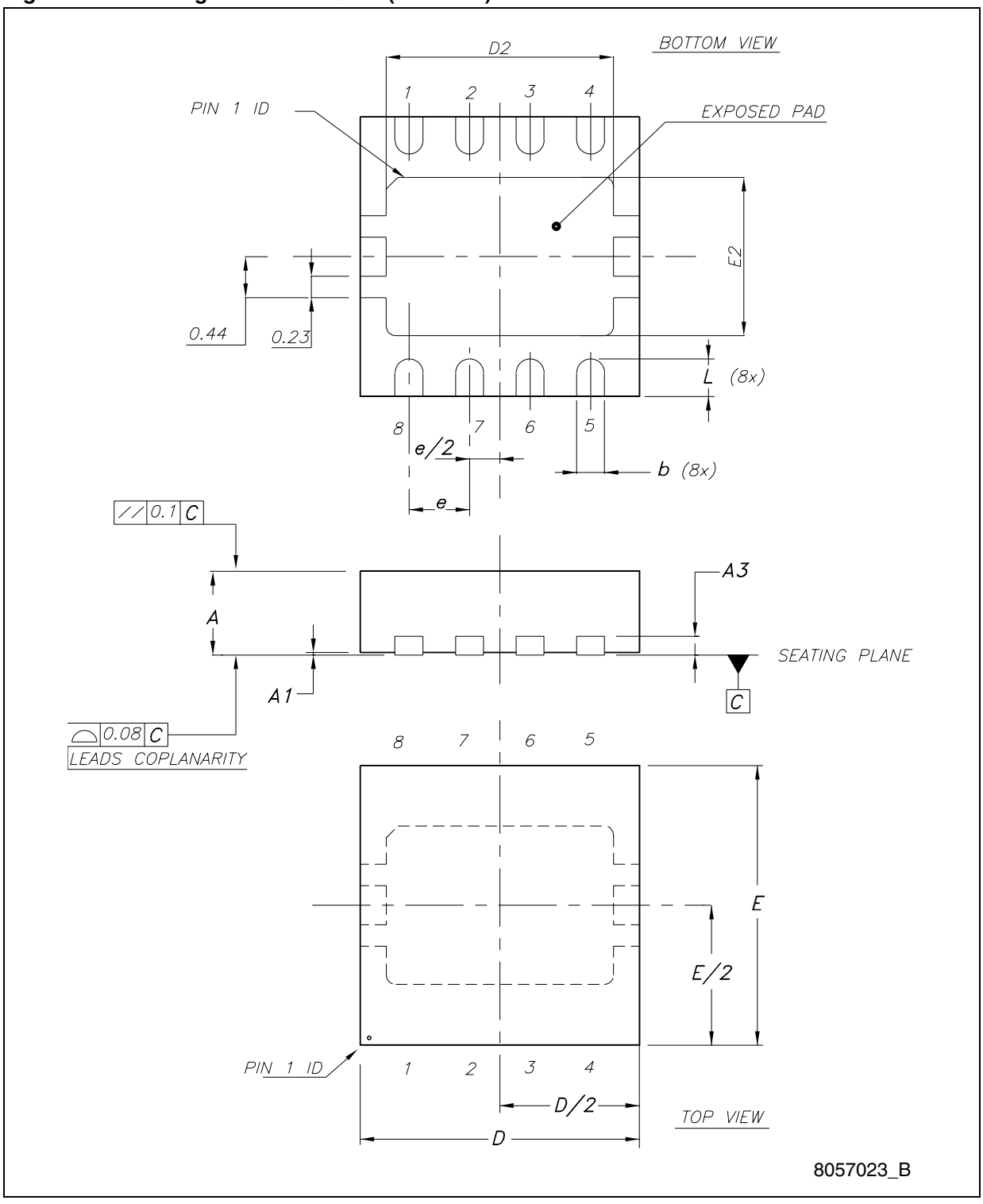

Tape & reel QFNxx/DFNxx (3x3) mechanical data

Dim.	mm.			inch.		
	Min.	Typ.	Max.	Min.	Typ.	Max.
A			180			7.087
C	12.8		13.2	0.504		0.519
D	20.2			0.795		
N	60			2.362		
T			14.4			0.567
Ao		3.3			0.130	
Bo		3.3			0.130	
Ko		1.1			0.043	
Po		4			0.157	
P		8			0.315	

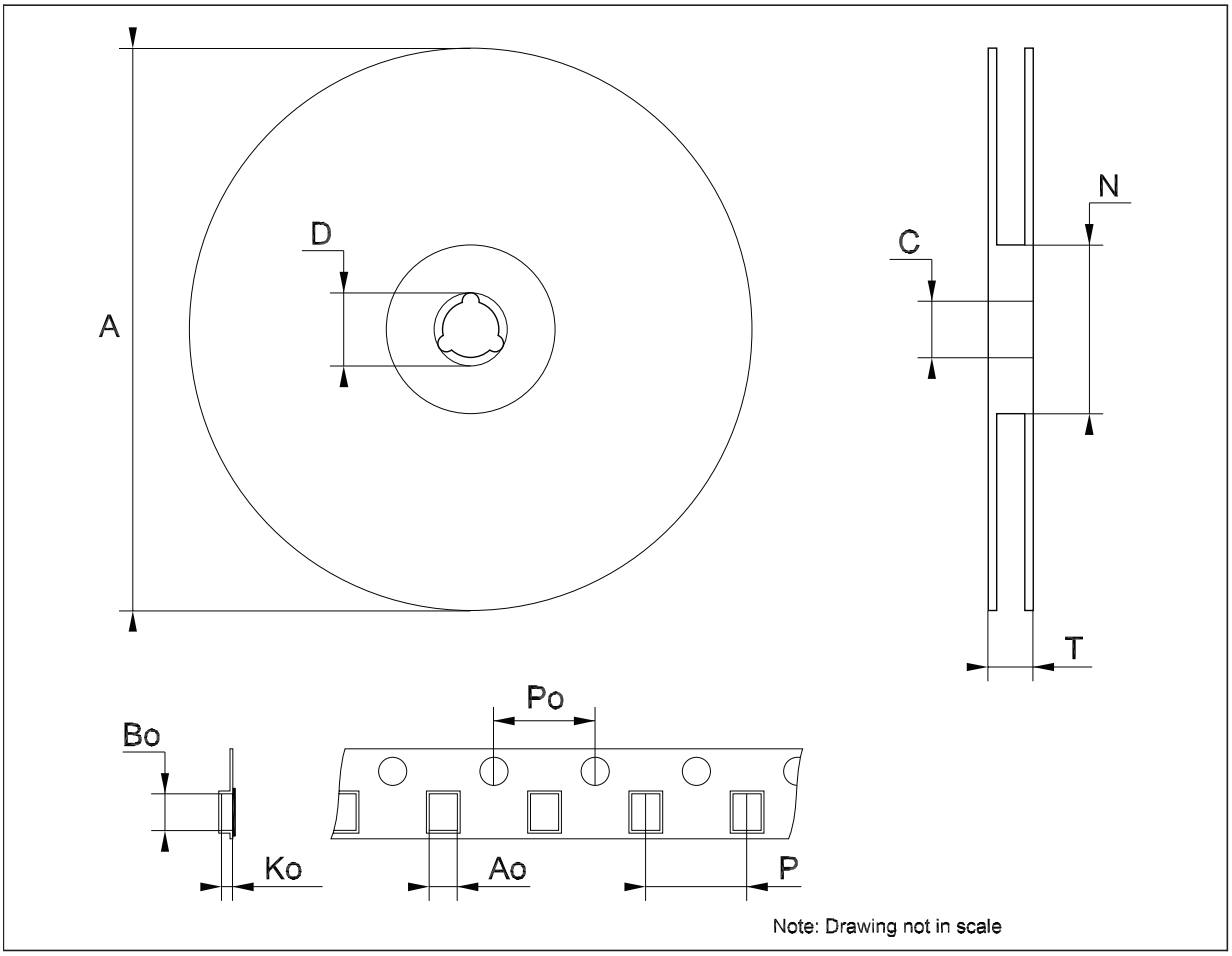

Figure 16. QFN8 (3x3) footprint recommended data

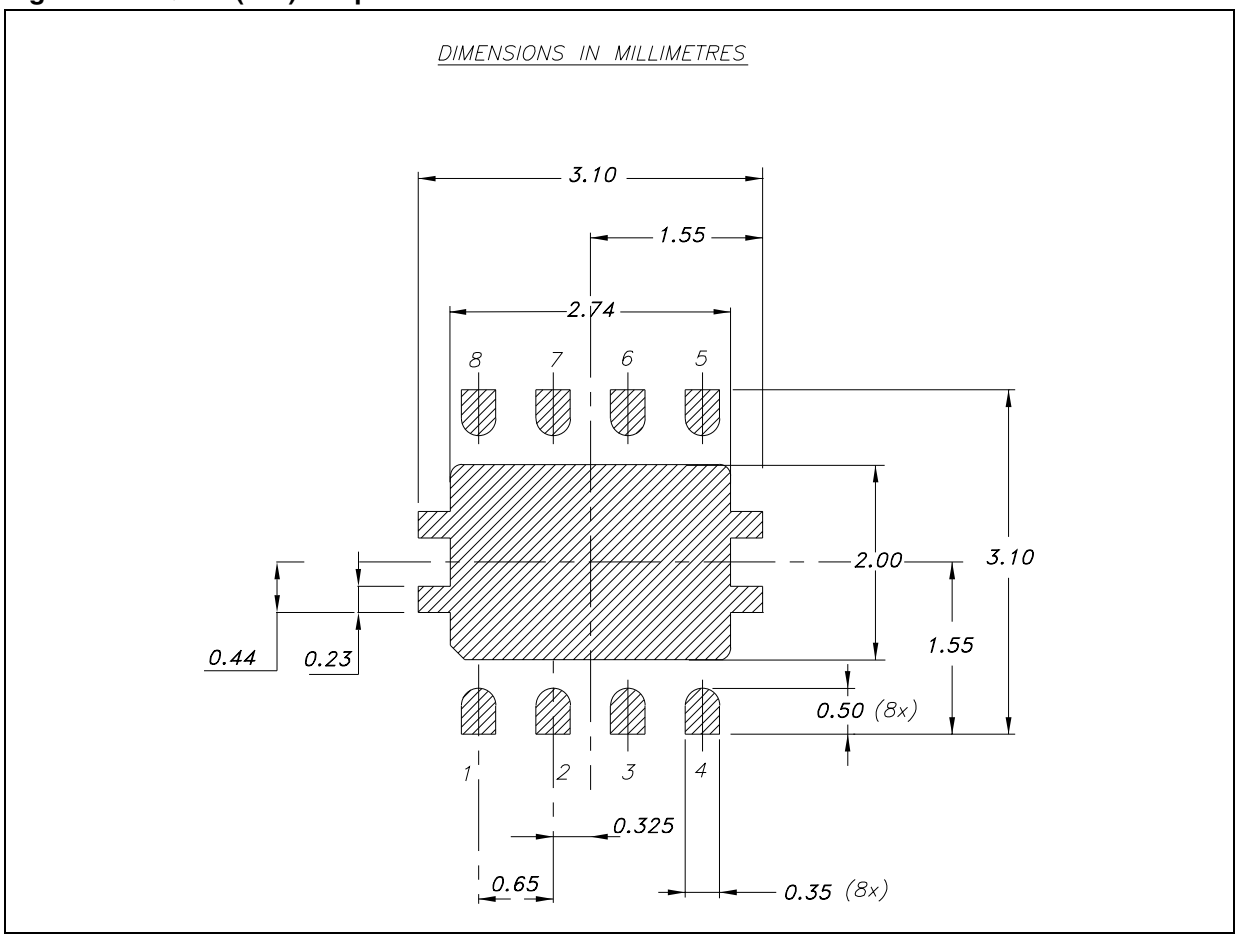

9 Revision history

Table 8. Document revision history

Date	Revision	Changes
20-Mar-2006	1	Initial release.
04-Apr-2006	2	Add R_{SET} in table 4 and fig 2 has been updated.
27-Feb-2009	3	Modified mechanical data.
03-Mar-2009	4	Modified packaging *Table 1 on page 1*.
11-Mar-2009	5	Modified: *Figure 2 on page 4* and added *Figure 16 on page 14*.
01-Jul-2010	6	Modified: *Table 7 on page 11*, *Figure 15 on page 12* and *Figure 16 on page 14*.
31-May-2011	7	Modified: *Table 6 on page 8*.

Please Read Carefully:

Information in this document is provided solely in connection with ST products. STMicroelectronics NV and its subsidiaries (“ST”) reserve the right to make changes, corrections, modifications or improvements, to this document, and the products and services described herein at any time, without notice.

All ST products are sold pursuant to ST’s terms and conditions of sale.

Purchasers are solely responsible for the choice, selection and use of the ST products and services described herein, and ST assumes no liability whatsoever relating to the choice, selection or use of the ST products and services described herein.

No license, express or implied, by estoppel or otherwise, to any intellectual property rights is granted under this document. If any part of this document refers to any third party products or services it shall not be deemed a license grant by ST for the use of such third party products or services, or any intellectual property contained therein or considered as a warranty covering the use in any manner whatsoever of such third party products or services or any intellectual property contained therein.

UNLESS OTHERWISE SET FORTH IN ST’S TERMS AND CONDITIONS OF SALE ST DISCLAIMS ANY EXPRESS OR IMPLIED WARRANTY WITH RESPECT TO THE USE AND/OR SALE OF ST PRODUCTS INCLUDING WITHOUT LIMITATION IMPLIED WARRANTIES OF MERCHANTABILITY, FITNESS FOR A PARTICULAR PURPOSE (AND THEIR EQUIVALENTS UNDER THE LAWS OF ANY JURISDICTION), OR INFRINGEMENT OF ANY PATENT, COPYRIGHT OR OTHER INTELLECTUAL PROPERTY RIGHT.

UNLESS EXPRESSLY APPROVED IN WRITING BY AN AUTHORIZED ST REPRESENTATIVE, ST PRODUCTS ARE NOT RECOMMENDED, AUTHORIZED OR WARRANTED FOR USE IN MILITARY, AIR CRAFT, SPACE, LIFE SAVING, OR LIFE SUSTAINING APPLICATIONS, NOR IN PRODUCTS OR SYSTEMS WHERE FAILURE OR MALFUNCTION MAY RESULT IN PERSONAL INJURY, DEATH, OR SEVERE PROPERTY OR ENVIRONMENTAL DAMAGE. ST PRODUCTS WHICH ARE NOT SPECIFIED AS "AUTOMOTIVE GRADE" MAY ONLY BE USED IN AUTOMOTIVE APPLICATIONS AT USER’S OWN RISK.

Resale of ST products with provisions different from the statements and/or technical features set forth in this document shall immediately void any warranty granted by ST for the ST product or service described herein and shall not create or extend in any manner whatsoever, any liability of ST.

ST and the ST logo are trademarks or registered trademarks of ST in various countries.

Information in this document supersedes and replaces all information previously supplied.

The ST logo is a registered trademark of STMicroelectronics. All other names are the property of their respective owners.

© 2011 STMicroelectronics - All rights reserved

STMicroelectronics group of companies

Australia - Belgium - Brazil - Canada - China - Czech Republic - Finland - France - Germany - Hong Kong - India - Israel - Italy - Japan - Malaysia - Malta - Morocco - Philippines - Singapore - Spain - Sweden - Switzerland - United Kingdom - United States of America

www.st.com