# STS4DNFS30

## N-channel - 30V - 0.044Ω - 4.5A SO-8
## STripFET™ Power MOSFET plus schottky rectifier

## General features

| Type | $V_{DSS}$ | $R_{DS(on)}$ | $I_D$ |
|---|---|---|---|
| STS4DNFS30 | 30V | <0.055Ω | 4.5A |
| **Schottky** | $I_{F(AV)}$ | $V_{RRM}$ | $V_{F(MAX)}$ |
| | 4.5A | 30V | 0.53V |

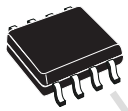

SO-8

## Description

This product associates the latest low voltage STripFET™ in n-channel version to a low drop Schottky diode. Such configuration is extremely versatile in implementing a large variety of DC-DC converters for printers, portable equipment.

## Applications

- Switching application

## Internal schematic diagram

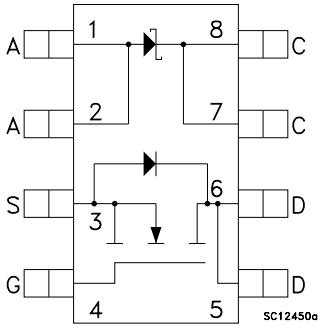


## Order codes

| Part number | Marking | Package | Packaging |
|---|---|---|---|
| STS4DNFS30 | S4DNFS30 | SO-8 | Tape & reel |

Obsolete Product(s) - Obsolete Product(s)
Obsolete Product(s) - Obsolete Product(s)

# Contents

1 Electrical ratings . . . . . 3

2 Electrical characteristics . . . . . 4

2.1 Electrical characteristics (curves) . . . . . 6

3 Test circuits . . . . . 8

4 Package mechanical data . . . . . 9

5 Revision history . . . . . 11

Obsolete Product(s) - Obsolete Product(s)
Obsolete Product(s) - Obsolete Product(s)

# 1 Electrical ratings

**Table 1. Mosfet absolute maximum ratings**

| Symbol | Parameter | Value | Unit |
|---|---|---|---|
| $V_{DS}$ | Drain-source voltage ($V_{GS}$ = 0) | 30 | V |
| $V_{GS}$ | Gate- source voltage | ± 20 | V |
| $I_D$ | Drain current (continuous) at $T_C$ = 25°C | 4.5 | A |
| $I_D$ | Drain current (continuous) at $T_C$ = 100°C | 3.2 | A |
| $I_{DM}$ (1) | Drain current (pulsed) | 13 | A |
| $P_{TOT}$ | Total dissipation at $T_C$ = 25°C | 2 | W |

1. Pulse width limited by safe operating area

**Table 2. Schottky absolute maximum ratings**

| Symbol | Parameter | | Value | Unit |
|---|---|---|---|---|
| $V_{RRM}$ | Repetitive peak reverse voltage | | 30 | V |
| $I_{F(RMS)}$ | RMS forward current | | 10 | A |
| $I_{F(AV)}$ | Average forward current | $T_L$=125°C δ=0.5 | 4 | A |
| $I_{FSM}$ | Surge non repetitive forward current | tp=10ms Sinusoidal | 75 | A |
| $I_{RRM}$ | Repetitive peak reverse current | tp=2µs F=1kHz | 1 | A |
| $I_{RSM}$ | Non repetitive peak reverse current | tp=100µs | 1 | A |
| dv/dt | Critical rate of rise of reverse voltage | | 10000 | v/µs |

**Table 3. Thermal data**

| Symbol | Parameter | Value | Unit |
|---|---|---|---|
| Rthj-amb | Thermal resistance junction-amb Mosfet (1) | 62.5 | °C/W |
| $T_{stg}$ | Storage temperature range Max | -55 to 150 | °C |
| $T_j$ | Junction temperature | -55 to 150 | °C |

1. Mounted on FR-4 board (steady state)

Obsolete Product(s) - Obsolete Product(s)

# 2 Electrical characteristics

(Tcase =25°C unless otherwise specified)

**Table 4. On /off states**

| Symbol | Parameter | Test conditions | Min. | Typ. | Max. | Unit |
|---|---|---|---|---|---|---|
| $V_{(BR)DSS}$ | Drain-source breakdown voltage | $I_D$ = 250µA, $V_{GS}$ = 0 | 30 | | | V |
| $I_{DSS}$ | Zero gate voltage drain current ($V_{GS}$ = 0) | $V_{DS}$ = Max rating<br>$V_{DS}$ = Max rating, $T_C$=125°C | | | 1<br>10 | µA<br>µA |
| $I_{GSS}$ | Gate-body leakage current ($V_{DS}$ = 0) | $V_{GS}$ = ± 20V | | | ± 100 | nA |
| $V_{GS(th)}$ | Gate threshold voltage | $V_{DS}$ = $V_{GS}$, $I_D$ = 250µA | 1 | | | V |
| $R_{DS(on)}$ | Static drain-source on resistance | $V_{GS}$ = 10V, $I_D$ = 2A<br>$V_{GS}$ = 5V, $I_D$ = 2A | | 0.044 | 0.055<br>0.085 | Ω<br>Ω |

**Table 5. Static**

| Symbol | Parameter | Test conditions | | Min. | Typ. | Max. | Unit |
|---|---|---|---|---|---|---|---|
| $I_R$ (1) | Reverse leakage current | $T_j$ = 25°C<br>$T_j$ = 100°C | $V_R$ = $V_{RRM}$ | | <br>6 | 200<br>15 | µA<br>mA |
| $V_F$ (1) | Zero gate voltage drain current ($V_{GS}$ = 0) | $T_j$ = 25°C<br>$T_j$ = 125°C | $I_F$ = 2A | | <br>0.325 | 0.45<br>0.375 | V<br>V |
| | | $T_j$ = 25°C<br>$T_j$ = 125°C | $I_F$ = 4A | | <br>0.43 | 0.53<br>0.51 | V<br>V |

1. Pulse test: tp=380µs, δ < 2%. To evaluate the conduction losses use the following equation:

$$P = 0.24 \times I_{F(AV)} + 0.068 I_{F^2}(RMS)$$

**Table 6. Dynamic**

| Symbol | Parameter | Test conditions | Min. | Typ. | Max. | Unit |
|---|---|---|---|---|---|---|
| $g_{fs}$ | Forward transconductance | $V_{DS}$ =10V, $I_D$ =2A | | 5 | | S |
| $C_{iss}$<br>$C_{oss}$<br>$C_{rss}$ | Input capacitance<br>Output capacitance<br>Reverse transfer capacitance | $V_{DS}$ = 25 V, f = 1 MHz, $V_{GS}$ = 0 | | 330<br>115<br>28 | | pF<br>pF<br>pF |
| $Q_g$<br>$Q_{gs}$<br>$Q_{gd}$ | Total gate charge<br>Gate-source charge<br>Gate-drain charge | $V_{DD}$ = 15V, $I_D$ = 4.5A,<br>$V_{GS}$ = 5V<br>(see *Figure 13*) | | 4.7<br>1.2<br>2.1 | | nC<br>nC<br>nC |

Obsolete Product(s) - Obsolete Product(s)

**Table 7. Switching times**

| Symbol | Parameter | Test Conditions | Min. | Typ. | Max | Unit |
|---|---|---|---|---|---|---|
| $t_{d(on)}$<br>$t_r$ | Turn-on delay time<br>Rise time | $V_{DD}$ = 15V, $I_D$ = 2A,<br>$R_G$ = 4.7Ω, $V_{GS}$ = 5V<br>(see *Figure 12*) | | 9<br>17 | | ns<br>ns |
| $t_{d(off)}$<br>$t_f$ | Turn-off delay time<br>Fall time | $V_{DD}$ = 15V, $I_D$ = 2A,<br>$R_G$ = 4.7Ω, $V_{GS}$ = 5V<br>(see *Figure 12*) | | 15<br>6 | | ns<br>ns |

**Table 8. Source drain diode**

| Symbol | Parameter | Test Conditions | Min. | Typ. | Max | Unit |
|---|---|---|---|---|---|---|
| $I_{SD}$<br>$I_{SDM}$ (1) | Source-drain current<br>Source-drain current (pulsed) | | | | 4.5<br>13 | A<br>A |
| $V_{SD}$ (2) | Forward on voltage | $I_{SD}$ = 4.5A, $V_{GS}$ = 0 | | | 1.2 | V |
| $t_{rr}$<br>$Q_{rr}$<br>$I_{RRM}$ | Reverse recovery time<br>Reverse recovery charge<br>Reverse recovery current | $I_{SD}$ = 4.5A, di/dt = 100A/µs<br>$V_{DD}$ = 15V, $T_j$ = 150 °C<br>(see *Figure 17*) | | 22<br>14.3<br>1.3 | | ns<br>nC<br>A |

1. Pulse width limited by safe operating area
2. Pulsed: Pulse duration = 300 µs, duty cycle 1.5 %

Obsolete Product(s) - Obsolete Product(s)
Obsolete Product(s) - Obsolete Product(s)

## 2.1 Electrical characteristics (curves)

**Figure 1. Safe operating area**

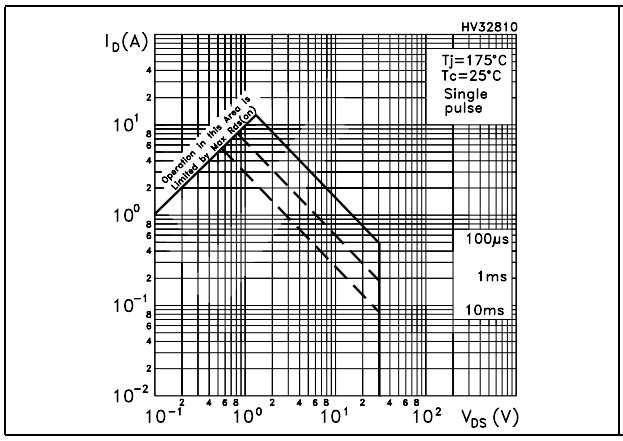


**Figure 2. Thermal impedance**

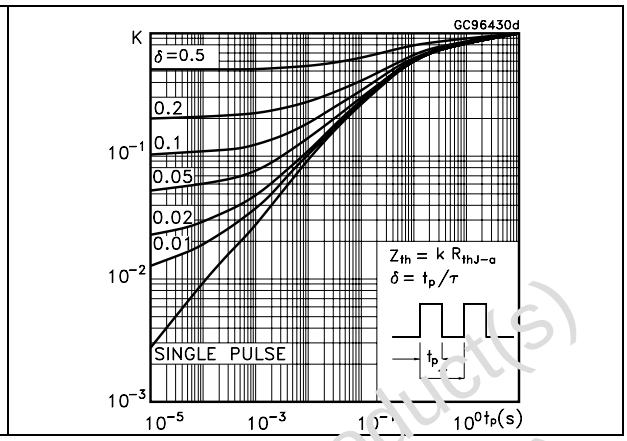


**Figure 3. Output characterisics**

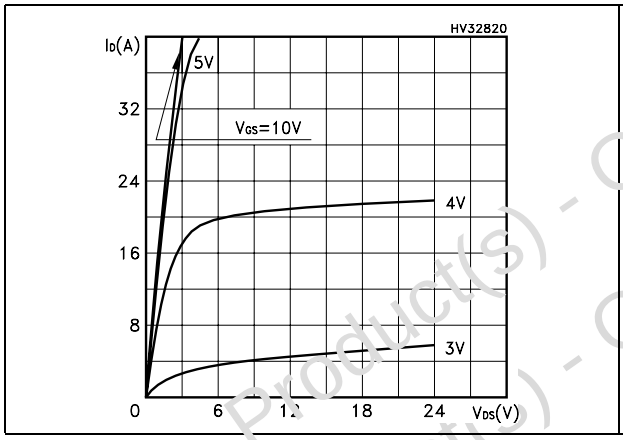


**Figure 4. Transfer characteristics**

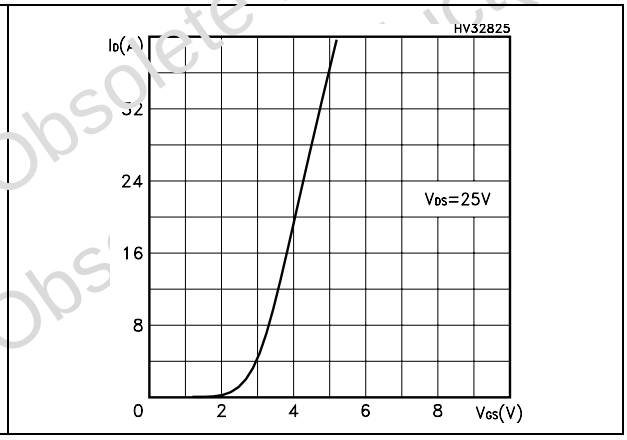


**Figure 5. Source-drain diode forward characteristics**

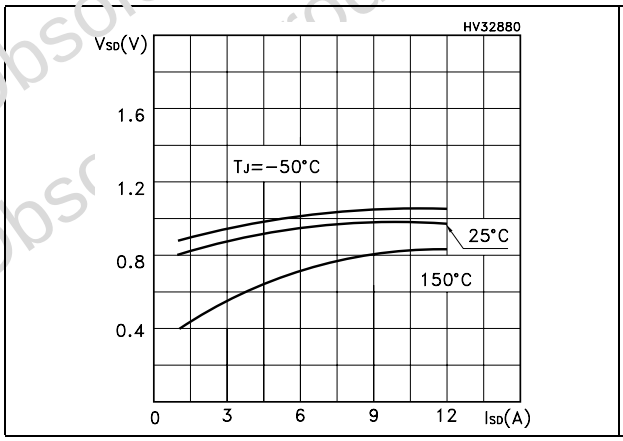


**Figure 6. Static drain-source on resistance**

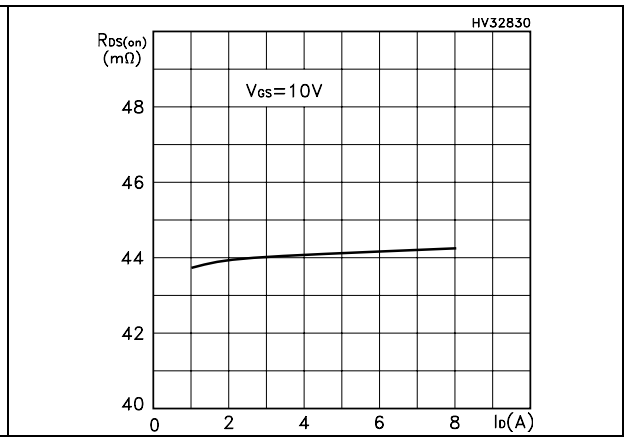


Obsolete Product(s) - Obsolete Product(s)

**Figure 7. Gate charge vs gate-source voltage**

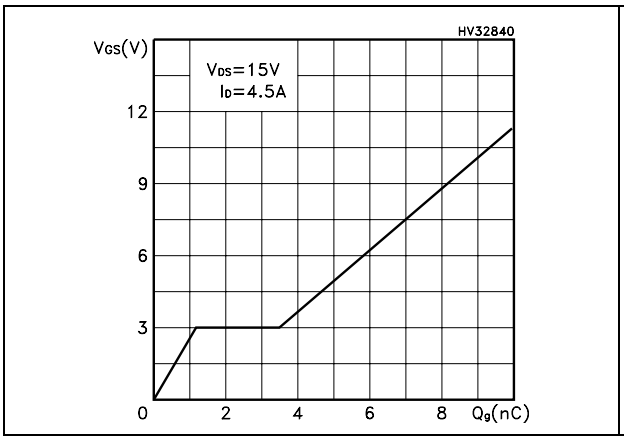


**Figure 8. Capacitance variations**

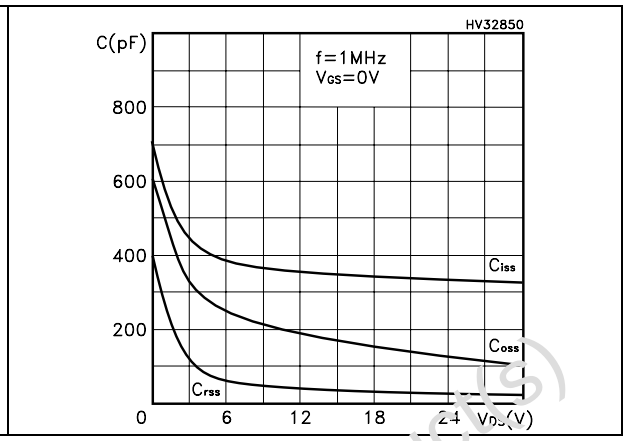


**Figure 9. Normalized gate threshold voltage vs temperature**

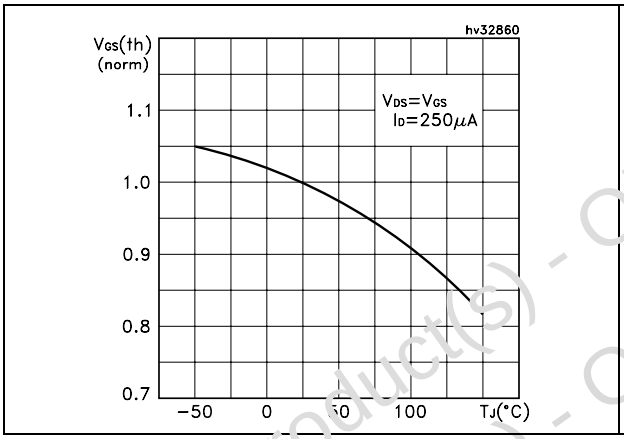


**Figure 10. Normalized on resistance vs temperature**

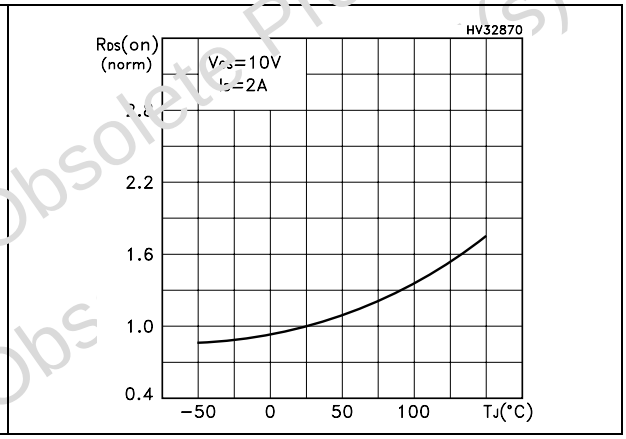


**Figure 11. Normalized $BV_{DSS}$ voltage vs temperature**

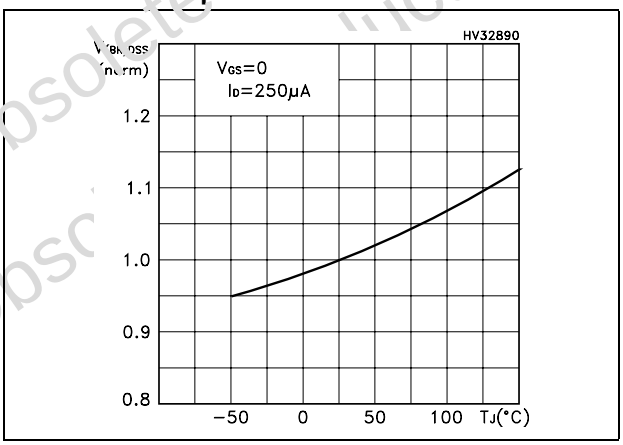


Obsolete Product(s) - Obsolete Product(s)

# 3 Test circuits

**Figure 12. Switching times test circuit for resistive load**

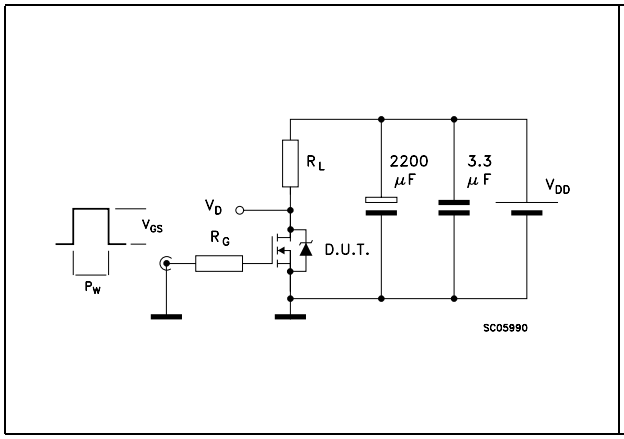


**Figure 13. Gate charge test circuit**

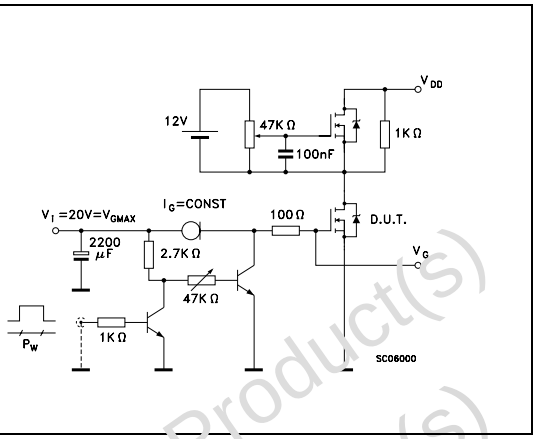


**Figure 14. Test circuit for inductive load switching and diode recovery times**

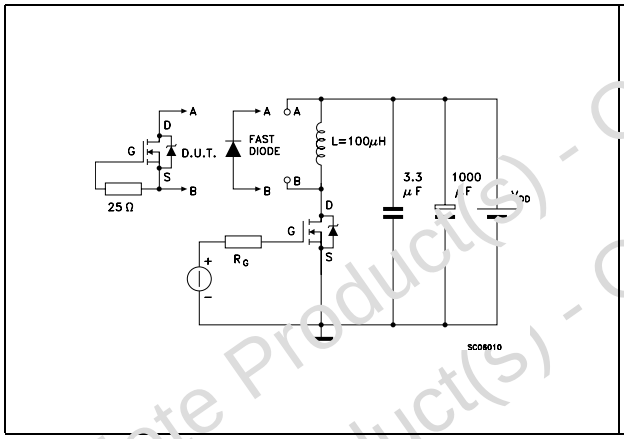


**Figure 15. Unclamped inductive load test circuit**

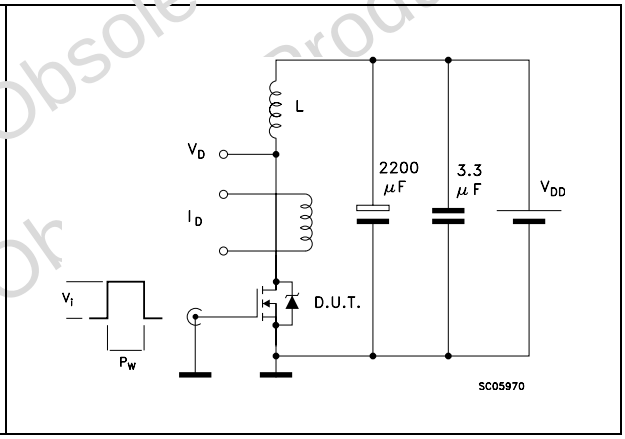


**Figure 16. Unclamped inductive waveform**

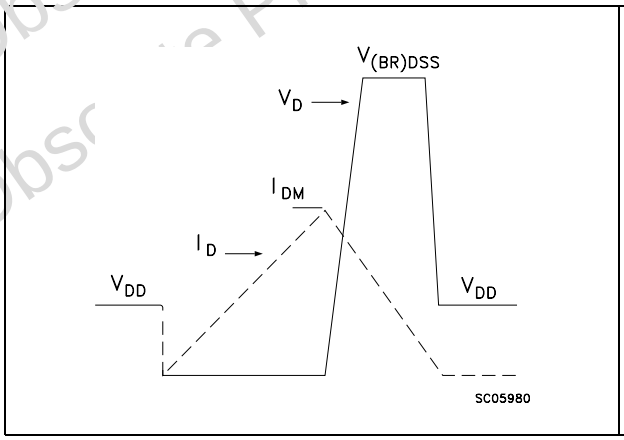


**Figure 17. Switching time waveform**

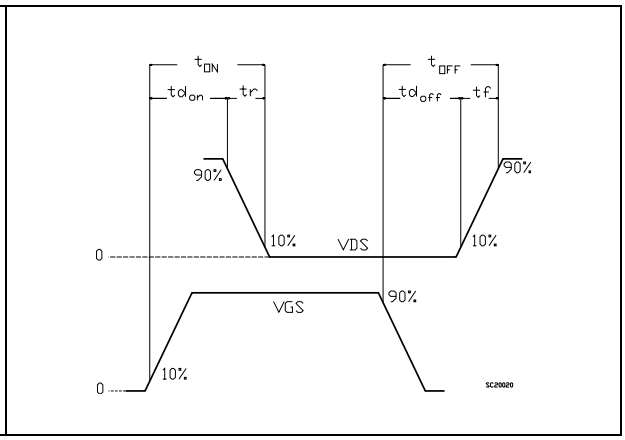


Obsolete Product(s) - Obsolete Product(s) - Or

# 4 Package mechanical data

In order to meet environmental requirements, ST offers these devices in ECOPACK® packages. These packages have a Lead-free second level interconnect . The category of second level interconnect is marked on the package and on the inner box label, in compliance with JEDEC Standard JESD97. The maximum ratings related to soldering conditions are also marked on the inner box label. ECOPACK is an ST trademark. ECOPACK specifications are available at: *www.st.com*

Obsolete Product(s) - Obsolete Product(s)
Obsolete Product(s) - Obsolete Product(s)

## SO-8 MECHANICAL DATA

| DIM. | mm. | | | inch | | |
|---|---|---|---|---|---|---|
| | MIN. | TYP | MAX. | MIN. | TYP. | MAX. |
| A | | | 1.75 | | | 0.068 |
| a1 | 0.1 | | 0.25 | 0.003 | | 0.009 |
| a2 | | | 1.65 | | | 0.064 |
| a3 | 0.65 | | 0.85 | 0.025 | | 0.033 |
| b | 0.35 | | 0.48 | 0.013 | | 0.018 |
| b1 | 0.19 | | 0.25 | 0.007 | | 0.010 |
| C | 0.25 | | 0.5 | 0.010 | | 0.019 |
| c1 | 45 (typ.) | | | | | |
| D | 4.8 | | 5.0 | 0.188 | | 0.196 |
| E | 5.8 | | 6.2 | 0.228 | | 0.244 |
| e | | 1.27 | | | 0.050 | |
| e3 | | 3.81 | | | 0.150 | |
| F | 3.8 | | 4.0 | 0.14 | | 0.157 |
| L | 0.4 | | 1.27 | 0.015 | | 0.050 |
| M | | | 0.6 | | | 0.023 |
| S | 8 (max.) | | | | | |

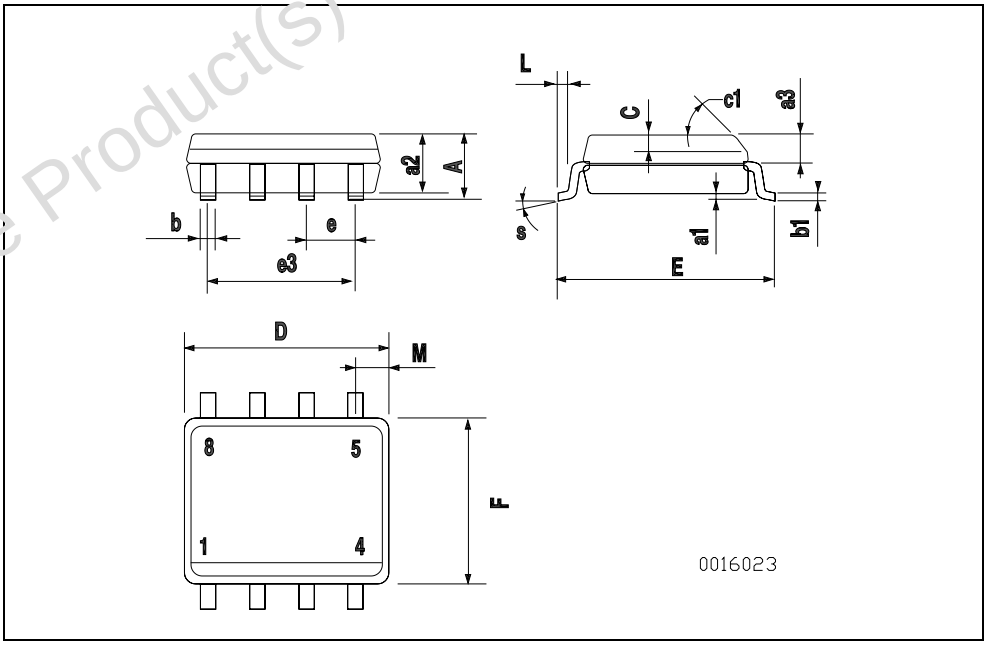


Obsolete Product(s) - Obsolete Product(s)

# 5 Revision history

Table 9. Revision history

| Date | Revision | Changes |
|---|---|---|
| 19-Jul-2005 | 1 | First release |

Obsolete Product(s) - Obsolete Product(s)
Obsolete Product(s) - Obsolete Product(s)

**Please Read Carefully:**

Information in this document is provided solely in connection with ST products. STMicroelectronics NV and its subsidiaries ("ST") reserve the right to make changes, corrections, modifications or improvements, to this document, and the products and services described herein at any time, without notice.

All ST products are sold pursuant to ST's terms and conditions of sale.

Purchasers are solely responsible for the choice, selection and use of the ST products and services described herein, and ST assumes no liability whatsoever relating to the choice, selection or use of the ST products and services described herein.

No license, express or implied, by estoppel or otherwise, to any intellectual property rights is granted under this document. If any part of this document refers to any third party products or services it shall not be deemed a license grant by ST for the use of such third party products or services, or any intellectual property contained therein or considered as a warranty covering the use in any manner whatsoever of such third party products or services or any intellectual property contained therein.

**UNLESS OTHERWISE SET FORTH IN ST'S TERMS AND CONDITIONS OF SALE ST DISCLAIMS ANY EXPRESS OR IMPLIED WARRANTY WITH RESPECT TO THE USE AND/OR SALE OF ST PRODUCTS INCLUDING WITHOUT LIMITATION IMPLIED WARRANTIES OF MERCHANTABILITY, FITNESS FOR A PARTICULAR PURPOSE (AND THEIR EQUIVALENTS UNDER THE LAWS OF ANY JURISDICTION), OR INFRINGEMENT OF ANY PATENT, COPYRIGHT OR OTHER INTELLECTUAL PROPERTY RIGHT.**

**UNLESS EXPRESSLY APPROVED IN WRITING BY AN AUTHORIZED ST REPRESENTATIVE, ST PRODUCTS ARE NOT RECOMMENDED, AUTHORIZED OR WARRANTED FOR USE IN MILITARY, AIR CRAFT, SPACE, LIFE SAVING, OR LIFE SUSTAINING APPLICATIONS, NOR IN PRODUCTS OR SYSTEMS WHERE FAILURE OR MALFUNCTION MAY RESULT IN PERSONAL INJURY, DEATH, OR SEVERE PROPERTY OR ENVIRONMENTAL DAMAGE. ST PRODUCTS WHICH ARE NOT SPECIFIED AS "AUTOMOTIVE GRADE" MAY ONLY BE USED IN AUTOMOTIVE APPLICATIONS AT USER'S OWN RISK.**

Resale of ST products with provisions different from the statements and/or technical features set forth in this document shall immediately void any warranty granted by ST for the ST product or service described herein and shall not create or extend in any manner whatsoever, any liability of ST.

ST and the ST logo are trademarks or registered trademarks of ST in various countries.

Information in this document supersedes and replaces all information previously supplied.

The ST logo is a registered trademark of STMicroelectronics. All other names are the property of their respective owners.

© 2006 STMicroelectronics - All rights reserved

STMicroelectronics group of companies

Australia - Belgium - Brazil - Canada - China - Czech Republic - Finland - France - Germany - Hong Kong - India - Israel - Italy - Japan - Malaysia - Malta - Morocco - Singapore - Spain - Sweden - Switzerland - United Kingdom - United States of America

**www.st.com**

Obsolete Product(s) - Obsolete Product(s)