# ESDLIN1524BJ

Datasheet

## Automotive LIN bus ESD protection in SOD323




SOD323 (SC-76)

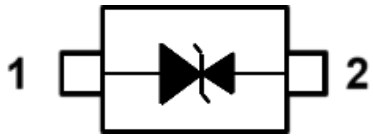


| Product status link |
| --- |
| ESDLIN1524BJ |

## Features

- AEC-Q101 qualified
- Asymetrical bidirectional ESD protection
- Low leakage current ($I_R$ max. < 50 nA at $V_{RM}$)
- Stand-off voltage:
  - -15 V (to comply with reverse battery)
  - +24 V (to comply with jump start)
- High ESD protection level: up to 30 kV
- ECOPACK2 RoHS compliant component

**Complies with the following standards**

- UL94, V0
- J-STD-020 MSL level 1
- IPC7531 footprint and JEDEC registered package
- ISO 16750-2 (jump start and reversed battery tests)
- ISO 10605 / IEC 61000-4-2- C = 150 pF, R = 330 Ω, exceeds level 4:
  - ±30 kV (air discharge)
  - ±30 kV (contact discharge)
- ISO 10605 - C = 330 pF, R = 330 Ω:
  - ± 30 kV (air discharge)
  - ± 30 kV (contact discharge)
- ISO 7637-3:
  - Pulse 3a: -150 V
  - Pulse 3b: +150 V
  - Pulse 2a: +/- 85 V
- ISO 17987-7 (LIN bus)
- SAE J3076 (CXPI bus)

## Description

The ESDLIN1524BJ is an asymmetrical TVS diode designed to protect one local interconnect network (LIN) bus and clock extension peripheral interface (CXPI) against electrostatic discharge (ESD) and other transient surges such as those defined in ISO 7637-3.

The SOD323 is a small package that saves space on high density printed circuit board.

# 1 Characteristics

**Table 1. Absolute maximum ratings ($T_{amb}$ = 25 °C)**

| Symbol | Parameter | | Value | Unit |
|---|---|---|---|---|
| $V_{PP}$ | Peak pulse voltage | IEC 61000-4-2 / ISO 10605 - C = 150 pF, R = 330 Ω: | | kV |
| | | Contact discharge | ±30 | |
| | | Air discharge | ±30 | |
| | | ISO 10605 - C = 330 pF, R = 330 Ω: | | |
| | | Contact discharge | ±30 | |
| | | Air discharge | ±30 | |
| $P_{PP}$ | Peak pulse power dissipation (8/20 µs) | | 160 | W |
| $T_{stg}$ | Storage temperature range | | -65 to +175 | °C |
| $T_j$ | Operating junction temperature range | | -40 to +150 | °C |
| $T_L$ | Maximum lead temperature for soldering during 10 s | | 260 | °C |

**Figure 1. Electrical characteristics (definitions)**

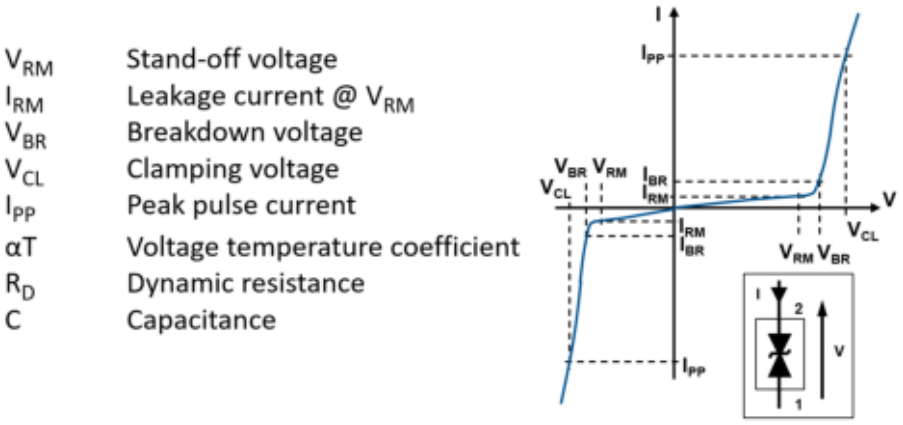

**Table 2. Electrical characteristics ($T_{amb}$ = 25° C, unless otherwise specified)**

| Symbol | Configuration | Test condition | | Min. | Typ. | Max. | Unit |
|---|---|---|---|---|---|---|---|
| $V_{RM}$ | From pin 2 to pin 1 | | | | | 24 | V |
| | From pin 1 to pin 2 | | | | | 15 | |
| $V_{BR}$ | From pin 2 to pin 1 | $I_R$ = 5 mA, $t_p$ < 50 ms | | 25.4 | 27.8 | 30.3 | V |
| | From pin 1 to pin 2 | | | 17.2 | 18.9 | 20.3 | |
| $I_{RM}$ | From pin 2 to pin 1 | $V_{RM}$ = 24 V | | | 1 | 50 | nA |
| | From pin 1 to pin 2 | $V_{RM}$ = 15 V | | | | | |
| $V_{CL}$ (1) | From pin 2 to pin 1 | $I_{PP}$ = 1 A | 8/20 µs | | | 40 | V |
| | From pin 2 to pin 1 | $I_{PP}$ = 3 A | | | | 50 | |
| | From pin 1 to pin 2 | $I_{PP}$ = 1 A | | | | 25 | |
| | From pin 1 to pin 2 | $I_{PP}$ = 5 A | | | | 35 | |
| C (1) | | $V_R$ = 0 V, f = 1 MHz | | | 16 | 20 | pF |
| αT (2)(3)(1) | From pin 2 to pin 1 | | | | | 9.6 | $10^{-4}$/°C |
| | From pin 1 to pin 2 | | | | | 8.8 | |

1. *Specified by design – Not tested in production.*
2. *Connections done according to Figure 2.*
3. *To calculate $V_{BR}$ or $V_{CL}$ versus junction temperature, use the following formulas:*
   - *$V_{BR}$ at $T_J$ = $V_{BR}$ at 25 °C x (1 + αT x ($T_J$ - 25))*
   - *$V_{CL}$ at $T_J$ = $V_{CL}$ at 25 °C x (1 + αT x ($T_J$ - 25)).*

**Figure 2. Clamping test conditions**

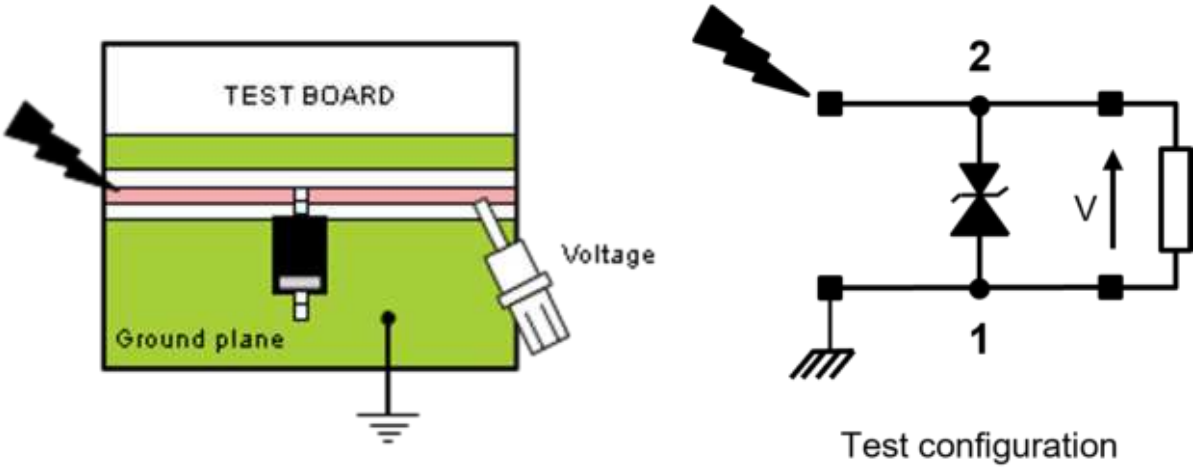

## 1.1 Characteristics (curves)

**Figure 3. Relative variation of peak pulse power versus initial junction temperature**

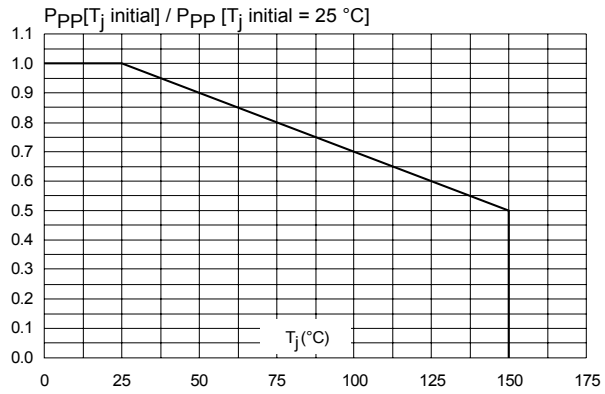


**Figure 4. Peak pulse power versus exponential pulse duration**

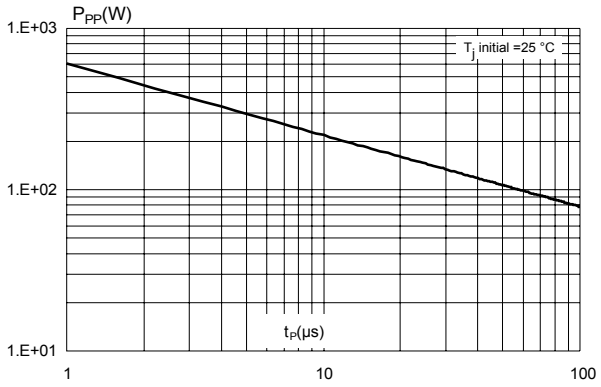


**Figure 5. Junction capacitance versus line voltage, 15 V side**

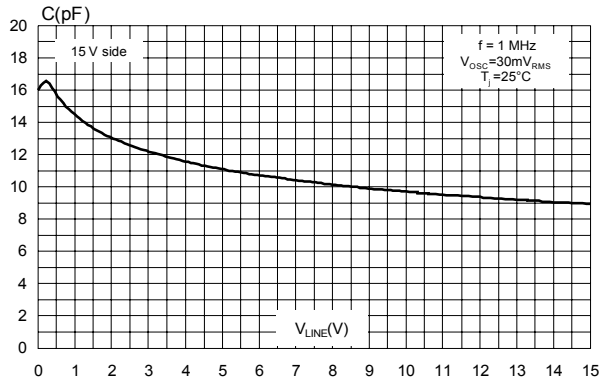


**Figure 6. Junction capacitance versus line voltage, 24 V side**

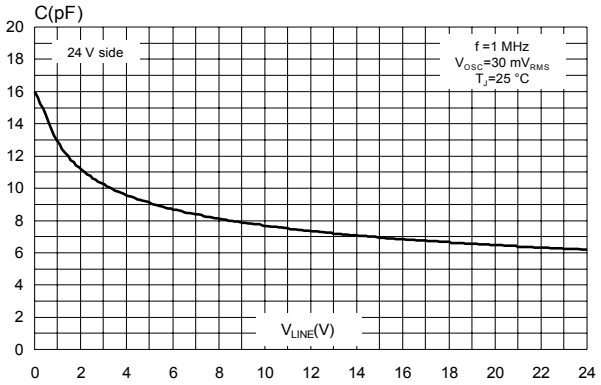


**Figure 7. ESD response to ISO 10605 - C = 150 pF, R = 330 Ω (-8 kV contact discharge)**

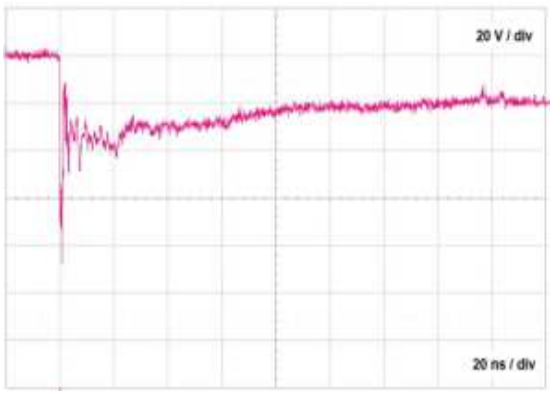


**Figure 8. ESD response to ISO 10605 - C = 150 pF, R = 330 Ω (+8 kV contact discharge)**

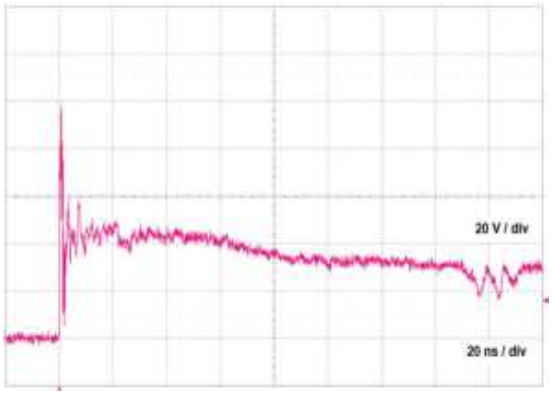

Figure 9. Response to ISO 7637-3 pulse 2a: -85 V

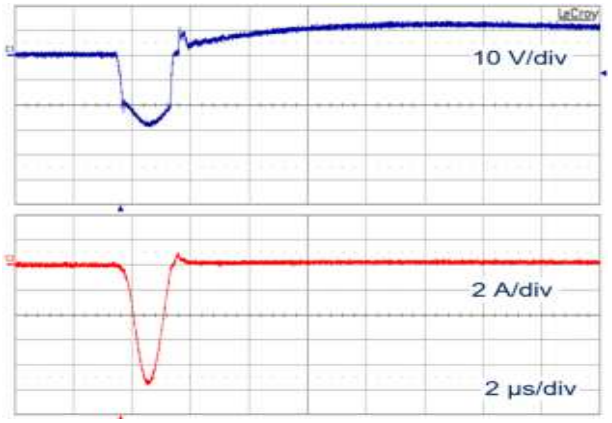


Figure 10. Response to ISO 7637-3 pulse 2a: +85 V

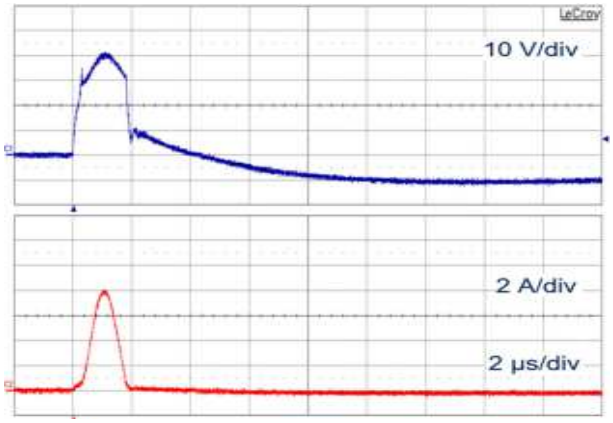


Figure 11. Response to ISO 7637-3 pulse 3a: -150 V

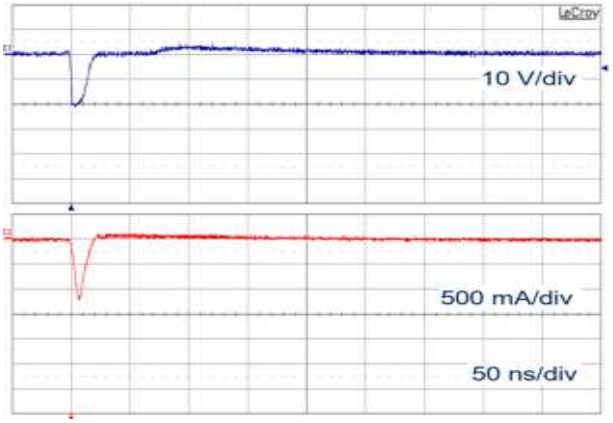


Figure 12. Response to ISO 7637-3 pulse 3b: +150 V

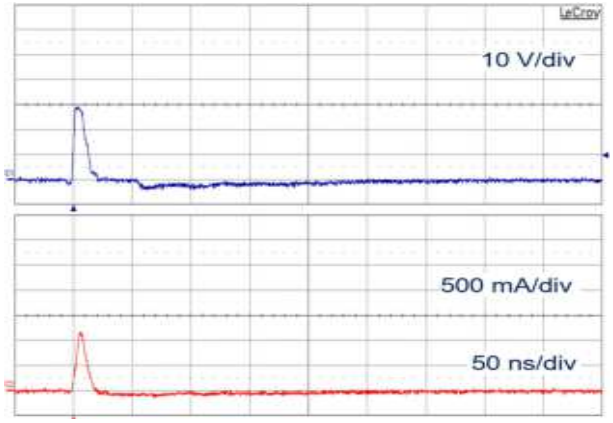

# 2 Package information

To meet environmental requirements, ST offers these devices in different grades of ECOPACK packages, depending on their level of environmental compliance. ECOPACK specifications, grade definitions, and product status are available at: www.st.com. ECOPACK is an ST trademark.

## 2.1 Package information

**Figure 13. SOD323 package outline**

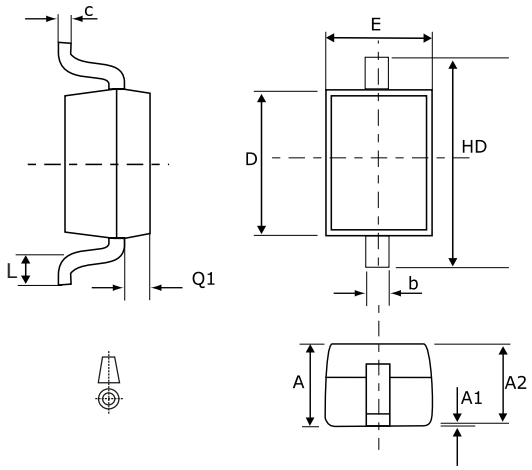


**Table 3. SOD323 package mechanical data**

| Ref. | Dimensions | |
|---|---|---|
| | Millimeters | |
| | Min. | Max. |
| A | | 1.17 |
| A1 | 0.00 | 0.10 |
| A2 | 0.93 | 1.01 |
| b | 0.25 | 0.44 |
| c | 0.10 | 0.25 |
| D | 1.52 | 1.80 |
| E | 1.11 | 1.45 |
| HD | 2.30 | 2.70 |
| L | 0.10 | 0.46 |
| Q1 | 0.10 | 0.41 |

## 2.2 Packing information

**Figure 14. Marking**

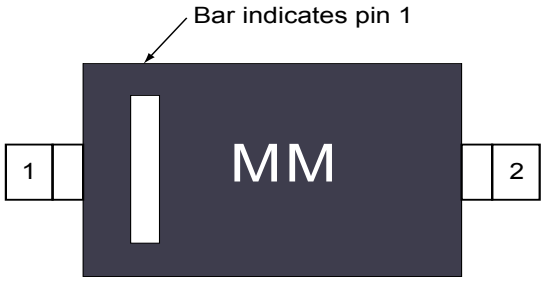


MM: Marking

The marking can be rotated by a multiple of 90° to differentiate assembly location.

**Figure 15. Package orientation in reel**

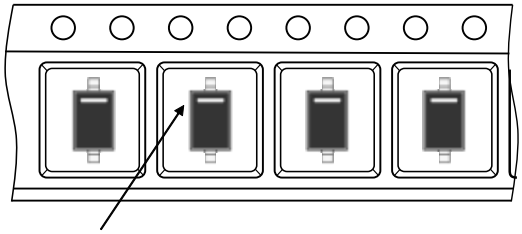


Note: Pocket dimensions are not on scale
Pocket shape may vary depending on package

**Figure 16. Tape leader and trailer dimensions**

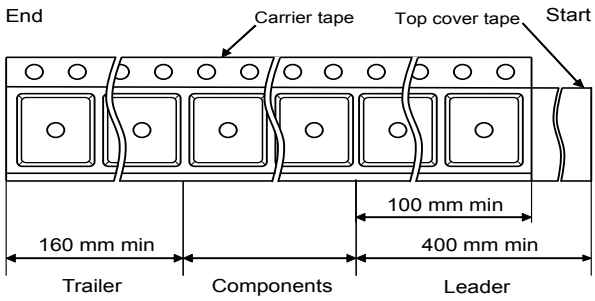


**Figure 17. Tape and reel orientation**

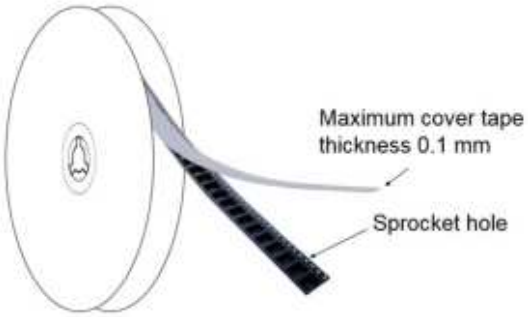


**Figure 18. 7" reel dimension for ESDLIN1524BJ**

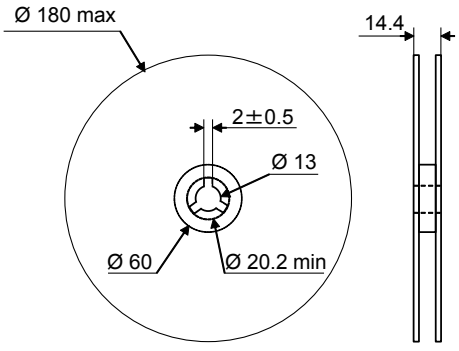


**Figure 19. Inner box dimension for 7" reel**

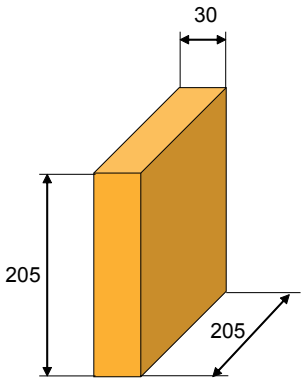

Figure 20. 13” reel dimensions for ESDLIN1524BJ HQ

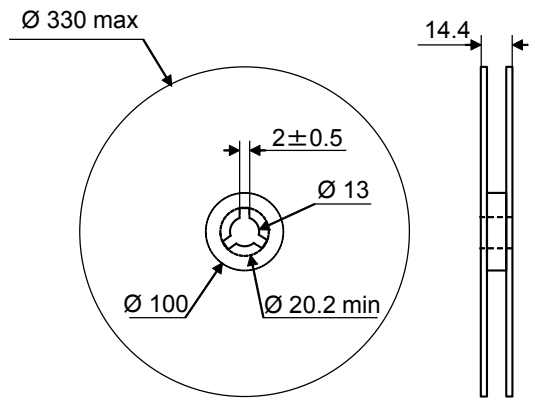


Figure 21. Inner box dimensions for 13" reel

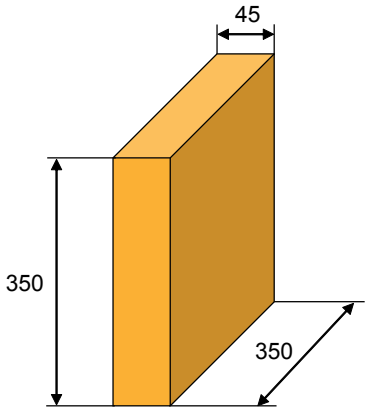


Figure 22. Tape outline

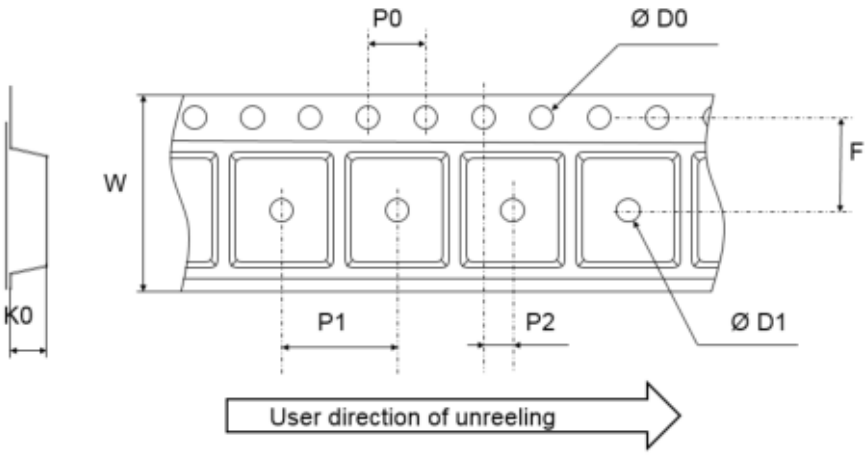


Note: Pocket dimensions are not on scale
Pocket shape may vary depending on package

Table 4. Tape dimension values

| Ref. | Dimensions | | |
|---|---|---|---|
| | Millimeters | | |
| | Min. | Typ. | Max. |
| D0 | 1.50 | 1.55 | 1.60 |
| D1 | 1.00 | | |
| F | 3.45 | 3.50 | 3.55 |
| K0 | 1.12 | 1.22 | 1.32 |
| P0 | 3.90 | 4.00 | 4.10 |
| P1 | 3.90 | 4.00 | 4.10 |
| P2 | 1.95 | 2.00 | 2.05 |
| W | 7.90 | 8.00 | 8.30 |

# 3 Recommendations on PCB assembly

## 3.1 Footprint

Figure 23. **Recommended footprint in mm**

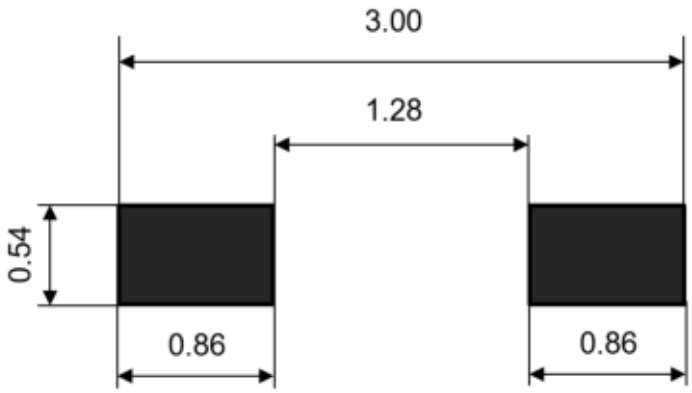


## 3.2 Stencil opening design

Stencil opening thickness: 75 to 125 µm / 3 to 5 mils
Pad stencil aperture ratio: 90%

Figure 24. **Stencil opening recommendations**

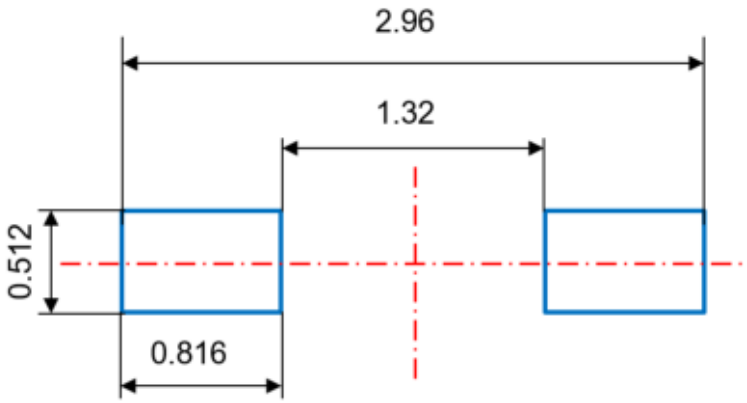

## 3.3 Solder paste

1. Halide-free flux, qualification ROL0 according to ANSI/J-STD-004.
2. “No clean” solder paste recommended.
3. Offers a high tack force to resist component movement during high speed.
4. Use solder paste with fine particles: powder particle size is 20-38 µm.

## 3.4 Placement

1. Manual positioning is not recommended.
2. It is recommended to use the lead recognition capabilities of the placement system, not the outline centering.
3. Standard tolerance of ±0.05 mm is recommended.
4. 1.0 N placement force is recommended. Too much placement force can lead to squeezed out solder paste and cause solder joints to short. Too low placement force can lead to insufficient contact between package and solder paste that could cause open solder joints or badly centered packages.
5. To improve the package placement accuracy, a bottom side optical control should be performed with a high resolution tool.
6. For assembly, a perfect supporting of the PCB (all the more on flexible PCB) is recommended during solder paste printing, pick and place and reflow soldering by using optimized tools.

## 3.5 PCB design preference

1. To control the solder paste amount, the closed via is recommended instead of open vias.
2. The position of tracks and open vias in the solder area should be well balanced. A symmetrical layout is paste printing, pick and place and reflow soldering by using optimized tools.

## 3.6 Reflow profile

**Figure 25. ST ECOPACK recommended soldering reflow profile for PCB mounting**

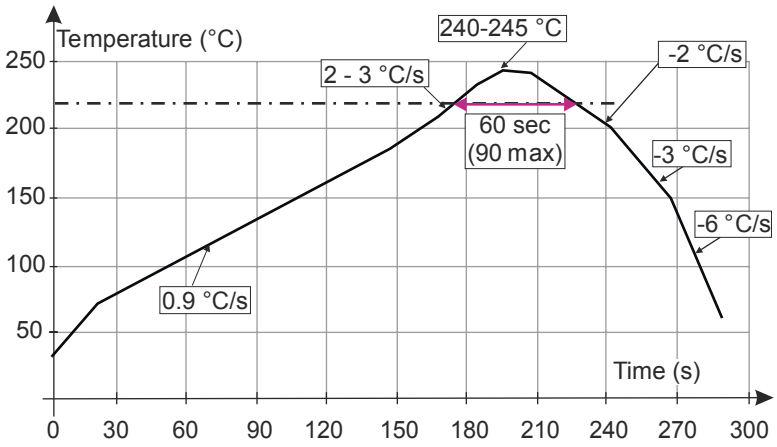


*Note: Minimize air convection currents in the reflow oven to avoid component movement. $O_2$ rate inside the oven must be below 500 ppm. Maximum soldering profile corresponds to the latest IPC/JEDEC J-STD-020.*

# 4 Ordering information

**Table 5. Ordering information**

| Order code | Marking[1] | Package | Weight | Base qty. | Delivery mode |
|---|---|---|---|---|---|
| ESDLIN1524BJ | 24 | SOD 323 | 5 mg | 3000 | Tape and reel |
| ESDLIN1524BJ-HQ | 24 | SOD 323 | 5 mg | 10000 | Tape and reel |

1. *The marking can be rotated by multiples of 90° to differentiate assembly location*

## Revision history

Table 6. **Document revision history**

| Date | Version | Changes |
|---|---|---|
| 28-Aug-2006 | 1 | Initial release. |
| 22-Sep-2006 | 2 | Added Figure 6 Placement and layout recommendations |
| 18-Jan-2013 | 3 | Updated Table6. Added Figure 10 and Figure 11. |
| 17-Oct-2017 | 4 | Updated title and cover page.<br>Updated Table 1: "Absolute maximum ratings (limiting values) Tamb = 25° C" and Table 3: "Electrical characteristics ($T_{amb}$ = 25 °C)".<br>Added Figure 8: "Response to ISO 7637-3 pulse 3a (Us = -150 V)", Figure 9: "Response to ISO 7637-3 pulse 3b (Us = 100 V)", Figure 10: "ESD response to ISO 16605 ( C = 150 pF, R = 330 Ω, 8 kV contact)" and Figure 11: "ESD response to ISO 16605 ( C = 150 pF, R = 330 Ω, 8 kV contact)".<br>Minor text changes to improve readability. |
| 29-Dec-2021 | 5 | Added reel definitions.<br>Minor text changes. |
| 25-Nov-2025 | 6 | Updated Table 1, Section Pin layout, and Figure 2.<br>Minor text changes. |

**IMPORTANT NOTICE – READ CAREFULLY**

STMicroelectronics NV and its subsidiaries (“ST”) reserve the right to make changes, corrections, enhancements, modifications, and improvements to ST products and/or to this document at any time without notice.

In the event of any conflict between the provisions of this document and the provisions of any contractual arrangement in force between the purchasers and ST, the provisions of such contractual arrangement shall prevail.

The purchasers should obtain the latest relevant information on ST products before placing orders. ST products are sold pursuant to ST’s terms and conditions of sale in place at the time of order acknowledgment.

The purchasers are solely responsible for the choice, selection, and use of ST products and ST assumes no liability for application assistance or the design of the purchasers’ products.

No license, express or implied, to any intellectual property right is granted by ST herein.

Resale of ST products with provisions different from the information set forth herein shall void any warranty granted by ST for such product.

If the purchasers identify an ST product that meets their functional and performance requirements but that is not designated for the purchasers' market segment, the purchasers shall contact ST for more information.

ST and the ST logo are trademarks of ST. For additional information about ST trademarks, refer to www.st.com/trademarks. All other product or service names are the property of their respective owners.

Information in this document supersedes and replaces information previously supplied in any prior versions of this document.

© 2025 STMicroelectronics – All rights reserved