STB50NF25
STP50NF25

N-channel 250V - 0.055Ω - 45A - D²PAK - TO-220 low gate charge STripFET™ Power MOSFET

Features

Type	V_{DSS}	$R_{DS(on)}$ Max	I_D	P_W
STP50NF25	250 V	<0.069 Ω	45 A	160 W
STB50NF25	250 V	<0.069 Ω	45 A	160 W

- 100% avalanche tested
- Gate charge minimized
- Low intrinsic capacitances

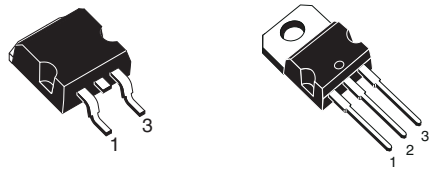

D²PAK TO-220

Application

Switching applications

Description

This Power MOSFET series realized with STMicroelectronics unique STripFET™ process has specifically been designed to minimize on-resistance and gate charge. It is therefore suitable as primary side switch allowing high efficiencies.

Figure 1. Internal schematic diagram

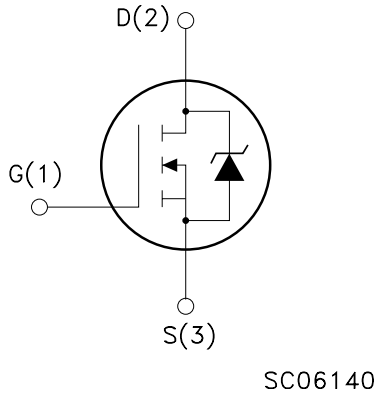

Table 1. Device summary

Order codes	Marking	Package	Packaging
STP50NF25	50NF25	TO-220	Tube
STB50NF25	50NF25	D²PAK	Tape & reel

Contents

1 Electrical ratings 3

2 Electrical characteristics 4

2.1 Electrical characteristics (curves) 6

3 Test circuit 8

4 Package mechanical data 9

5 Packaging mechanical data 12

6 Revision history 13

1 Electrical ratings

Table 2. Absolute maximum ratings

Symbol	Parameter	Value	Unit
V_{DS}	Drain-source voltage	250	V
V_{GS}	Gate-source voltage	±20	V
I_D (1)	Drain current (continuous) at T_C = 25 °C	45	A
I_D (1)	Drain current (continuous) at T_C = 100 °C	28	A
I_{DM} (2)	Drain current (pulsed)	180	A
P_{TOT}	Total dissipation at T_C = 25 °C	160	W
	Derating factor	1.28	W/°C
dv/dt (3)	Peak diode recovery voltage slope	10	V/ns
T_j T_{stg}	Operating junction temperature Storage temperature	-55 to 150	°C

1. Value limited by wire bonding
2. Pulse width limited by safe operating area
3. $I_{SD} \leq 45$ A, di/dt ≤ 200 A/µs, $V_{DD} = 80\%\ V_{(BR)DSS}$

Table 3. Thermal data

Symbol	Parameter	Value	Unit
Rthj-case	Thermal resistance junction-case max	0.78	°C/W
Rthj-amb	Thermal resistance junction-amb max	62.5	°C/W
T_l	Maximum lead temperature for soldering purpose	300	°C

Table 4. Avalanche data

Symbol	Parameter	Value	Unit
I_{AR} (1)	Avalanche current, repetitive or not-repetitive	32	A
E_{AS} (2)	Single pulse avalanche energy	160	mJ

1. Pulse width limited by Tjmax
2. Starting T_J= 25 °C, $I_D = I_{AR}$, V_{DD} = 50 V

2 Electrical characteristics

(T_{CASE}=25°C unless otherwise specified)

Table 5. On/off states

Symbol	Parameter	Test conditions	Min.	Typ.	Max.	Unit
$V_{(BR)DSS}$	Drain-source breakdown voltage	I_D = 1 mA, V_{GS}= 0	250			V
I_{DSS}	Zero gate voltage drain current (V_{GS} = 0)	V_{DS} = Max rating, V_{DS} = Max rating @125 °C			1 10	µA µA
I_{GSS}	Gate body leakage current (V_{DS} = 0)	V_{GS} = ±20 V			±100	nA
$V_{GS(th)}$	Gate threshold voltage	V_{DS}= V_{GS}, I_D = 250 µA	2	3	4	V
$R_{DS(on)}$	Static drain-source on resistance	V_{GS}= 10 V, I_D= 22 A		0.055	0.069	Ω

Table 6. Dynamic

Symbol	Parameter	Test conditions	Min.	Typ.	Max.	Unit
g_{fs} (1)	Forward transconductance	V_{DS} =10 V, I_D = 22 A		20		S
C_{iss} C_{oss} C_{rss}	Input capacitance Output capacitance Reverse transfer capacitance	V_{DS} =25 V, f=1 MHz, V_{GS}=0		2670 465 70.5		pF pF pF
Q_g Q_{gs} Q_{gd}	Total gate charge Gate-source charge Gate-drain charge	V_{DD}=200 V, I_D = 45 A V_{GS} =10 V *(see Figure 14)*		68.2 12.2 33.4		nC nC nC
R_G	Gate input resistance	f=1 MHz Gate Bias, Bias=0 Test signal level=20 mV open drain		1.1		Ω

1. Pulsed: pulse duration=300µs, duty cycle 1.5%

Table 7. Switching times

Symbol	Parameter	Test conditions	Min	Typ	Max	Unit
$t_{d(on)}$ t_r	Turn-on delay time Rise time	V_{DD} = 125 V, I_D = 22 A, R_G = 4.7 Ω, V_{GS} = 10 V *(see Figure 13)*		45 26		ns ns
$t_{d(off)}$ t_f	Off-voltage rise time Fall time	V_{DD} = 125 V, I_D = 22 A, R_G = 4.7 Ω, V_{GS} = 10 V *(see Figure 13)*		63 20		ns ns

Table 8. Source drain diode

Symbol	Parameter	Test conditions	Min	Typ	Max	Unit
I_{SD} I_{SDM}	Source-drain current Source-drain current (pulsed)				45 180	A A
V_{SD}	Forward on voltage	I_{SD} = 45 A, V_{GS} = 0			1.5	V
t_{rr} Q_{rr} I_{RRM}	Reverse recovery time Reverse recovery charge Reverse recovery current	I_{SD}= 45 A, di/dt = 100 A/µs, V_{DD} = 60 V *(see Figure 18)*		198 1.5 15		ns µC A
t_{rr} Q_{rr} I_{RRM}	Reverse recovery time Reverse recovery charge Reverse recovery current	I_{SD} = 45 A, di/dt = 100 A/µs, V_{DD} = 60 V, Tj = 150 °C *(see Figure 18)*		256 2.2 17		ns µC A

2.1 Electrical characteristics (curves)

Figure 2. Safe operating area

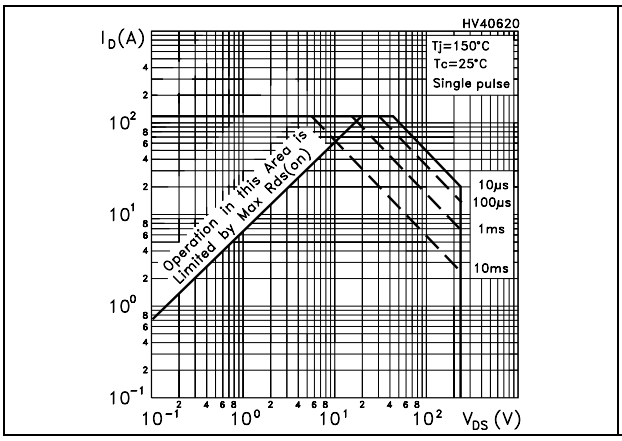

Figure 3. Thermal impedance

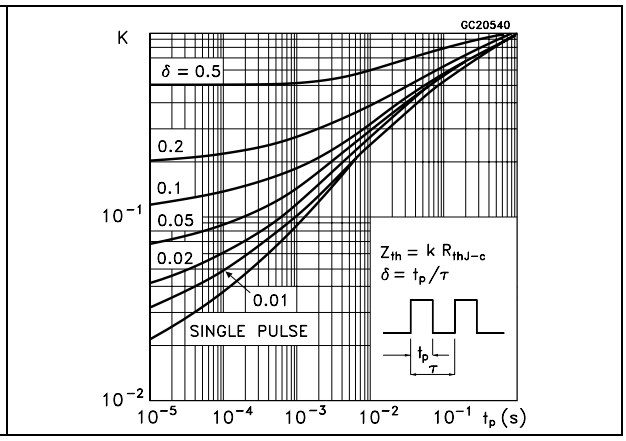

Figure 4. Output characteristics

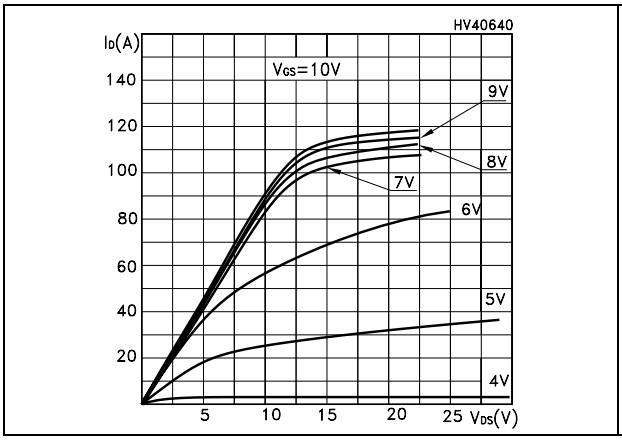

Figure 5. Transfer characteristics

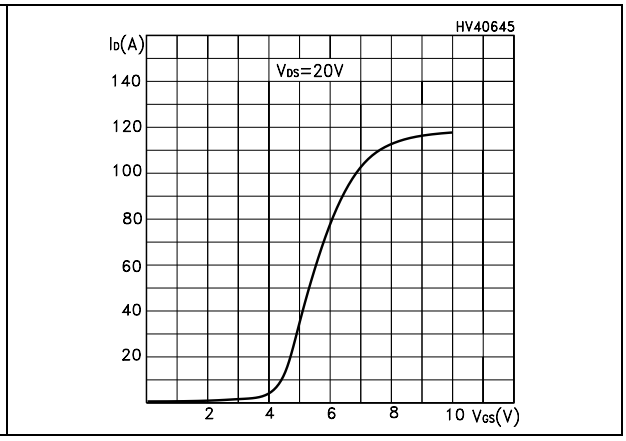

Figure 6. Normalized B_{VDSS} vs temperature

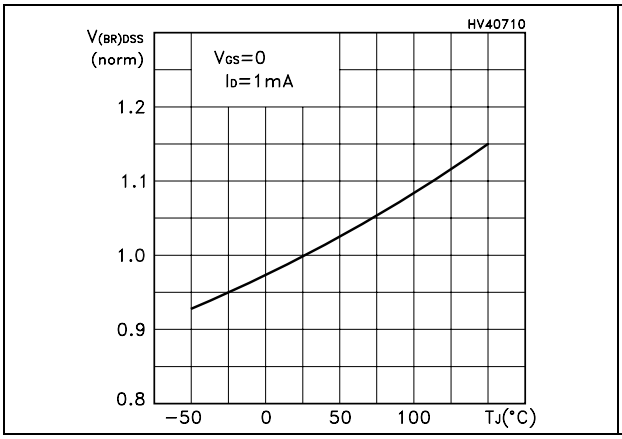

Figure 7. Static drain-source on resistance

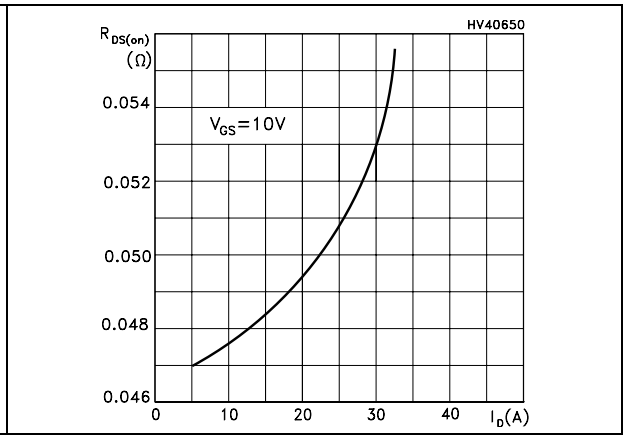

Figure 8. Gate charge vs gate-source voltage

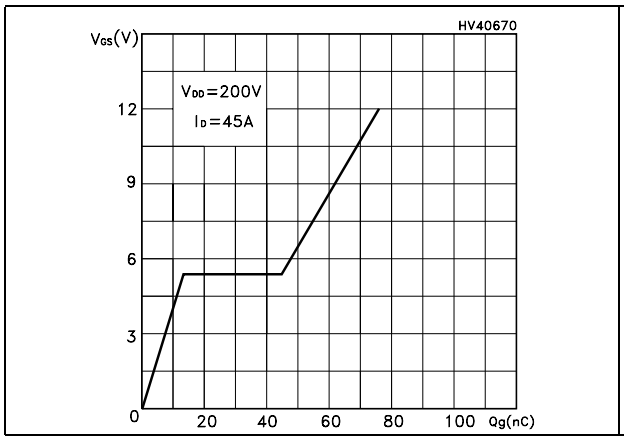

Figure 9. Capacitance variations

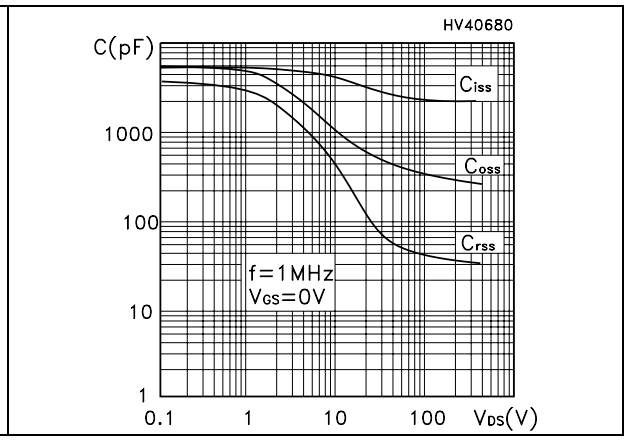

Figure 10. Normalized gate threshold voltage vs temperature

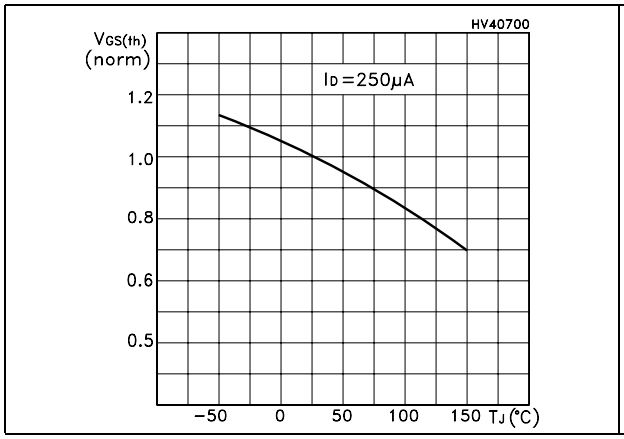

Figure 11. Normalized on resistance vs temperature

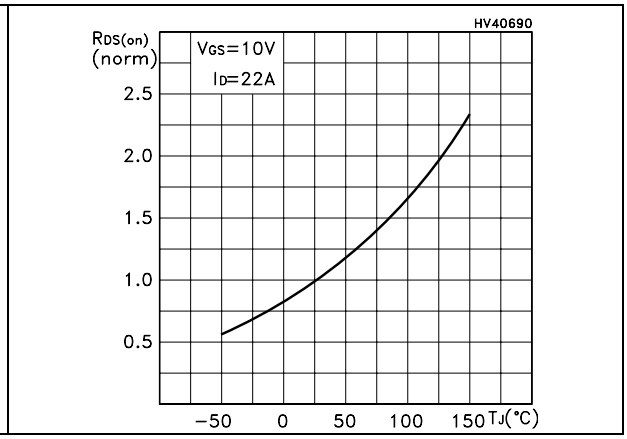

Figure 12. Source-drain diode forward characteristics

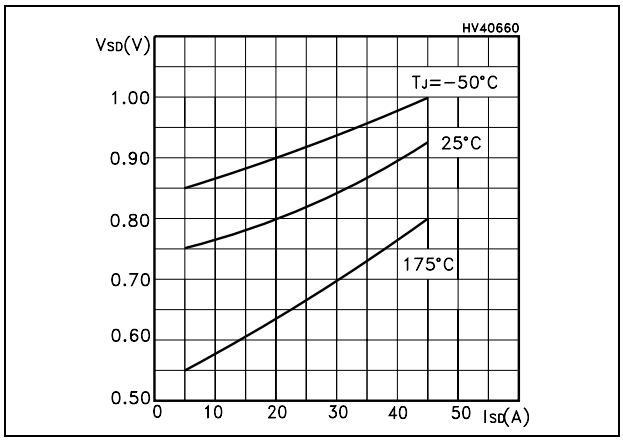

3 Test circuit

Figure 13. Switching times test circuit for resistive load

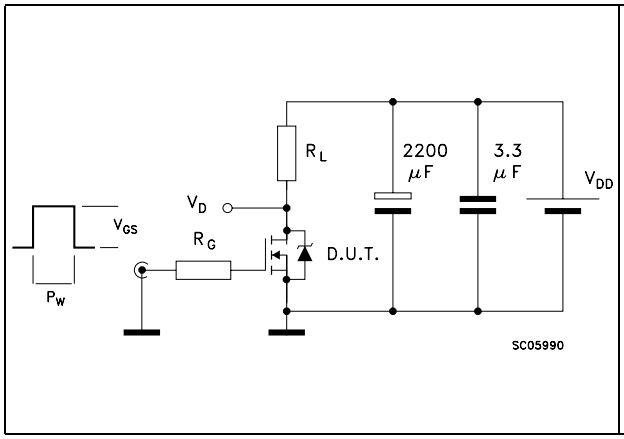

Figure 14. Gate charge test circuit

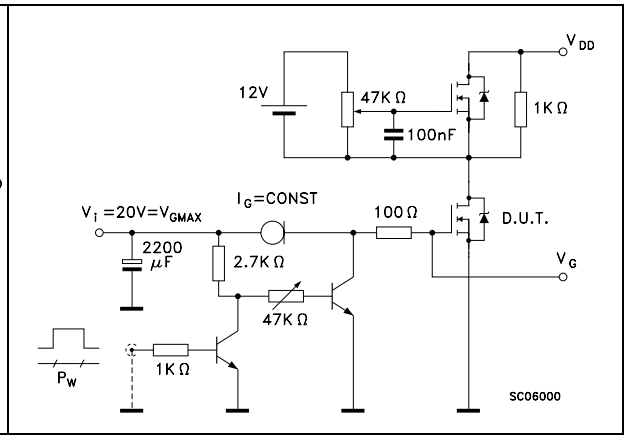

Figure 15. Test circuit for inductive load switching and diode recovery times

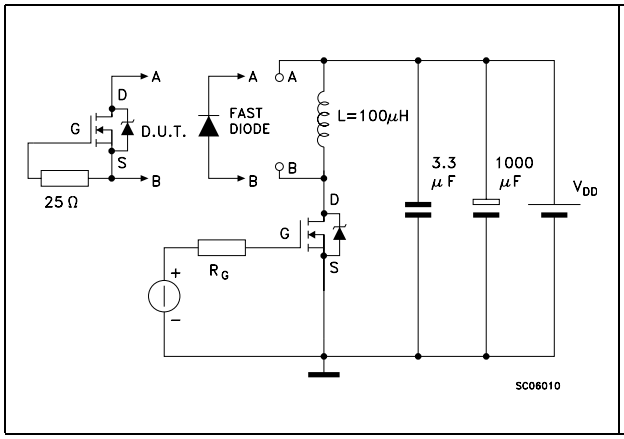

Figure 16. Unclamped Inductive load test circuit

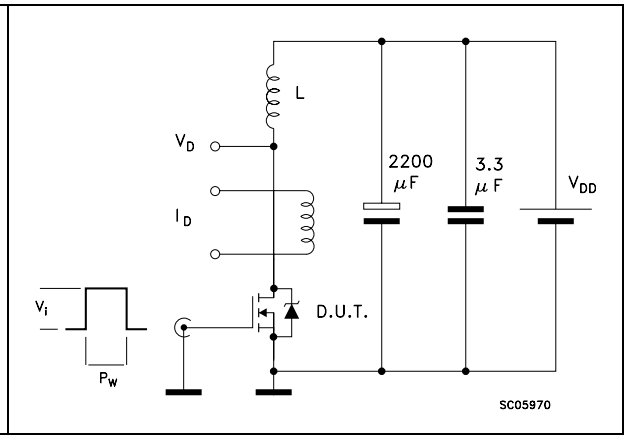

Figure 17. Unclamped inductive waveform

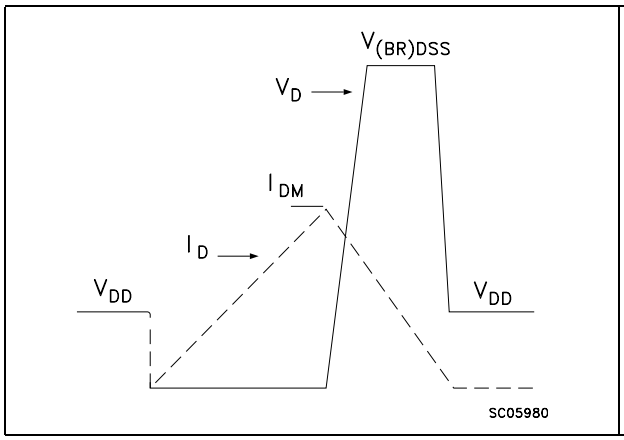

Figure 18. Switching time waveform

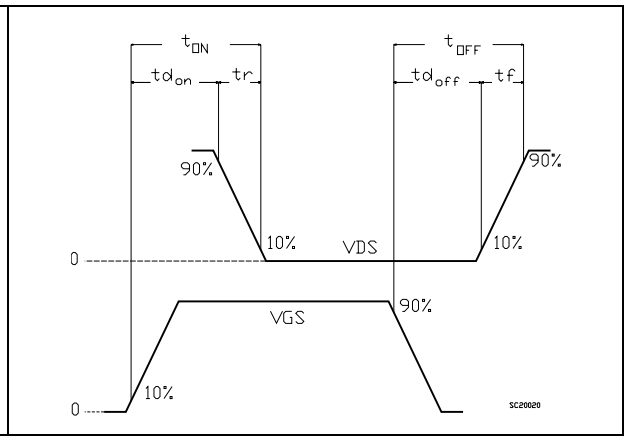

4 Package mechanical data

In order to meet environmental requirements, ST offers these devices in ECOPACK® packages. These packages have a Lead-free second level interconnect. The category of second level interconnect is marked on the package and on the inner box label, in compliance with JEDEC Standard JESD97. The maximum ratings related to soldering conditions are also marked on the inner box label. ECOPACK is an ST trademark. ECOPACK specifications are available at: *www.st.com*

TO-220 mechanical data

Dim	mm			inch		
	Min	Typ	Max	Min	Typ	Max
A	4.40		4.60	0.173		0.181
b	0.61		0.88	0.024		0.034
b1	1.14		1.70	0.044		0.066
c	0.49		0.70	0.019		0.027
D	15.25		15.75	0.6		0.62
D1		1.27			0.050	
E	10		10.40	0.393		0.409
e	2.40		2.70	0.094		0.106
e1	4.95		5.15	0.194		0.202
F	1.23		1.32	0.048		0.051
H1	6.20		6.60	0.244		0.256
J1	2.40		2.72	0.094		0.107
L	13		14	0.511		0.551
L1	3.50		3.93	0.137		0.154
L20		16.40			0.645	
L30		28.90			1.137	
∅P	3.75		3.85	0.147		0.151
Q	2.65		2.95	0.104		0.116

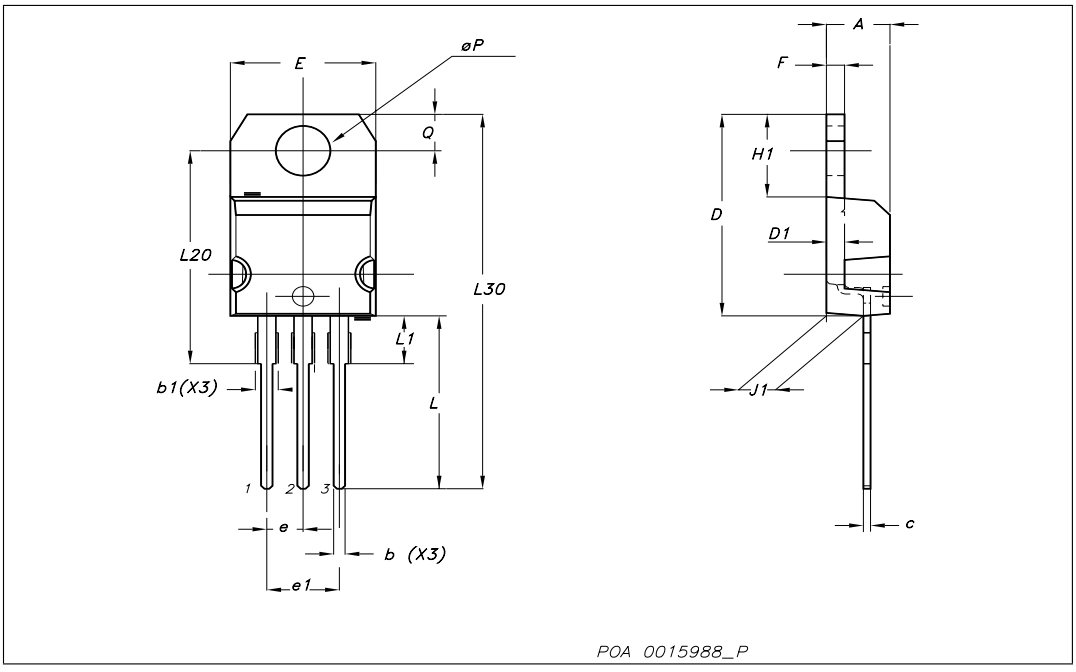

D²PAK MECHANICAL DATA

DIM.	mm.			inch		
	MIN.	TYP	MAX.	MIN.	TYP.	MAX.
A	4.4		4.6	0.173		0.181
A1	2.49		2.69	0.098		0.106
A2	0.03		0.23	0.001		0.009
B	0.7		0.93	0.027		0.036
B2	1.14		1.7	0.044		0.067
C	0.45		0.6	0.017		0.023
C2	1.23		1.36	0.048		0.053
D	8.95		9.35	0.352		0.368
D1		8			0.315	
E	10		10.4	0.393		
E1		8.5			0.334	
G	4.88		5.28	0.192		0.208
L	15		15.85	0.590		0.625
L2	1.27		1.4	0.050		0.055
L3	1.4		1.75	0.055		0.068
M	2.4		3.2	0.094		0.126
R		0.4			0.015	
V2	0º		4º			

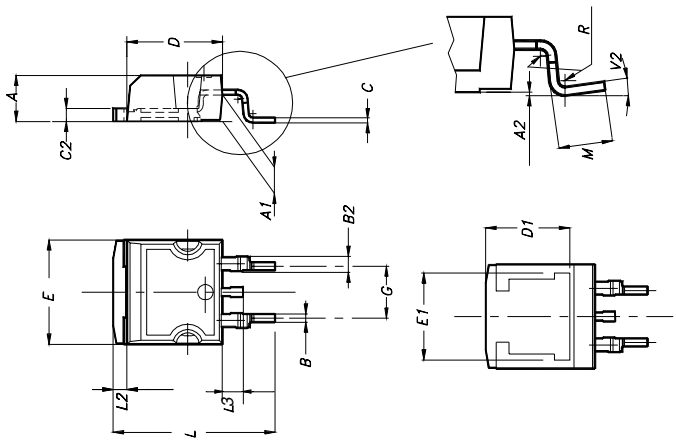

5 Packaging mechanical data

D²PAK FOOTPRINT

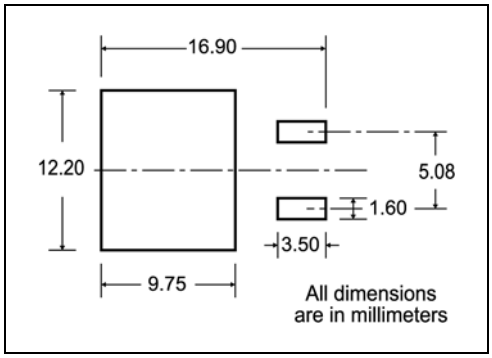

TAPE AND REEL SHIPMENT

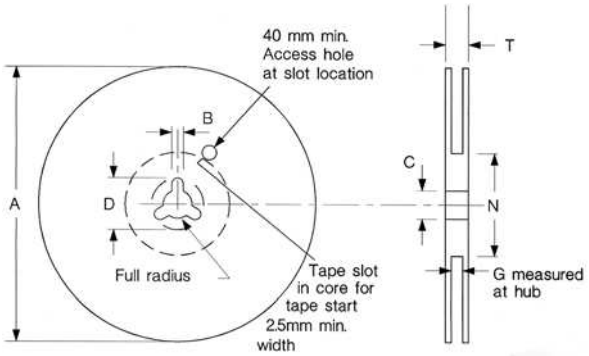

REEL MECHANICAL DATA

DIM.	mm		inch	
	MIN.	MAX.	MIN.	MAX.
A		330		12.992
B	1.5		0.059	
C	12.8	13.2	0.504	0.520
D	20.2		0795	
G	24.4	26.4	0.960	1.039
N	100		3.937	
T		30.4		1.197

BASE QTY	BULK QTY
1000	1000

TAPE MECHANICAL DATA

DIM.	mm		inch	
	MIN.	MAX.	MIN.	MAX.
A0	10.5	10.7	0.413	0.421
B0	15.7	15.9	0.618	0.626
D	1.5	1.6	0.059	0.063
D1	1.59	1.61	0.062	0.063
E	1.65	1.85	0.065	0.073
F	11.4	11.6	0.449	0.456
K0	4.8	5.0	0.189	0.197
P0	3.9	4.1	0.153	0.161
P1	11.9	12.1	0.468	0.476
P2	1.9	2.1	0.075	0.082
R	50		1.574	
T	0.25	0.35	0.0098	0.0137
W	23.7	24.3	0.933	0.956

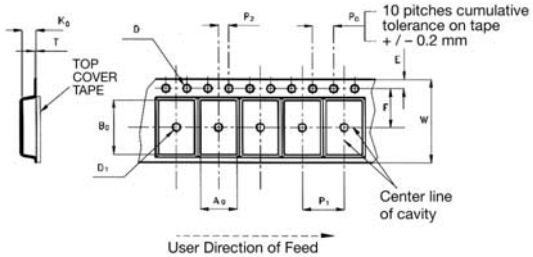

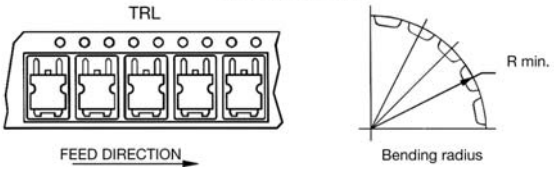

* on sales type

6 Revision history

Table 9. Document revision history

Date	Revision	Changes
07-Mar-2007	1	First release
10-Mar-2007	2	Typo mistake on page 1 (marking)
13-Apr-2007	3	Corrected value on *Table 6.*
14-Nov-2007	4	Added new section: *Electrical characteristics (curves)*

Please Read Carefully:

Information in this document is provided solely in connection with ST products. STMicroelectronics NV and its subsidiaries (“ST”) reserve the right to make changes, corrections, modifications or improvements, to this document, and the products and services described herein at any time, without notice.

All ST products are sold pursuant to ST’s terms and conditions of sale.

Purchasers are solely responsible for the choice, selection and use of the ST products and services described herein, and ST assumes no liability whatsoever relating to the choice, selection or use of the ST products and services described herein.

No license, express or implied, by estoppel or otherwise, to any intellectual property rights is granted under this document. If any part of this document refers to any third party products or services it shall not be deemed a license grant by ST for the use of such third party products or services, or any intellectual property contained therein or considered as a warranty covering the use in any manner whatsoever of such third party products or services or any intellectual property contained therein.

UNLESS OTHERWISE SET FORTH IN ST’S TERMS AND CONDITIONS OF SALE ST DISCLAIMS ANY EXPRESS OR IMPLIED WARRANTY WITH RESPECT TO THE USE AND/OR SALE OF ST PRODUCTS INCLUDING WITHOUT LIMITATION IMPLIED WARRANTIES OF MERCHANTABILITY, FITNESS FOR A PARTICULAR PURPOSE (AND THEIR EQUIVALENTS UNDER THE LAWS OF ANY JURISDICTION), OR INFRINGEMENT OF ANY PATENT, COPYRIGHT OR OTHER INTELLECTUAL PROPERTY RIGHT.

UNLESS EXPRESSLY APPROVED IN WRITING BY AN AUTHORIZED ST REPRESENTATIVE, ST PRODUCTS ARE NOT RECOMMENDED, AUTHORIZED OR WARRANTED FOR USE IN MILITARY, AIR CRAFT, SPACE, LIFE SAVING, OR LIFE SUSTAINING APPLICATIONS, NOR IN PRODUCTS OR SYSTEMS WHERE FAILURE OR MALFUNCTION MAY RESULT IN PERSONAL INJURY, DEATH, OR SEVERE PROPERTY OR ENVIRONMENTAL DAMAGE. ST PRODUCTS WHICH ARE NOT SPECIFIED AS "AUTOMOTIVE GRADE" MAY ONLY BE USED IN AUTOMOTIVE APPLICATIONS AT USER’S OWN RISK.

Resale of ST products with provisions different from the statements and/or technical features set forth in this document shall immediately void any warranty granted by ST for the ST product or service described herein and shall not create or extend in any manner whatsoever, any liability of ST.

ST and the ST logo are trademarks or registered trademarks of ST in various countries.

Information in this document supersedes and replaces all information previously supplied.

The ST logo is a registered trademark of STMicroelectronics. All other names are the property of their respective owners.

© 2007 STMicroelectronics - All rights reserved

STMicroelectronics group of companies

Australia - Belgium - Brazil - Canada - China - Czech Republic - Finland - France - Germany - Hong Kong - India - Israel - Italy - Japan - Malaysia - Malta - Morocco - Singapore - Spain - Sweden - Switzerland - United Kingdom - United States of America

www.st.com