STS4DNF60

N-channel 60V - 0.070Ω - 4A - SO-8
STripFET™ Power MOSFET

Features

Type	V_{DSS}	$R_{DS(on)}$	I_D
STS4DNF60	60V	<0.090Ω	4A

- Standard outline for easy automated surface mount assembly
- Low threshold drive

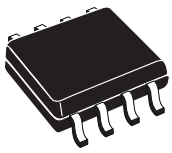

SO-8

Description

This Power MOSFET is the latest development of STMicroelectronics unique “single feature size” strip-based process. The resulting transistor shows extremely high packing density for low on-resistance, rugged avalanche characteristics and less critical alignment steps therefore a remarkable manufacturing reproducibility.

Application

- Switching applications

Figure 1. Internal schematic diagram

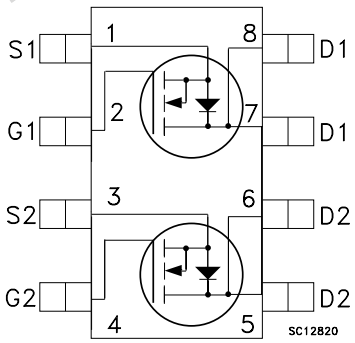

Table 1. Device summary

Order code	Marking	Package	Packaging
STS4DNF60	4DF60	SO-8	Tape & reel

Obsolete Product(s) - Obsolete Product(s)

Contents

1 Electrical ratings 3

2 Electrical characteristics 4

2.1 Electrical characteristics (curves) 6

3 Test circuits 8

4 Package mechanical data 9

5 Revision history 11

Obsolete Product(s) - Obsolete Product(s)

1 Electrical ratings

Table 2. Absolute maximum ratings

Symbol	Parameter	Value	Unit
V_{DS}	Drain-source voltage (V_{GS} = 0)	60	V
V_{GS}	Gate- source voltage	± 20	V
I_D	Drain current (continuous) at T_C = 25°C	4	A
I_D	Drain current (continuous) at T_C = 100°C	2.5	A
I_{DM} (1)	Drain current (pulsed)	16	A
P_{TOT}(2)	Total dissipation at T_C = 25°C	2	W
T_j T_{stg}	Operating junction temperature Storage temperature	-55 to 150	°C

1. Pulse width limited by safe operating area
2. P_{TOT}=1.6W for single operation

Table 3. Thermal data

Symbol	Parameter	Value	Unit
Rthj-pcb	Thermal resistance junction-pcb D.O.(1)	62.5	°C/W

1. When mounted on inch² FR-4 board, 2 Oz Cu, t ≤ 10sec, dual operation

Obsolete Product(s) - Obsolete Product(s)

2 Electrical characteristics

(Tcase =25°C unless otherwise specified)

Table 4. On /off states

Symbol	Parameter	Test conditions	Min.	Typ.	Max.	Unit
$V_{(BR)DSS}$	Drain-source breakdown voltage	I_D = 250µA, V_{GS} = 0	60			V
I_{DSS}	Zero gate voltage drain current (V_{GS} = 0) V_{DS} = Max rating V_{DS} = Max rating, T_C=125°C				1 10	µA µA
I_{GSS}	Gate-body leakage current (V_{DS} = 0)	V_{GS} = ± 20V			± 100	nA
$V_{GS(th)}$	Gate threshold voltage	V_{DS} = V_{GS}, I_D = 250µA	2		4	V
$R_{DS(on)}$	Static drain-source on resistance	V_{GS} = 10V, I_D = 2A		0.070	0.090	Ω

Table 5. Dynamic

Symbol	Parameter	Test conditions	Min.	Typ.	Max.	Unit
g_{fs}	Forward transconductance	V_{DS} =25V, I_D= 2A		25		S
C_{iss} C_{oss} C_{rss}	Input capacitance Output capacitance Reverse transfer capacitance	V_{DS} = 25 V, f = 1 MHz, V_{GS} = 0		315 70 30		pF pF pF
Q_g Q_{gs} Q_{gd}	Total gate charge Gate-source charge Gate-drain charge	V_{DD} = 48V, I_D = 4A, V_{GS} = 10V (see *Figure 13*)		10 3.5 3.5		nC nC nC

Obsolete Product(s) - Obsolete Product(s)

Table 6. Switching times

Symbol	Parameter	Test conditions	Min.	Typ.	Max	Unit
$t_{d(on)}$ t_r	Turn-on delay time Rise time	V_{DD} = 30V, I_D = 2A, R_G = 4.7Ω, V_{GS} = 10V (see *Figure 12*)		7 18		ns ns
$t_{d(off)}$ t_f	Turn-off delay time Fall time	V_{DD} = 30V, I_D = 2A, R_G = 4.7Ω, V_{GS} = 10V (see *Figure 12*)		17 6		ns ns

Table 7. Source drain diode

Symbol	Parameter	Test conditions	Min.	Typ.	Max.	Unit
I_{SD} I_{SDM} (1)	Source-drain current Source-drain current (pulsed)				4 16	A A
V_{SD} (2)	Forward on voltage	I_{SD} = 4A, V_{GS} = 0			1.2	V
t_{rr} Q_{rr} I_{RRM}	Reverse recovery time Reverse recovery charge Reverse recovery current	I_{SD} = 4A, di/dt = 100A/µs V_{DD} = 20V, T_j = 25°C (see *Figure 17*)		45 68 3		ns nC A
t_{rr} Q_{rr} I_{RRM}	Reverse recovery time Reverse recovery charge Reverse recovery current	I_{SD} = 4A, di/dt = 100A/µs V_{DD} = 20V, T_j = 150°C (see *Figure 17*)		50 88 3.5		ns nC A

1. Pulse width limited by safe operating area
2. Pulsed: Pulse duration = 300 µs, duty cycle 1.5%

Obsolete Product(s) - Obsolete Product(s)

2.1 Electrical characteristics (curves)

Figure 2. Safe operating area

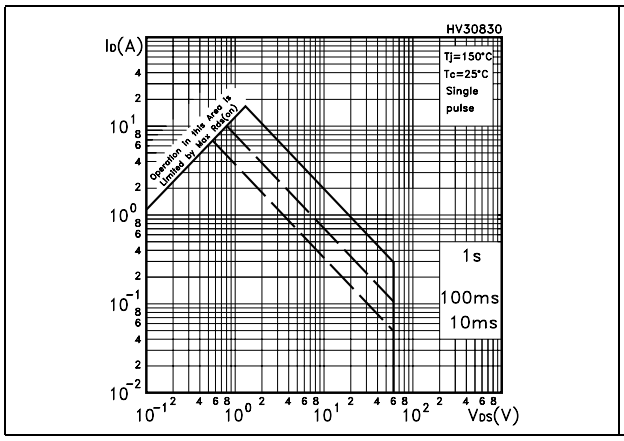

Figure 3. Thermal impedance

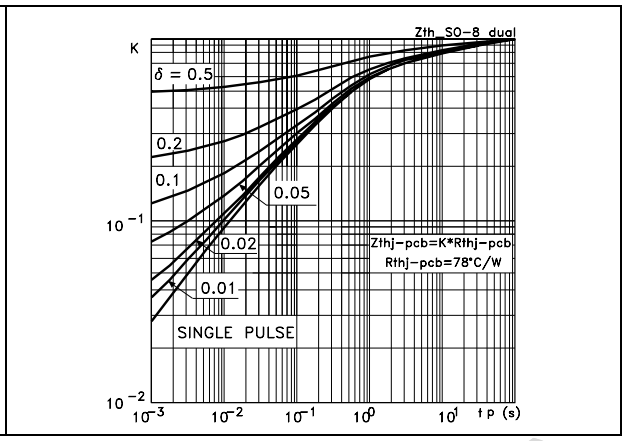

Figure 4. Output characteristics

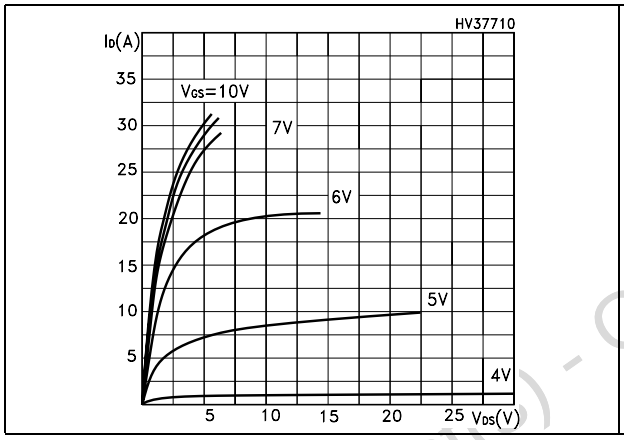

Figure 5. Transfer characteristics

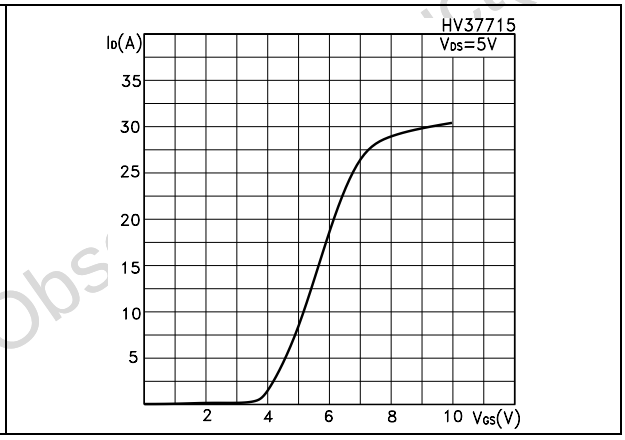

Figure 6. Source-drain diode forward characteristics

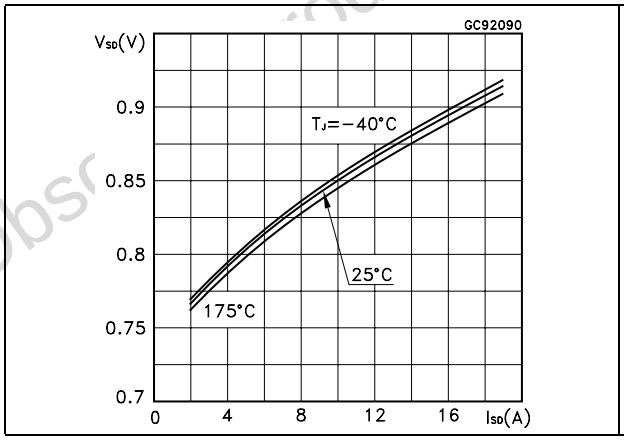

Figure 7. Static drain-source on resistance

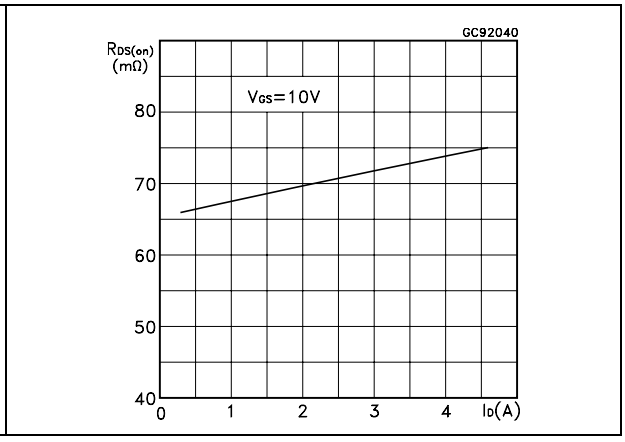

Obsolete Product(s) - Obsolete Product(s)

Figure 8. Gate charge vs gate-source voltage

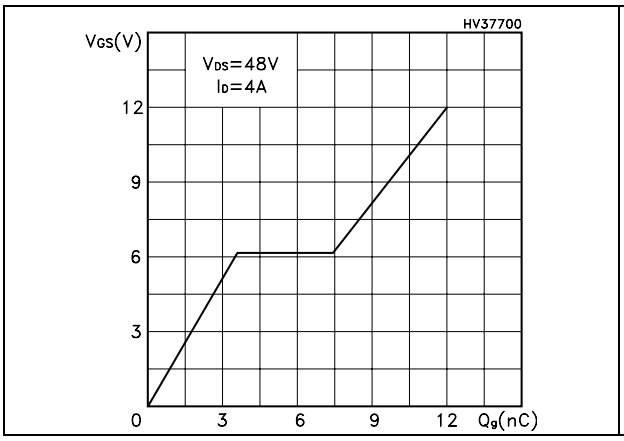

Figure 9. Capacitance variations

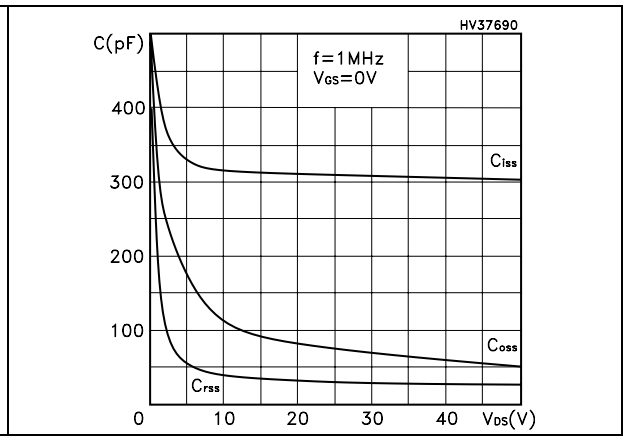

Figure 10. Normalized gate threshold voltage vs temperature

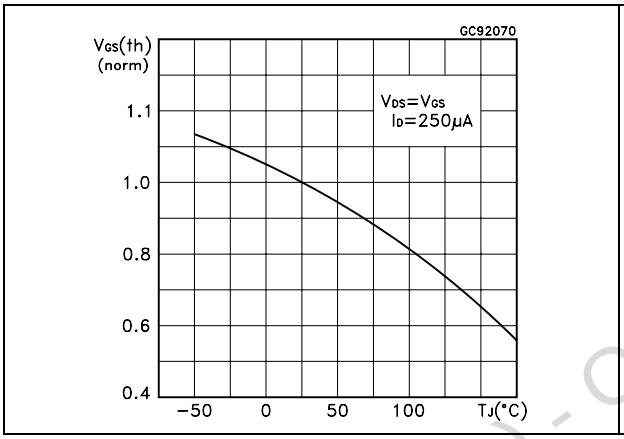

Figure 11. Normalized on resistance vs temperature

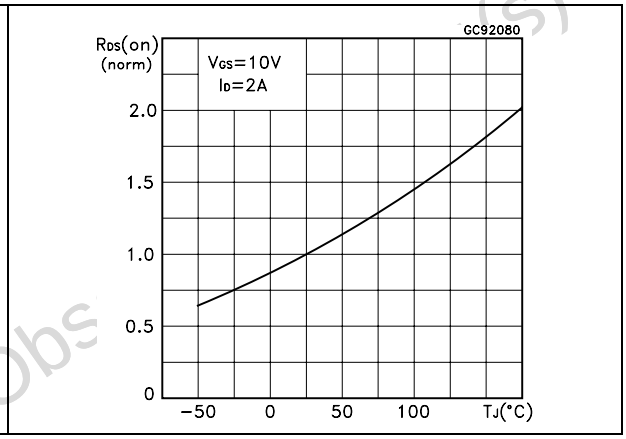

Obsolete Product(s) - Obs (s)

3 Test circuits

Figure 12. Switching times test circuit for resistive load

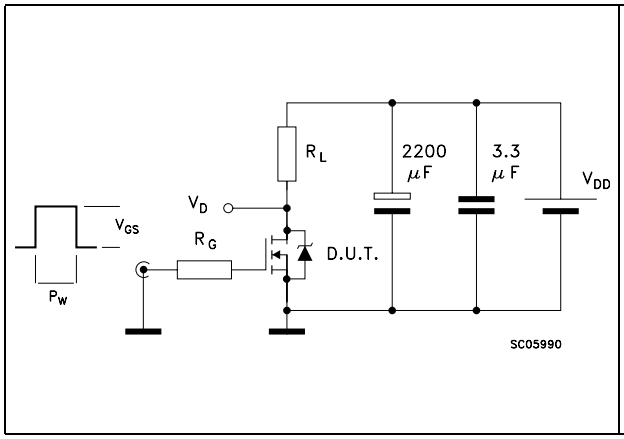

Figure 13. Gate charge test circuit

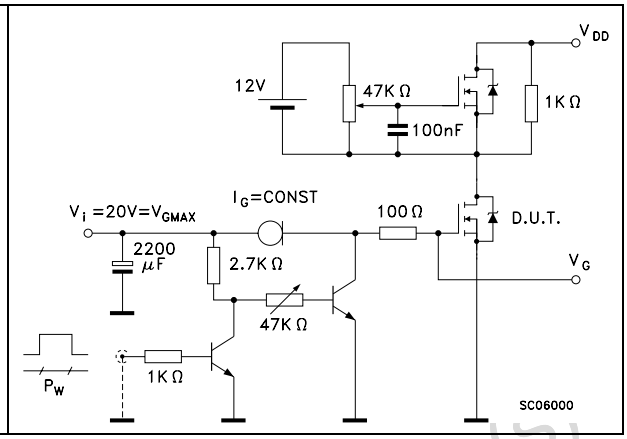

Figure 14. Test circuit for inductive load switching and diode recovery times

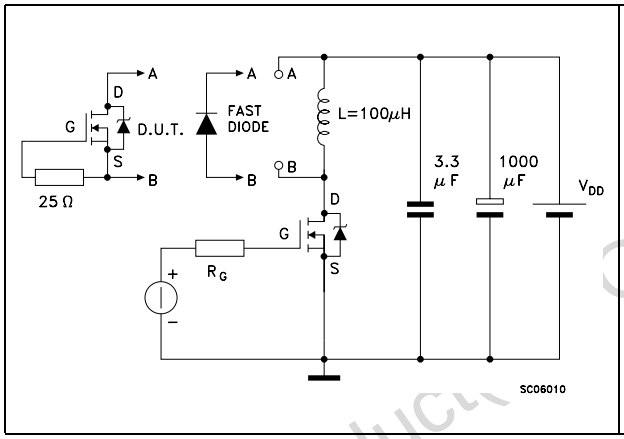

Figure 15. Unclamped Inductive load test circuit

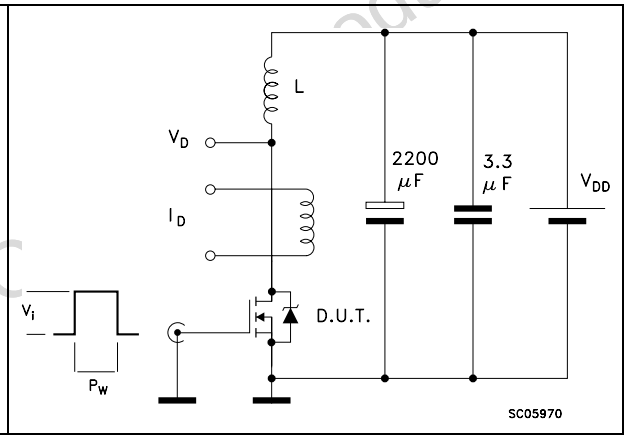

Figure 16. Unclamped inductive waveform

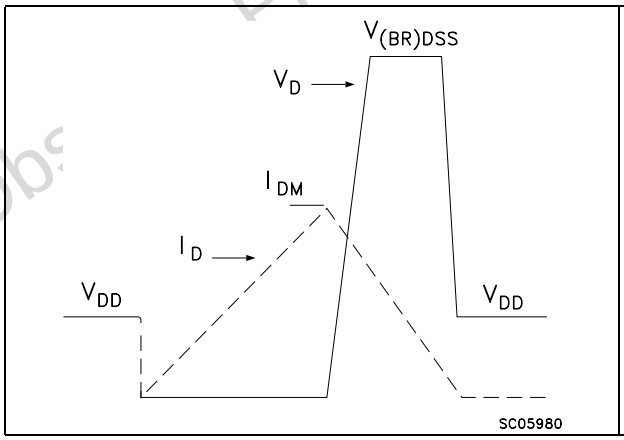

Figure 17. Switching time waveform

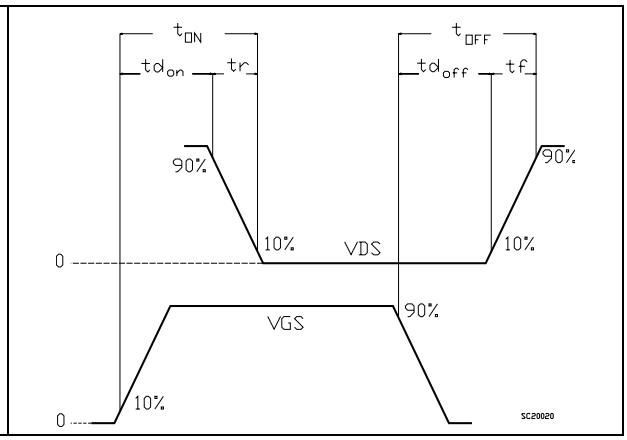

4 Package mechanical data

In order to meet environmental requirements, ST offers these devices in ECOPACK® packages. These packages have a Lead-free second level interconnect. The category of second level interconnect is marked on the package and on the inner box label, in compliance with JEDEC Standard JESD97. The maximum ratings related to soldering conditions are also marked on the inner box label. ECOPACK is an ST trademark. ECOPACK specifications are available at: *www.st.com*

Obsolete Product(s) - Obsolete Product(s)

SO-8 MECHANICAL DATA

DIM.	mm.			inch		
	MIN.	TYP	MAX.	MIN.	TYP.	MAX.
A			1.75			0.068
a1	0.1		0.25	0.003		0.009
a2			1.65			0.064
a3	0.65		0.85	0.025		0.033
b	0.35		0.48	0.013		0.018
b1	0.19		0.25	0.007		0.010
C	0.25		0.5	0.010		0.019
c1	45 (typ.)					
D	4.8		5.0	0.188		0.196
E	5.8		6.2	0.228		0.244
e		1.27			0.050	
e3		3.81			0.150	
F	3.8		4.0	0.14		0.157
L	0.4		1.27	0.015		0.050
M			0.6			0.023
S	8 (max.)					

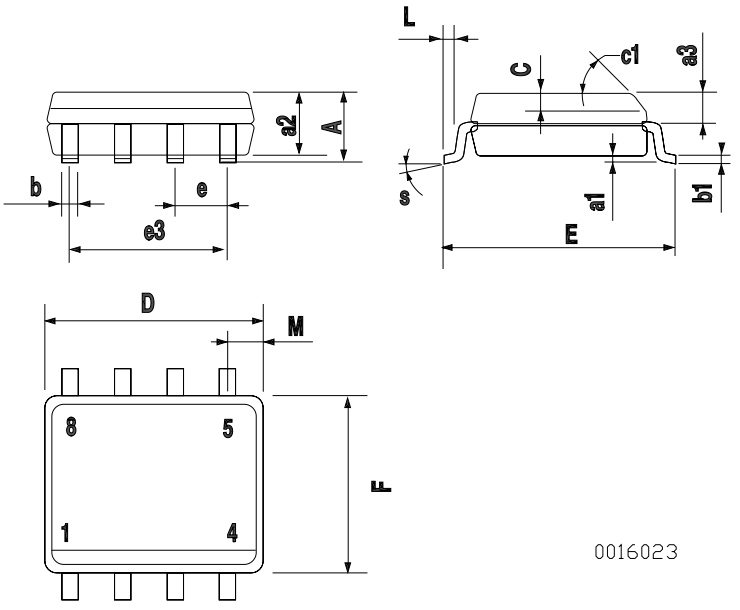

Obsole

5 Revision history

Table 8. Revision history

Date	Revision	Changes
17-May-2007	1	First release
02-Aug-2007	2	Marking has been updated

Obsolete Product(s) - Obsolete Product(s)

Please Read Carefully:

Information in this document is provided solely in connection with ST products. STMicroelectronics NV and its subsidiaries (“ST”) reserve the right to make changes, corrections, modifications or improvements, to this document, and the products and services described herein at any time, without notice.

All ST products are sold pursuant to ST’s terms and conditions of sale.

Purchasers are solely responsible for the choice, selection and use of the ST products and services described herein, and ST assumes no liability whatsoever relating to the choice, selection or use of the ST products and services described herein.

No license, express or implied, by estoppel or otherwise, to any intellectual property rights is granted under this document. If any part of this document refers to any third party products or services it shall not be deemed a license grant by ST for the use of such third party products or services, or any intellectual property contained therein or considered as a warranty covering the use in any manner whatsoever of such third party products or services or any intellectual property contained therein.

UNLESS OTHERWISE SET FORTH IN ST’S TERMS AND CONDITIONS OF SALE ST DISCLAIMS ANY EXPRESS OR IMPLIED WARRANTY WITH RESPECT TO THE USE AND/OR SALE OF ST PRODUCTS INCLUDING WITHOUT LIMITATION IMPLIED WARRANTIES OF MERCHANTABILITY, FITNESS FOR A PARTICULAR PURPOSE (AND THEIR EQUIVALENTS UNDER THE LAWS OF ANY JURISDICTION), OR INFRINGEMENT OF ANY PATENT, COPYRIGHT OR OTHER INTELLECTUAL PROPERTY RIGHT.

UNLESS EXPRESSLY APPROVED IN WRITING BY AN AUTHORIZED ST REPRESENTATIVE, ST PRODUCTS ARE NOT RECOMMENDED, AUTHORIZED OR WARRANTED FOR USE IN MILITARY, AIR CRAFT, SPACE, LIFE SAVING, OR LIFE SUSTAINING APPLICATIONS, NOR IN PRODUCTS OR SYSTEMS WHERE FAILURE OR MALFUNCTION MAY RESULT IN PERSONAL INJURY, DEATH, OR SEVERE PROPERTY OR ENVIRONMENTAL DAMAGE. ST PRODUCTS WHICH ARE NOT SPECIFIED AS "AUTOMOTIVE GRADE" MAY ONLY BE USED IN AUTOMOTIVE APPLICATIONS AT USER’S OWN RISK.

Resale of ST products with provisions different from the statements and/or technical features set forth in this document shall immediately void any warranty granted by ST for the ST product or service described herein and shall not create or extend in any manner whatsoever, any liability of ST.

ST and the ST logo are trademarks or registered trademarks of ST in various countries.

Information in this document supersedes and replaces all information previously supplied.

The ST logo is a registered trademark of STMicroelectronics. All other names are the property of their respective owners.

© 2007 STMicroelectronics - All rights reserved

STMicroelectronics group of companies

Australia - Belgium - Brazil - Canada - China - Czech Republic - Finland - France - Germany - Hong Kong - India - Israel - Italy - Japan - Malaysia - Malta - Morocco - Singapore - Spain - Sweden - Switzerland - United Kingdom - United States of America

www.st.com