ST13003, ST13003-K

High voltage fast-switching NPN power transistor

Datasheet - production data

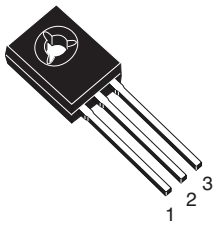

SOT-32

Figure 1. Internal schematic diagram

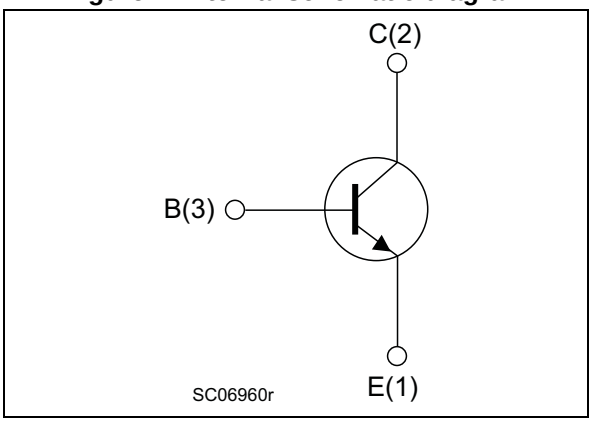

Features

- High voltage capability
- Low spread of dynamic parameters
- Very high switching speed

Applications

- Electronic ballast for fluorescent lighting (CFL)
- SMPS for battery charger

Description

The device is manufactured using high voltage multi-epitaxial planar technology for high switching speeds and high voltage capability.

It uses a cellular emitter structure with planar edge termination to enhance switching speeds while maintaining the wide RBSOA.

Table 1. Device summary

Part number	Marking	Package	Packaging
ST13003	13003	SOT-32	Tube
ST13003-K	13003	SOT-32	Bag

This is information on a product in full production. www.st.com

1 Electrical ratings

Table 2. Absolute maximum ratings

Symbol	Parameter	Value	Unit
V_{CES}	Collector-emitter voltage (V_{BE} = 0)	700	V
V_{CEO}	Collector-emitter voltage (I_B = 0)	400	V
V_{EBO}	Emitter-base voltage (I_C = 0, I_B = 0.75 A, t_P < 10 μs)	$V_{(BR)EBO}$	V
I_C	Collector current	1.5	A
I_{CM}	Collector peak current (t_P < 5 ms)	3	A
I_B	Base current	0.75	A
I_{BM}	Base peak current (t_P < 5 ms)	1.5	A
P_{TOT}	Total dissipation at T_C = 25 °C	40	W
T_{STG}	Storage temperature	-55 to 150	°C
T_J	Operating junction temperature	-40 to 150	°C

Table 3. Thermal data

Symbol	Parameter	Value	Unit
R_{thJC}	Thermal resistance junction-case max.	3.1	°C/W

2 Electrical characteristics

T_{case} = 25 °C unless otherwise specified.

Table 4. Electrical characteristics

Symbol	Parameter	Test conditions	Min.	Typ.	Max.	Unit
I_{CES}	Collector cut-off current (V_{BE} = 0)	V_{CE} = 700 V V_{CE} = 700 V T_C = 125 °C			1 5	mA mA
$V_{(BR)EBO}$	Emitter-Base breakdown voltage (I_C = 0)	I_E = 10 mA	9		18	V
$V_{CEO(sus)}$ (1)	Collector-emitter sustaining voltage (I_B = 0)	I_C = 10 mA	400			V
$V_{CE(sat)}$ (1)	Collector-emitter saturation voltage	I_C = 0.5 A I_B = 0.1 A I_C = 1 A I_B = 0.25 A I_C = 1.5 A I_B = 0.5 A			0.5 1 1.5	V V V
$V_{BE(sat)}$ (1)	Base-emitter saturation voltage	I_C = 0.5 A I_B = 0.1 A I_C = 1 A I_B = 0.25 A			1 1.2	V V
h_{FE}	DC current gain	I_C = 0.5 A V_{CE} = 2 V I_C = 1 A V_{CE} = 2 V	8 5		20 25	
t_r t_s t_f	Resistive load Rise time Storage time Fall time	V_{CC} = 125 V I_C = 1 A I_{B1} = 0.2 A I_{B2} = - 0.2 A t_p = 25 μs			1 4 0.7	μs μs μs
t_s	Inductive load Storage time	I_C = 1 A I_{B1} = 0.2 A V_{BE} = - 5 V L = 50 mH V_{Clamp} = 300 V		0.8		μs

1. Pulsed duration = 300 μs, duty cycle ≤ 1.5%

2.1 Electrical characteristics (curves)

Figure 2. Safe operating areas

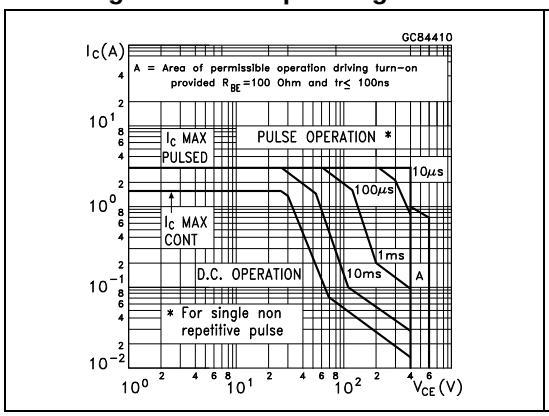

Figure 3. Derating curve

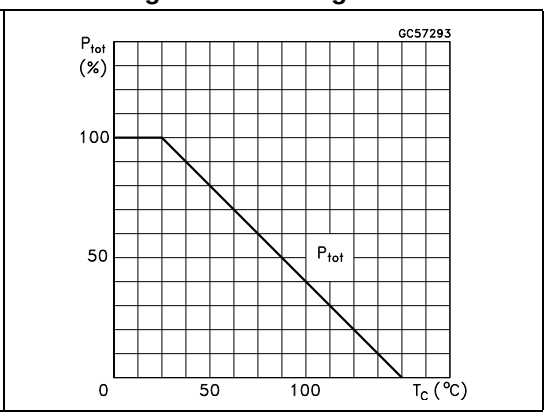

Figure 4. Output characteristics

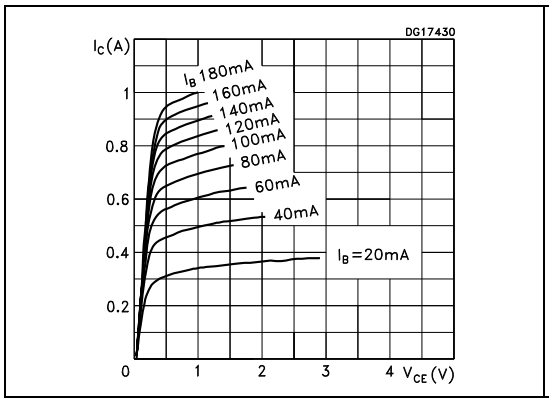

Figure 5. Reverse biased safe operating areas

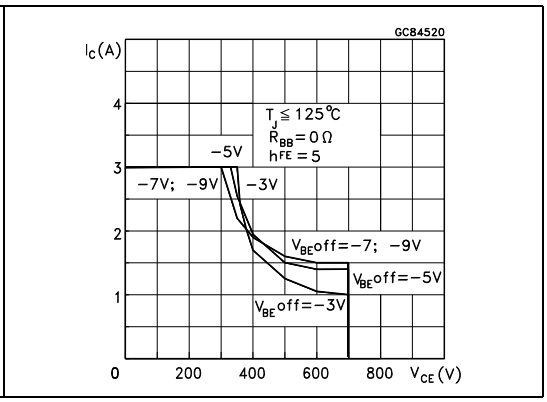

Figure 6. DC current gain (V_{CE} = 1 V)

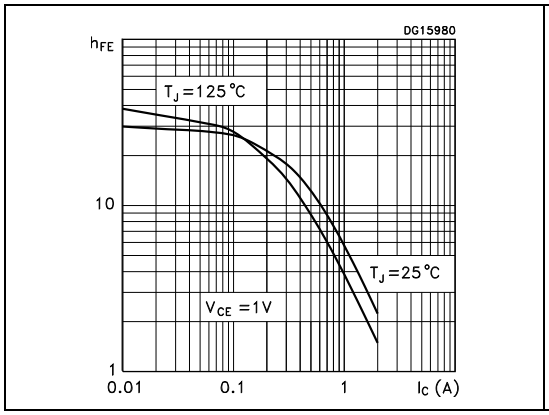

Figure 7. DC current gain (V_{CE} = 5 V)

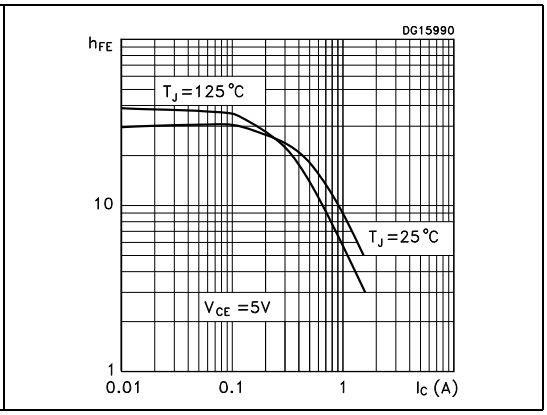

Figure 8. Collector-emitter saturation voltage

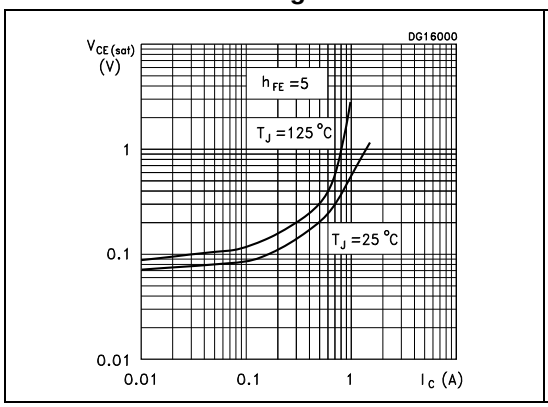

Figure 9. Base-emitter saturation voltage

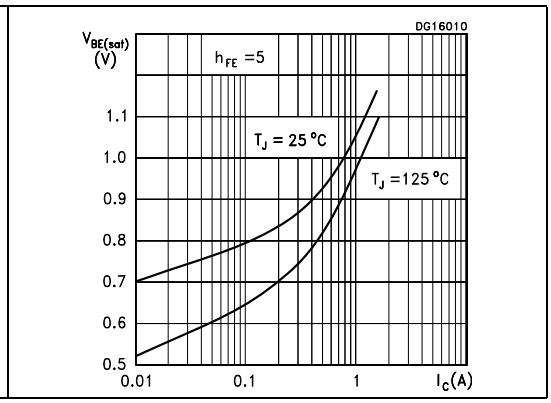

Figure 10. Inductive load switching time

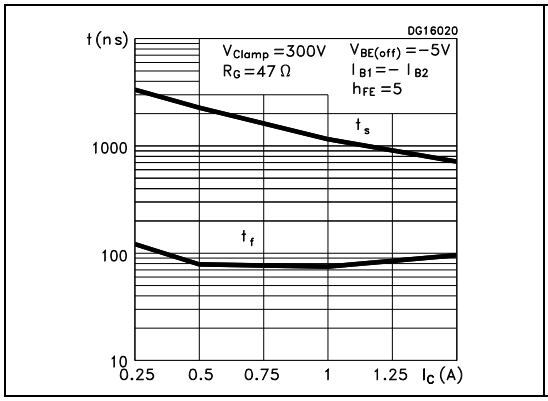

Figure 11. Resistive load switching time

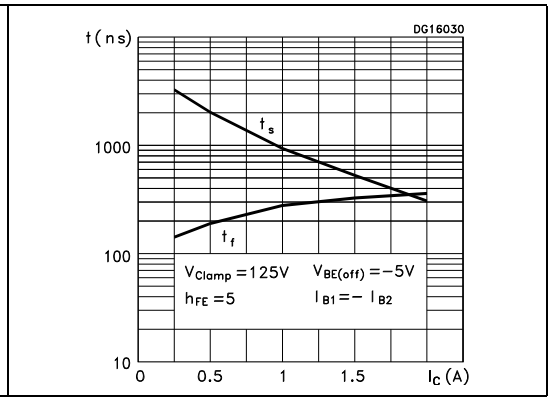

2.2 Test circuits

Figure 12. Resistive load switching test circuit

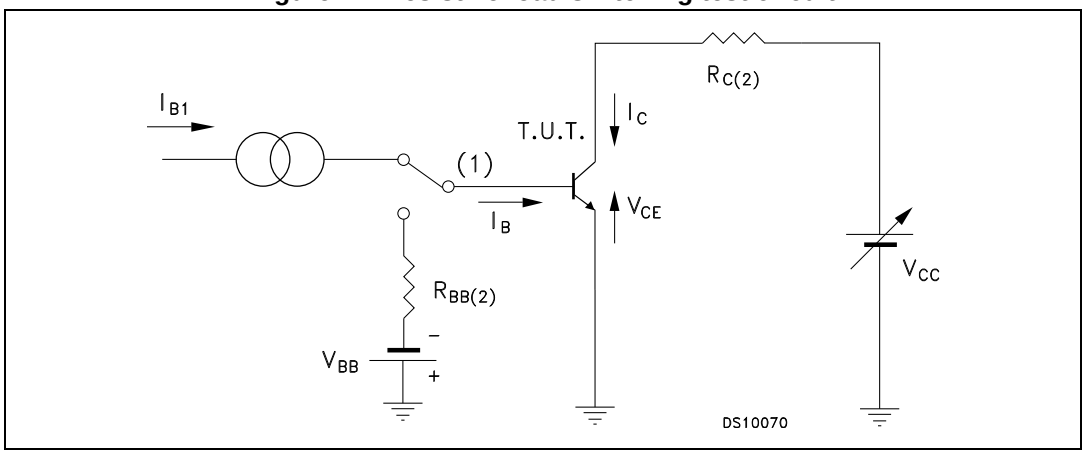

1. Fast electronic switch
2. Non-inductive resistor

Figure 13. Inductive load switching test circuit

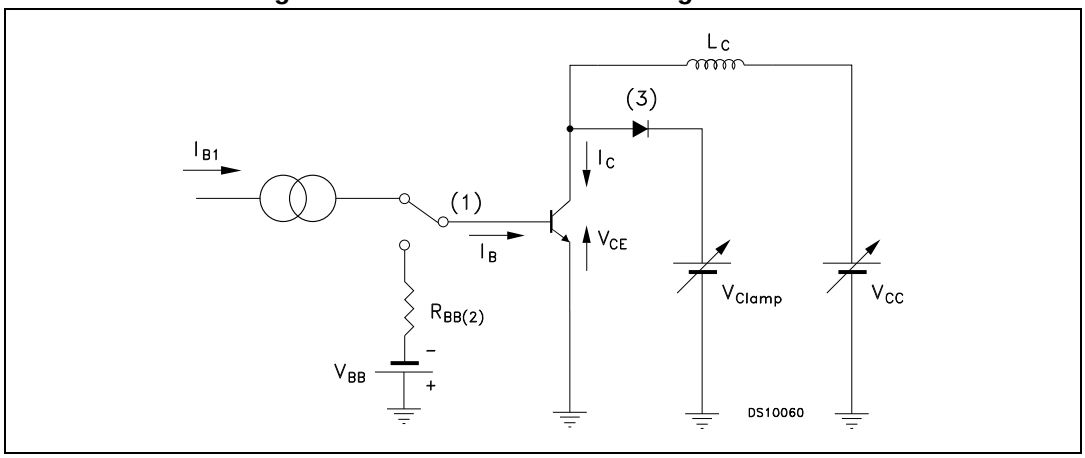

1. Fast electronic switch
2. Non-inductive resistor
3. Fast recovery rectifier

3 Package mechanical data

In order to meet environmental requirements, ST offers these devices in different grades of ECOPACK® packages, depending on their level of environmental compliance. ECOPACK® specifications, grade definitions and product status are available at: *www.st.com*.
ECOPACK® is an ST trademark.

Table 5. SOT-32 (TO-126) mechanical data

Dim.	mm.		
	Min.	Typ.	Max.
A	2.4		2.9
B	0.64		0.88
B1	0.39		0.63
D	10.5		11.05
E	7.4		7.8
e	2.04	2.29	2.54
e1	4.07	4.58	5.08
L	15.3		16
P	2.9		3.2
Q		3.8	
Q1	1		1.52
H2		2.15	
I		1.27	

Figure 14. SOT-32 (TO-126) drawings

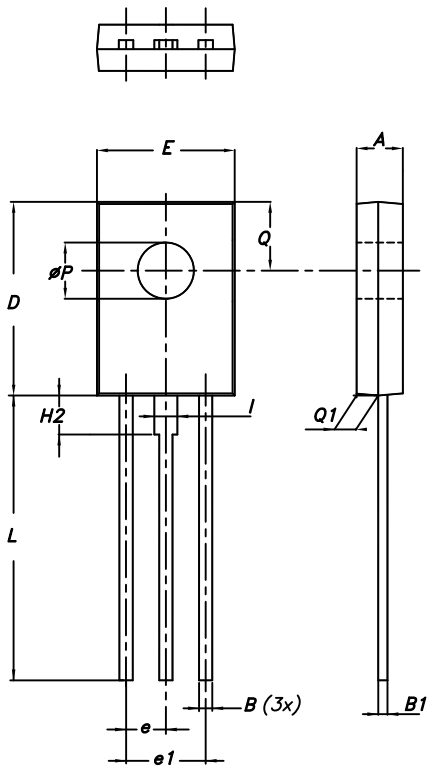

4 Revision history

Table 6. Document revision history

Date	Revision	Changes
23-May-2007	1	Initial release.
09-Jul-2008	2	Added *Table 1 on page 1*.
15-Dec-2009	3	Added *Table 3: Thermal data on page 2*.
15-Jun-2011	4	Modified: *Table 2*
18-Jun-2013	5	Added device ST13003.

Please Read Carefully:

Information in this document is provided solely in connection with ST products. STMicroelectronics NV and its subsidiaries (“ST”) reserve the right to make changes, corrections, modifications or improvements, to this document, and the products and services described herein at any time, without notice.

All ST products are sold pursuant to ST’s terms and conditions of sale.

Purchasers are solely responsible for the choice, selection and use of the ST products and services described herein, and ST assumes no liability whatsoever relating to the choice, selection or use of the ST products and services described herein.

No license, express or implied, by estoppel or otherwise, to any intellectual property rights is granted under this document. If any part of this document refers to any third party products or services it shall not be deemed a license grant by ST for the use of such third party products or services, or any intellectual property contained therein or considered as a warranty covering the use in any manner whatsoever of such third party products or services or any intellectual property contained therein.

UNLESS OTHERWISE SET FORTH IN ST’S TERMS AND CONDITIONS OF SALE ST DISCLAIMS ANY EXPRESS OR IMPLIED WARRANTY WITH RESPECT TO THE USE AND/OR SALE OF ST PRODUCTS INCLUDING WITHOUT LIMITATION IMPLIED WARRANTIES OF MERCHANTABILITY, FITNESS FOR A PARTICULAR PURPOSE (AND THEIR EQUIVALENTS UNDER THE LAWS OF ANY JURISDICTION), OR INFRINGEMENT OF ANY PATENT, COPYRIGHT OR OTHER INTELLECTUAL PROPERTY RIGHT.

ST PRODUCTS ARE NOT AUTHORIZED FOR USE IN WEAPONS. NOR ARE ST PRODUCTS DESIGNED OR AUTHORIZED FOR USE IN: (A) SAFETY CRITICAL APPLICATIONS SUCH AS LIFE SUPPORTING, ACTIVE IMPLANTED DEVICES OR SYSTEMS WITH PRODUCT FUNCTIONAL SAFETY REQUIREMENTS; (B) AERONAUTIC APPLICATIONS; (C) AUTOMOTIVE APPLICATIONS OR ENVIRONMENTS, AND/OR (D) AEROSPACE APPLICATIONS OR ENVIRONMENTS. WHERE ST PRODUCTS ARE NOT DESIGNED FOR SUCH USE, THE PURCHASER SHALL USE PRODUCTS AT PURCHASER’S SOLE RISK, EVEN IF ST HAS BEEN INFORMED IN WRITING OF SUCH USAGE, UNLESS A PRODUCT IS EXPRESSLY DESIGNATED BY ST AS BEING INTENDED FOR “AUTOMOTIVE, AUTOMOTIVE SAFETY OR MEDICAL” INDUSTRY DOMAINS ACCORDING TO ST PRODUCT DESIGN SPECIFICATIONS. PRODUCTS FORMALLY ESCC, QML OR JAN QUALIFIED ARE DEEMED SUITABLE FOR USE IN AEROSPACE BY THE CORRESPONDING GOVERNMENTAL AGENCY.

Resale of ST products with provisions different from the statements and/or technical features set forth in this document shall immediately void any warranty granted by ST for the ST product or service described herein and shall not create or extend in any manner whatsoever, any liability of ST.

ST and the ST logo are trademarks or registered trademarks of ST in various countries.
Information in this document supersedes and replaces all information previously supplied.
The ST logo is a registered trademark of STMicroelectronics. All other names are the property of their respective owners.

© 2013 STMicroelectronics - All rights reserved

STMicroelectronics group of companies

Australia - Belgium - Brazil - Canada - China - Czech Republic - Finland - France - Germany - Hong Kong - India - Israel - Italy - Japan - Malaysia - Malta - Morocco - Philippines - Singapore - Spain - Sweden - Switzerland - United Kingdom - United States of America

www.st.com