STHS2375A, STHS2375L, STHS2376A, STHS2376L, STHS2377A, STHS2377L

IEEE 802.3af PoE Powered Device (PD) interface controller

Features

- IEEE 802.3af-compliant interface for Powered Devices (PDs)
- Integrated 100V, 500mA power MOSFET
- Resistor-programmable inrush current limit
- Normal operation current limit 460mA
- External 25kΩ signature resistor
- Resistor-programmable classification current (Class 0-4)
- Power Good output (active-high), open drain
- Undervoltage Lockout (UVLO) - standard, programmable, and legacy (see *Table 1*)
- Thermal overload protection
- Latch (L) or auto-retry (A) after hard current overload or repetitive thermal overload
- Industrial temperature range: –40 to +85°C
- 8-pin SO and 8-pin TSSOP packages
- RoHS compliant



SO8 (M)



TSSOP8 (DW)

Applications

- Voice over IP (VOIP) phones
- Web cameras
- WLAN access points
- Internet appliances
- POS terminals
- RFID readers

Table 1. Device options

Order code	External signature resistor (1%)	UVLO	UVLO threshold, rising (V)	UVLO threshold, falling (V)	Protection mode
STHS2375A	24.9kΩ	Standard	39.3	30.5	Auto
STHS2375L	24.9kΩ	Standard	39.3	30.5	Latch
STHS2376A	24.9kΩ	Programmable	2.49	1.93	Auto
STHS2376L	24.9kΩ	Programmable	2.49	1.93	Latch
STHS2377A	24.9kΩ	Legacy	35.1	30.5	Auto
STHS2377L	24.9kΩ	Legacy	35.1	30.5	Latch

Obsolete Product(s) - Obsolete Product(s)

Contents

1 **Summary description** 5
1.1 Pin descriptions 7
1.1.1 Current limit (I_{LIM}) 7
1.1.2 Classification (CLASS) 7
1.1.3 Detection resistor (DET) 7
1.1.4 Ground (V_{SS}) 7
1.1.5 Return (RTN) 7
1.1.6 Power Good output (PG) 7
1.1.7 Undervoltage Lockout Input (UVLO, STHS2376A/L only) 7
1.1.8 Power supply (V_{DD}) 7
2 **Absolute maximum ratings STHS237xA, STHS237xL** 11
3 **Electrical parameters STHS237xA, STHS237xL** 12
4 **Package mechanical data** 15
5 **Part numbering** 18
6 **Revision history** 19

Obsolete Product(s) - Obsolete Product(s)

List of figures

Figure 1. Logic diagram . . . 6
Figure 2. STHS2375A/L, STHS2377A/L pin connections (top view) . . . 6
Figure 3. STHS2376A/L pin connections (top view) . . . 6
Figure 4. Application circuit overview (STHS2375A/L, STHS2377A/L) . . . 8
Figure 5. STHS237xA block diagram . . . 9
Figure 6. STHS237xL block diagram . . . 10
Figure 7. SO8 – 8-lead plastic small outline, 150 mils width, package outline . . . 16
Figure 8. TSSOP8 – 8-lead, thin shrink small outline, 3x4.4mm, package outline . . . 17

Obsolete Product(s) - Obsolete Product(s)

List of tables

Table 1. Device options . . . 1
Table 2. Signal names . . . 6
Table 3. IEEE802.3af PD power classes and corresponding R_{CLASS} values . . . 8
Table 4. Absolute maximum ratings . . . 11
Table 5. Electrical parameters . . . 12
Table 6. DC characteristics . . . 13
Table 7. SO8 – 8-lead plastic small outline, 150 mils width, package mechanical data . . . 16
Table 8. TSSOP8 – 8-lead, thin shrink small outline, 3x4.4mm, package mechanical data . . . 17
Table 9. Ordering information scheme . . . 18
Table 10. Document revision history . . . 19

Obsolete Product(s) - Obsolete Product(s)

1 Summary description

The STHS237x is an IEEE802.3af-compliant family of interface controllers for Power over Ethernet (PoE) Powered Device (PD) applications. The devices consist of two main sections:

- The IEEE802.3af interface to the PoE powered RJ-45 wall socket, and
- the Hot Swap Controller (HSC) functions required to protect the PD during insertion, operation, and withdrawal from the RJ-45 socket.

These devices have an integrated high voltage power MOSFET (low-side switch) with low $R_{DS\ ON}$ and the capability to accept transients as high as 100V. Since the pins (such as V_{DD} and V_{SS}) which interface to the RJ-45 socket can routinely see high peak voltages in excess of 100V, it is strongly recommended that board designers protect the PD device with a transient voltage suppressor, such as the SMAJ58A (available from STMicroelectronics), connected between the V_{DD} and V_{SS} pins (see *Figure 4 on page 8*).

The IEEE802.3af-compliant interface includes the basic PD Detection and Classification functions, whereas the 'Hot Swap' functions include other basic features, such as Inrush Current Limiting, Undervoltage Lockout (UVLO), and Thermal Overload Protection. All of the devices include an open drain Power Good (PG) signal to indicate normal steady operation (see *Figure 1 on page 6* and *Table 2 on page 6*). The STHS237x family also incorporates a voltage offset (two series diodes) to accommodate the input diode bridge used to make the PD polarity insensitive.

The STHS237x family comprises devices for all the UVLO limits configurations: IEEE standard compliant (STHS2375), programmable (STHS2376) and for legacy systems (STHS2377). See *Table 1 on page 1*.

Each of the basic part types, the STHS2375, STHS2376 and the STHS2377, is available either with Latched Operation (L) Mode or with Automatic Retry (A) Mode after fault conditions. For product options overview see *Table 1 on page 1*.

Obsolete Product(s) - Obsolete Product(s)

Figure 1. Logic diagram

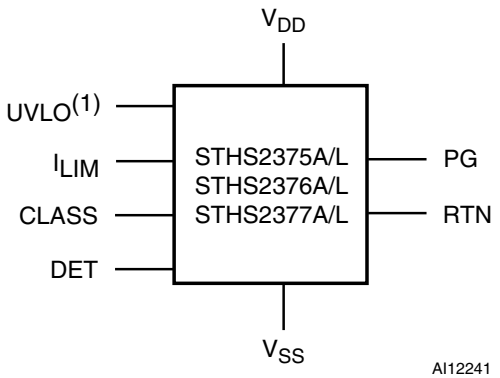

1. STHS2376A/L devices only.

Table 2. Signal names

Pin	Symbol	Description
1	I_{LIM}	Inrush Current Limit resistor
2	CLASS	Classification resistor
3	DET	Powered Device Detection resistor
4	V_{SS}	Ground on the input side; return power line to PSE
5	RTN	Return power output, negative rail
6	PG	Power Good Output, open drain, active-high (referenced to RTN)
7	UVLO (1)	Programmable Undervoltage Lockout input pin
8	V_{DD}	Positive Power Supply; common input/output power rail

1. STHS2376A/L devices only, for other part types No Connect.

Figure 2. STHS2375A/L, STHS2377A/L pin connections (top view)

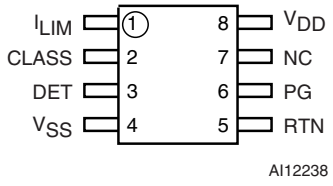

Figure 3. STHS2376A/L pin connections (top view)

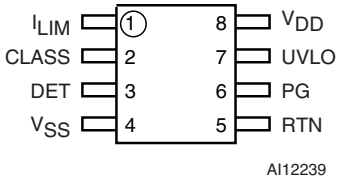

Obsolete Product(s) - Obsolete Product(s)

1.1 Pin descriptions

1.1.1 Current limit (I_{LIM})

Connect a resistor between I_{LIM} and V_{SS} to set the start-up inrush current limit.
I_{LIM} = 25 000/R_{ILIM} [A]. Practical values of R_{ILIM} are between 62.5kΩ and 500kΩ.
R_{ILIM} = 178kΩ for inrush current of 140mA for compatibility with legacy PSEs. Do not leave open or connect to V_{SS}.

1.1.2 Classification (CLASS)

Connect a Classification resistor between this pin and V_{SS} to tell the PSE which power class will be connected. Do not connect this pin directly to V_{SS}.

For classification resistor values, see *Table 3 on page 8*.

1.1.3 Detection resistor (DET)

Connect a 24.9kΩ resistor between DET and V_{DD} to allow the PSE to detect the Powered Device properly.

1.1.4 Ground (V_{SS})

This is the return power line on the PSE side (negative).

1.1.5 Return (RTN)

This is the return power output on the load side, negative rail.

1.1.6 Power Good output (PG)

This pin indicates that the STHS power MOSFET is fully on and works in normal operation mode (Power Good). Open drain, high impedance means that the power is good; in all other cases, the impedance is low (referenced to RTN).

1.1.7 Undervoltage Lockout Input (UVLO, STHS2376A/L only)

Connect the tap of the resistor divider between V_{DD} and V_{SS} to set the UVLO voltage limits (see *Figure 6 on page 10*).

Note: STHS2376A/L only, for all other devices, this is No Connect.

1.1.8 Power supply (V_{DD})

This is the Power Input/Output, positive rail.

Obsolete Product(s) Obsolete Product(s)

Table 3. IEEE802.3af PD power classes and corresponding R_{CLASS} values

Class	Usage	Max. Power at Input of PD (W)	Classification Load Current Limits (mA)	R_{CLASS} Resistor (Ω, 1%)
0	Default	0.44 to 12.95	0-4	4420
1	Optional	0.44 to 3.84	9-12	953
2	Optional	3.84 to 6.49	17-20	549
3	Optional	6.49 to 12.95	26-30	357
4	Reserved	Reserved(1)	36-44	255

1. Class 4 is currently reserved and should not be used.

Figure 4. Application circuit overview (STHS2375A/L, STHS2377A/L)

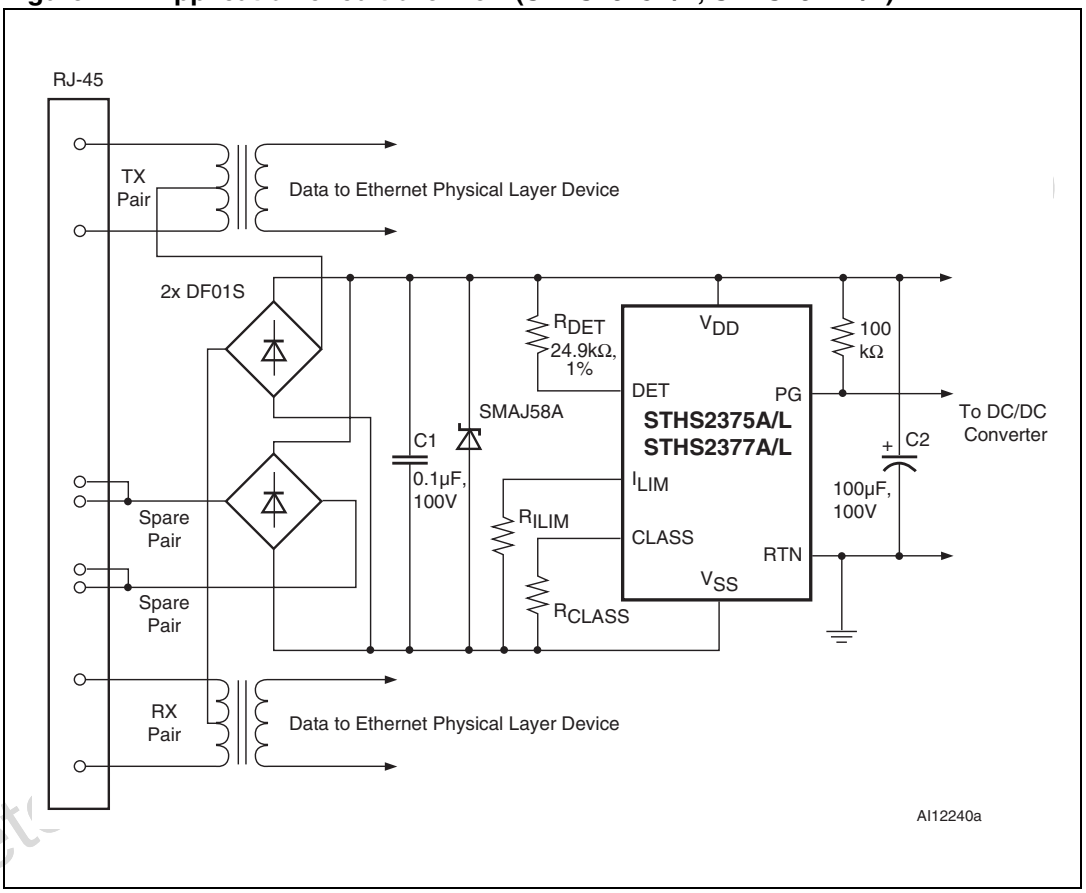

Note: This configuration uses either data wires or spare wires for DC power.

Obsolete

Figure 5. STHS237xA block diagram

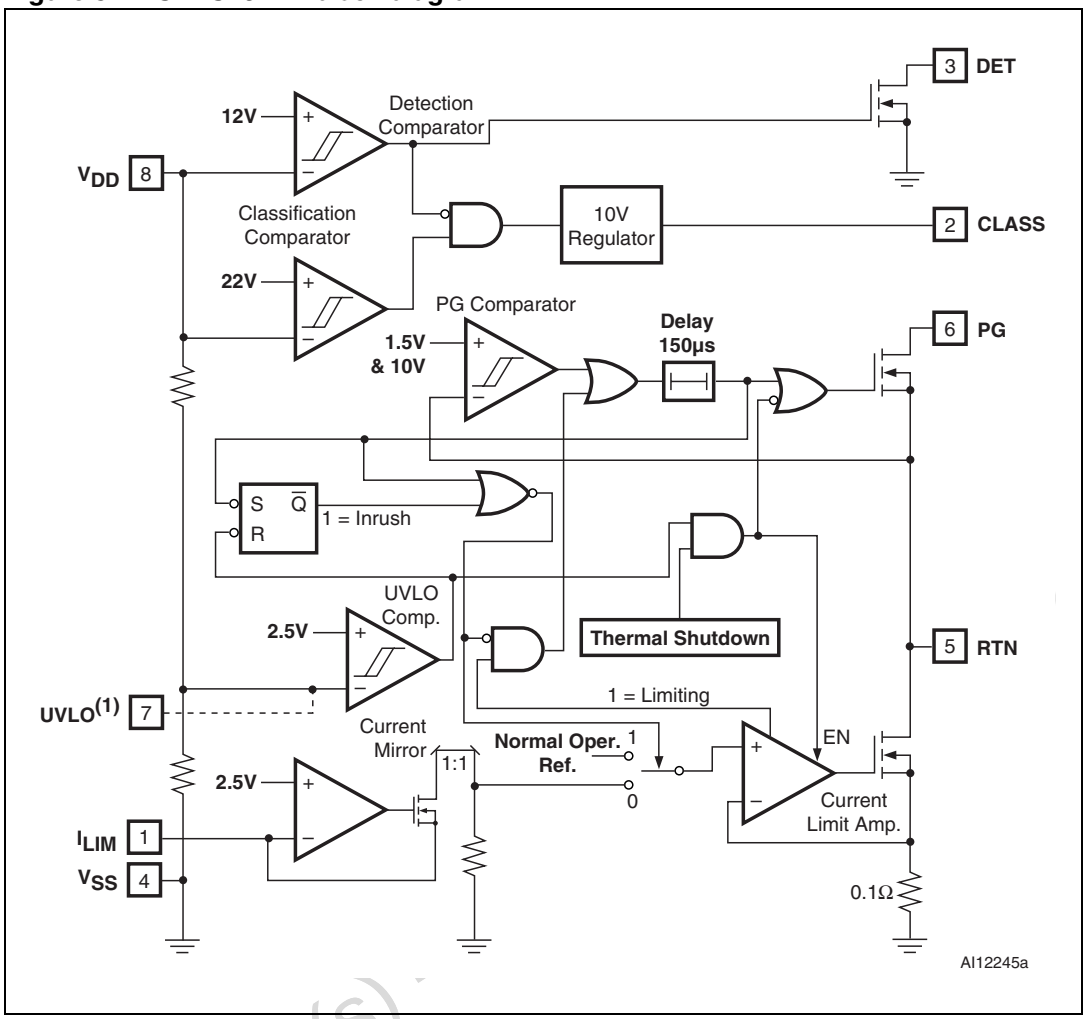

1. STHS2376A/L devices only. The UVLO comparator is connected directly to the UVLO input pin instead of the internal UVLO divider. For all other devices, pin 7 is NC (No Connect).

Obsolete Product(s)

Figure 6. STHS237xL block diagram

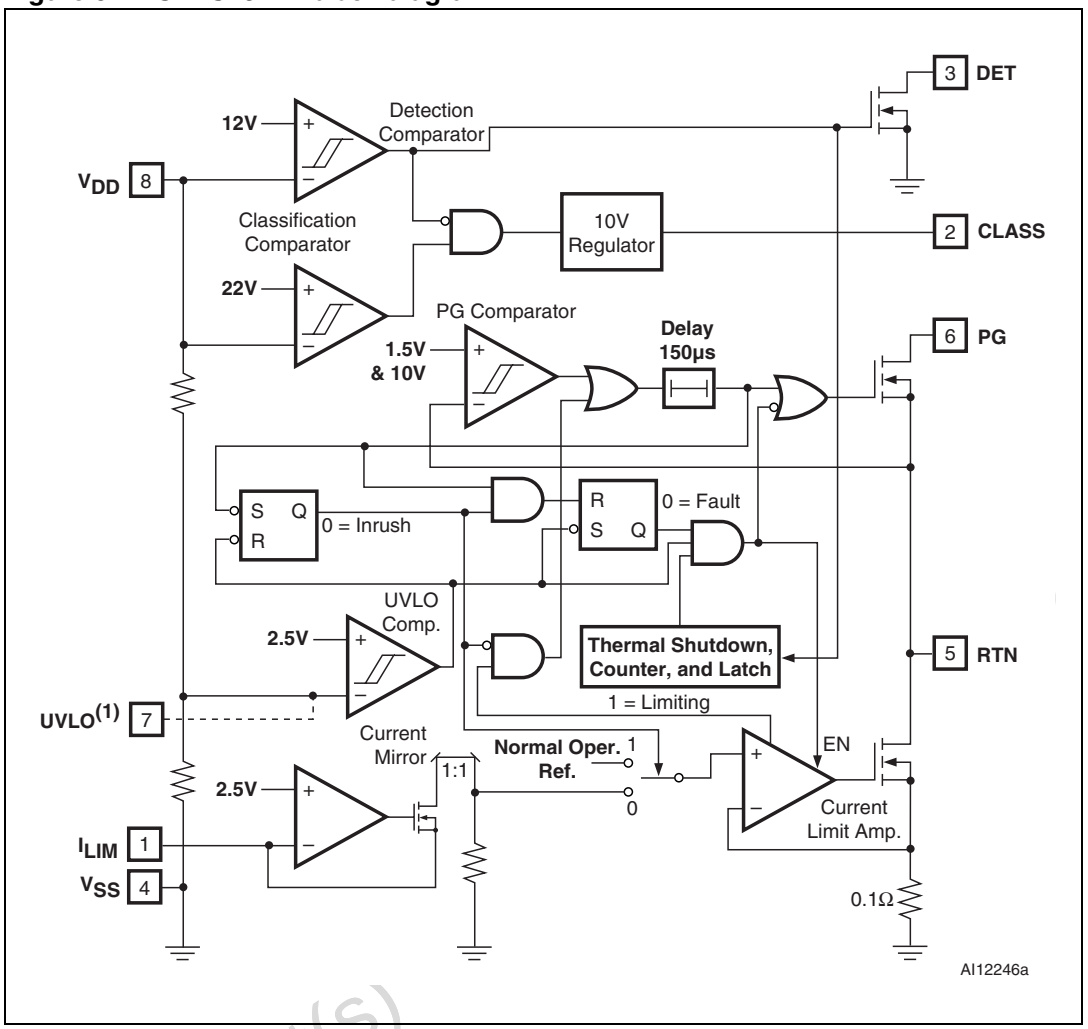

1. STHS2376A/L devices only. The UVLO comparator is connected directly to the UVLO input pin instead of the internal UVLO divider. For all other devices, pin 7 is NC (No Connect).

Obsolete Product(s)

2 Absolute maximum ratings STHS237xA, STHS237xL

Stressing the device above the rating listed in *Table 4: Absolute maximum ratings* may cause permanent damage to the device. These are stress ratings only and operation of the device at these or any other conditions above those indicated in the Operating sections of this specification is not implied. Exposure to absolute maximum rating conditions for extended periods may affect device reliability. Refer also to the STMicroelectronics SURE Program and other relevant quality documents.

Over the full operating temperature range, unless otherwise noted. Voltages are referenced to the V_{SS} pin.

Table 4. Absolute maximum ratings

Symbol	Parameter	Value	Unit
Voltage			
V_{VDD}, V_{RTN}	Voltage on the respective pins, referenced to V_{SS} pin	–0.3 to 100	V
V_{DET}, V_{PG} (1)		–0.3 to 90	V
V_{UVLO}		–0.3 to10	V
V_{ILIM} (2)		–0.3 to 3	V
V_{CLASS} (2)		–0.3 to 12	V
Current, sinking			
I_{RTN}	Current sunk by the respective pins	0 to 515	mA
I_{PG}		0 to 10	mA
I_{DET}		0 to 1	mA
Current, sourcing			
I_{CLASS}	Current sourced by the respective pins	0 to 100	mA
I_{ILIM}		0 to 1	mA
ESD			
V_{HBM}	ESD Capability, Human body model	2	kV
V_{CDM}	ESD Capability, Charged device model	500	V
Temperature			
T_A	Operating ambient temperature range	–40 to 85	°C
T_J	Maximum junction temperature	Internally limited	°C
T_{STG}	Storage temperature	–55 to 150	°C
T_{SLD}	Lead solder temperature for 10 seconds, lead-free lead finish (3)	260	°C

1. I_{RTN} = 0
2. Voltage output, do not apply external voltage to the CLASS and I_{LIM} pins.
3. Reflow at peak temperature of 260°C (total thermal budget not to exceed 245°C for more than 30 seconds).

Obsolete Product(s) - Obsolete Product(s)

3 Electrical parameters STHS237xA, STHS237xL

Specifications common for all the STHS237xA/L product family unless otherwise noted.

V_{DD} = 48V, R_{DET} = 24.9kΩ, R_{CLASS} = 255Ω, R_{ILIM} = 178kΩ, T_J= –40 to 125°C, unless otherwise noted, typical values at 25°C. For the STHS2376x V_{UVLO} = 0V for classification and V_{UVLO} = 5V otherwise. Voltages are referenced to the V_{SS} pin unless otherwise noted. Positive currents are into pins.

Table 5. Electrical parameters

Symbol	Parameter	Test conditions	Min	Typ	Max	Units
Recommended operating conditions						
	Input voltage range	V_{DD}, PG, RTN	0		57	V
		UVLO	0		5	V
I_{RTN}	Operating current range (sinking)	RTN	0		450	mA
R_{CLASS}	Classification resistor (1), (2)	CLASS	255		4420	Ω
R_{ILIM}	Inrush current limit programming resistor (2)		62.5		500	kΩ
$I_{PG(SINK)}$	Sinking current	PG = low	0		10	mA
T_J	Operating junction temperature		–40		125	°C
T_A	Operating free-air temperature		–40		85	°C

1. Classification tested with exact resistor values. A 1% tolerance of classification resistor values is sufficient for compliance with IEEE 802.3af classification current limits.
2. Do not apply external voltage to the CLASS and I_{LIM} pins.

Obsolete Product(s) - Obsolete Product(s)

Table 6. DC characteristics

Symbol	Parameter	Test conditions		Min	Typ	Max	Unit
Detection							
	Offset current	DET open, $V_{VDD} = V_{RTN}$ = 1.9V, measure $I_{VDD} + I_{RTN}$			0.3	3	µA
	Sleep current	DET open, $V_{VDD} = V_{RTN}$ = 10.1V, measure $I_{VDD} + I_{RTN}$			4	12	µA
$I_{IL(DET)}$	DET pin leakage current	$V_{DET} = V_{VDD}$ = 57V, measure I_{DET}			0.1	5	µA
I_{DET}	Detection current	$V_{RTN} = V_{VDD}$, R_{DET} = 24.9kΩ, measure $I_{VDD} + I_{RTN} + I_{DET}$	V_{VDD} = 1.4V	53.7	56	58.3	µA
			V_{VDD} = 10.1V	395	410	417	µA
Classification							
I_{CLASS}	Classification current(1)	R_{CLASS} = 4420Ω, V_{VDD} = 13 to 21V		2.2	2.4	2.8	mA
		R_{CLASS} = 953Ω, V_{VDD} = 13 to 21V		10.3	10.6	11.3	mA
		R_{CLASS} = 549Ω, V_{VDD} = 13 to 21V		17.7	18.3	19.5	mA
		R_{CLASS} = 357Ω, V_{VDD} = 13 to 21V		27.1	28.0	29.5	mA
		R_{CLASS} = 255Ω, V_{VDD} = 13 to 21V		38.0	39.4	41.2	mA
$V_{CL(ON)}$	Classification lower threshold	Regulator turns on, V_{VDD} rising		10.2	11.3	13.0	V
$V_{CU(OFF)}$	Classification upper threshold	Regulator turns off, V_{VDD} rising		21	21.9	23	V
$V_{CU(H)}$		Hysteresis		0.5	0.78	1	V
$I_{IL(CLASS)}$	CLASS pin leakage current	V_{CLASS} = 0V, V_{VDD} = 57V				1	µA
Pass device							
$R_{DS(ON)}$	On resistance	I_{RTN} = 300mA			0.72	1.0	Ω
$I_{RTN(L)}$	RTN pin leakage current	$V_{VDD} = V_{RTN}$ = 30V (V_{UVLO} = 0V for STHS2376x)				15	µA
$I_{LIM(N)}$	Normal operation current limit	V_{RTN} = 1V		405	461	515	mA
$I_{LIM(I)}$	Inrush mode current limit	V_{RTN} = 2V, R_{ILIM} = 178kΩ		100	130	180	mA
	Inrush current termination(2)	V_{RTN} falling, R_{ILIM} = 178kΩ, inrush mode to normal operation mode		85	91	100	%
	Current rise time to inrush(3)	R_{ILIM} = 69.8kΩ, $V_{RTN-VSS}$ = 5V, I_{RTN} = 30 → 300mA, V_{VDD} increasing past upper UVLO		15	34		µs
$I_{IL(ILIM)}$	ILIM pin leakage current	V_{VDD} = 15V, V_{UVLO} = 0V				1	µA
Power Good (PG)							
$V_{RTN(LO R)}$	RTN latch off voltage, rising(4)	V_{RTN} rising		9.5	10.0	10.5	V

Obsolete Product(s) - Obsolete Product(s)

Table 6. DC characteristics (continued)

Symbol	Parameter	Test conditions	Min	Typ	Max	Unit
	PG deglitch	Delay rising and falling PG	75	150	225	µs
$V_{PG(OL)}$	Output low voltage	I_{PG} = 2mA, V_{RTN} = 34V, V_{VDD} = 38V, V_{RTN} falling		0.12	0.4	V
		I_{PG} = 2mA, V_{RTN} = 0V, V_{VDD} = 25V, for STHS2376x V_{UVLO} = 0V		0.12	0.4	V
$I_{OL(PG)}$	PG pin leakage current	V_{VDD} = V_{PG} = 57V, V_{RTN} = 0V		0.1	1	µA
Undervoltage lockout (UVLO)						
$V_{UVLO(R)}$	UVLO Thresholds, STHS2375x	Voltage at V_{DD} pin, V_{VDD} rising	38.4	39.3	40.4	V
$V_{UVLO(F)}$		Voltage at V_{DD} pin, V_{VDD} falling	29.6	30.5	31.5	V
$V_{UVLO(H)}$		Hysteresis	8.3	8.8	9.1	V
$V_{UVL(R)}$	UVLO Thresholds, STHS2376x	Voltage at UVLO pin, V_{UVLO} rising	2.43	2.49	2.57	V
$V_{UVLO(F)}$		Voltage at UVLO pin, V_{UVLO} falling	1.87	1.93	1.98	V
$V_{UVLO(H)}$		Hysteresis	0.53	0.56	0.58	V
$V_{UVLO(R)}$	UVLO Thresholds, STHS2377x	Voltage at V_{DD} pin, V_{VDD} rising	34.1	35.1	36.0	V
$V_{UVLO(F)}$		Voltage at V_{DD} pin, V_{VDD} falling	29.7	30.5	31.4	V
$V_{UVLO(H)}$		Hysteresis	4.3	4.5	4.8	V
$I_{IL(UVLO)}$	UVLO pin leakage current (STHS2376x only)	V_{UVLO} = 0 to 5V	–1		1	µA
Thermal shutdown						
$T_{SHUTDOWN}$	Shutdown temperature(3), temperature rising			140		°C
$T_{SHUTDOWN\ H}$	Hysteresis(3)			20		°C
Supply current						
I_{DD}	Operating current			250	450	µA

1. Classification tested with exact resistor values. A 1% tolerance of classification resistor values is sufficient for compliance with IEEE 802.3af classification current limits.
2. Percentage of the intial steady state RTN inrush current value, below which inrush is terminated and PG goes active.
3. Not tested in production.
4. Gradually increase V_{RTN} from 0V until I_{RTN} disappears.

Obsolete Product(s) - Obsolete Product(s)

4 Package mechanical data

In order to meet environmental requirements, ST offers these devices in ECOPACK® packages. These packages have a Lead-free second level interconnect. The category of second Level Interconnect is marked on the package and on the inner box label, in compliance with JEDEC Standard JESD97. The maximum ratings related to soldering conditions are also marked on the inner box label. ECOPACK is an ST trademark. ECOPACK specifications are available at: www.st.com.

Obsolete Product(s) - Obsolete Product(s)

Figure 7. SO8 – 8-lead plastic small outline, 150 mils width, package outline

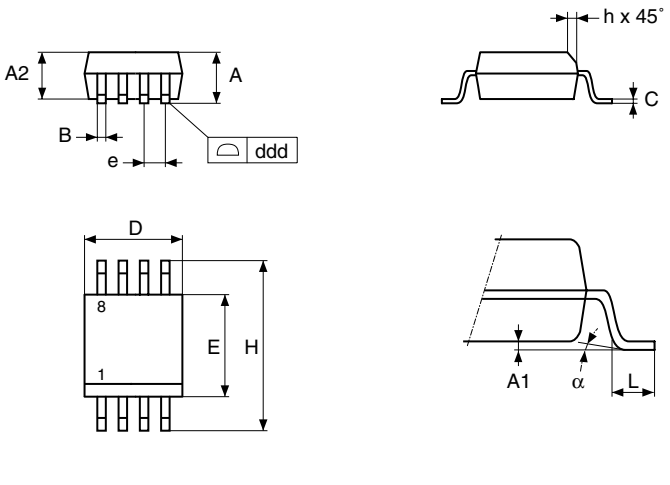

Note: Drawing is not to scale.

Table 7. SO8 – 8-lead plastic small outline, 150 mils width, package mechanical data

Symb	mm			inches		
	Typ	Min	Max	Typ	Min	Max
A	–	1.35	1.75	–	0.053	0.069
A1	–	0.10	0.25	–	0.004	0.010
B	–	0.33	0.51	–	0.013	0.020
C	–	0.19	0.25	–	0.007	0.010
D	–	4.80	5.00	–	0.189	0.197
ddd	–	–	0.10	–	–	0.004
E	–	3.80	4.00	–	0.150	0.157
e	1.27	–	–	0.050	–	–
H	–	5.80	6.20	–	0.228	0.244
h	–	0.25	0.50	–	0.010	0.020
L	–	0.40	0.90	–	0.016	0.035
α	–	0°	8°	–	0°	8°
N	8			8		

Obsolete Product(s) - Obsolete Product(s)

Figure 8. TSSOP8 – 8-lead, thin shrink small outline, 3x4.4mm, package outline

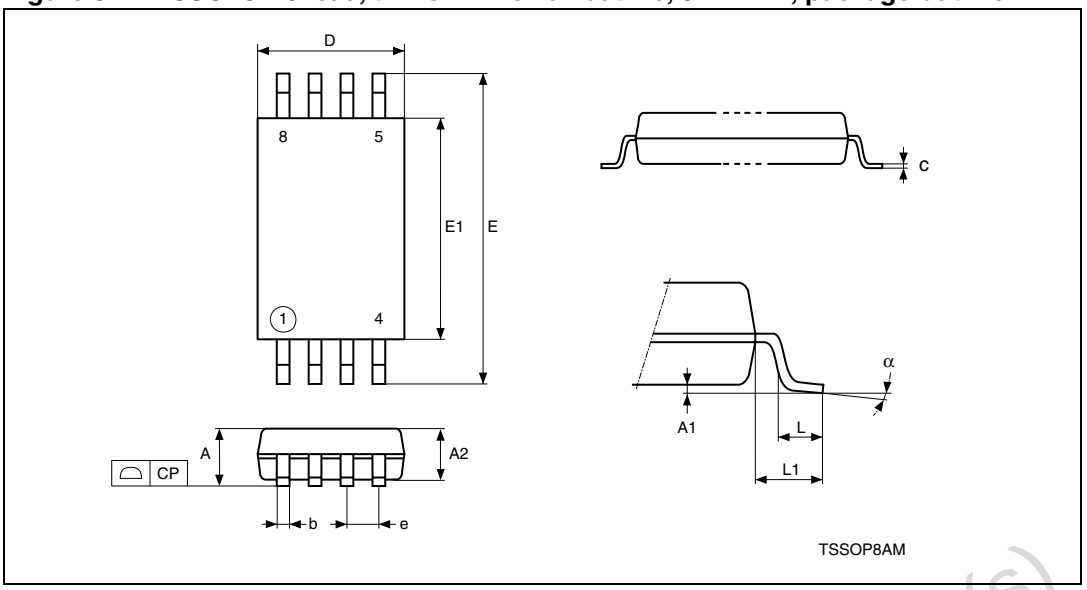

Note: Drawing is not to scale.

Table 8. TSSOP8 – 8-lead, thin shrink small outline, 3x4.4mm, package mechanical data

Symb	mm			inches		
	Typ	Min	Max	Typ	Min	Max
A			1.200			0.0472
A1		0.050	0.150		0.0020	0.0059
A2	1.000	0.800	1.050	0.0394	0.0315	0.0413
b		0.190	0.300		0.0075	0.0118
c		0.090	0.200		0.0035	0.0079
CP			0.100			0.0039
D	3.000	2.900	3.100	0.1181	0.1142	0.1220
e	0.650	–	–	0.0256	–	–
E	6.400	6.200	6.600	0.2520	0.2441	0.2598
E1	4.400	4.300	4.500	0.1732	0.1693	0.1772
L	0.600	0.450	0.750	0.0236	0.0177	0.0295
L1	1.000			0.0394		
α		0	8		0	8
N	8			8		

Obsolete Product(s) - Obsolete Product(s)

5 Part numbering

Table 9. Ordering information scheme

Example: STHS 2375A M 6 F

Device type

STHS

Product options

2375A = Standard UVLO, Auto

2375L = Standard UVLO, Latch

2376A = Programmable UVLO, Auto

2376L = Programmable UVLO, Latch

2377A = Legacy UVLO, Auto

2377L = Legacy UVLO, Latch

Package

M = SO8 (150mils width)

DW (1) = TSSOP8 3x4.4mm

Temperature range

6 = –40 to 85°C

Shipping method

F = ECOPACK Package, Tape & Reel

E = ECOPACK Package, Tube

1. Contact local ST sales office for availability.

For other options, or for more information on any aspect of this device, please contact the ST Sales Office nearest you.

Obsolete Product(s) - Obsolete Product(s)

6 Revision history

Table 10. Document revision history

Date	Revision	Changes
11-Aug-2006	1	Initial release.
19-Dec-2006	2	Updated *Features* and *Table 4*.
24-May-2007	3	Formatting changes, updated *Table 1*, *4*, *5*, *6*.
26-Jul-2007	4	Document status upgraded to full datasheet, updated cover page and *Table 9*.

Obsolete Product(s) - Obsolete Product(s)

Please Read Carefully:

Information in this document is provided solely in connection with ST products. STMicroelectronics NV and its subsidiaries (“ST”) reserve the right to make changes, corrections, modifications or improvements, to this document, and the products and services described herein at any time, without notice.

All ST products are sold pursuant to ST’s terms and conditions of sale.

Purchasers are solely responsible for the choice, selection and use of the ST products and services described herein, and ST assumes no liability whatsoever relating to the choice, selection or use of the ST products and services described herein.

No license, express or implied, by estoppel or otherwise, to any intellectual property rights is granted under this document. If any part of this document refers to any third party products or services it shall not be deemed a license grant by ST for the use of such third party products or services, or any intellectual property contained therein or considered as a warranty covering the use in any manner whatsoever of such third party products or services or any intellectual property contained therein.

UNLESS OTHERWISE SET FORTH IN ST’S TERMS AND CONDITIONS OF SALE ST DISCLAIMS ANY EXPRESS OR IMPLIED WARRANTY WITH RESPECT TO THE USE AND/OR SALE OF ST PRODUCTS INCLUDING WITHOUT LIMITATION IMPLIED WARRANTIES OF MERCHANTABILITY, FITNESS FOR A PARTICULAR PURPOSE (AND THEIR EQUIVALENTS UNDER THE LAWS OF ANY JURISDICTION), OR INFRINGEMENT OF ANY PATENT, COPYRIGHT OR OTHER INTELLECTUAL PROPERTY RIGHT.

UNLESS EXPRESSLY APPROVED IN WRITING BY AN AUTHORIZED ST REPRESENTATIVE, ST PRODUCTS ARE NOT RECOMMENDED, AUTHORIZED OR WARRANTED FOR USE IN MILITARY, AIR CRAFT, SPACE, LIFE SAVING, OR LIFE SUSTAINING APPLICATIONS, NOR IN PRODUCTS OR SYSTEMS WHERE FAILURE OR MALFUNCTION MAY RESULT IN PERSONAL INJURY, DEATH, OR SEVERE PROPERTY OR ENVIRONMENTAL DAMAGE. ST PRODUCTS WHICH ARE NOT SPECIFIED AS "AUTOMOTIVE GRADE" MAY ONLY BE USED IN AUTOMOTIVE APPLICATIONS AT USER’S OWN RISK.

Resale of ST products with provisions different from the statements and/or technical features set forth in this document shall immediately void any warranty granted by ST for the ST product or service described herein and shall not create or extend in any manner whatsoever, any liability of ST.

ST and the ST logo are trademarks or registered trademarks of ST in various countries.

Information in this document supersedes and replaces all information previously supplied.

The ST logo is a registered trademark of STMicroelectronics. All other names are the property of their respective owners.

© 2007 STMicroelectronics - All rights reserved

STMicroelectronics group of companies

Australia - Belgium - Brazil - Canada - China - Czech Republic - Finland - France - Germany - Hong Kong - India - Israel - Italy - Japan - Malaysia - Malta - Morocco - Singapore - Spain - Sweden - Switzerland - United Kingdom - United States of America

www.st.com