STGW40NC60W

40 A - 600 V - ultra fast IGBT

Features

- Low C_{RES} / C_{IES} ratio (no cross conduction susceptibility)
- High frequency operation

Applications

- High frequency inverters, UPS
- Motor drivers
- HF, SMPS and PFC in both hard switch and resonant topologies
- Welding
- Induction heating

Description

This IGBT utilizes the advanced PowerMESH™ process resulting in an excellent trade-off between switching performance and low on-state behavior.

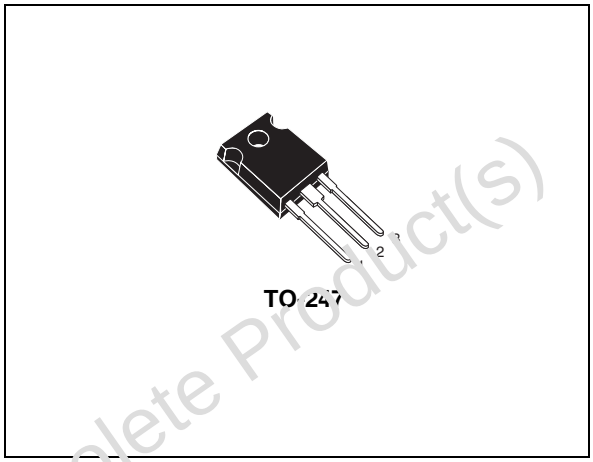

Figure 1. Internal schematic diagram

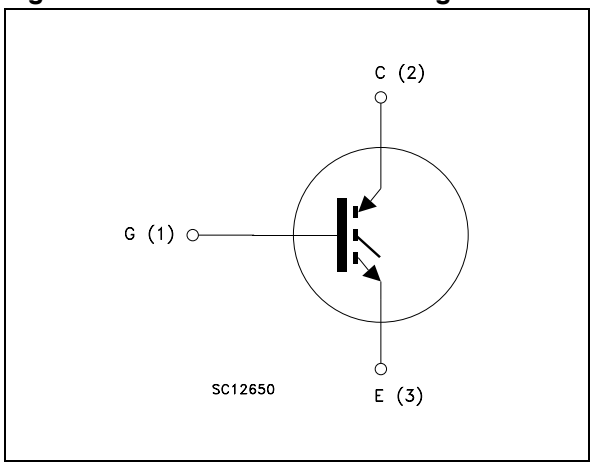

Table 1. Device summary

Order code	Marking	Package	Packaging
STGW40NC60W	GW40NC60W	TO-247	Tube

Obsolete Product(s) - Obsolete Product(s)

Contents

1 Electrical ratings 3

2 Electrical characteristics 4

2.1 Electrical characteristics (curves) 6

3 Test circuit 9

4 Package mechanical data 10

5 Revision history 12

Obsolete Product(s) - Obsolete Product(s)

1 Electrical ratings

Table 2. Absolute maximum ratings

Symbol	Parameter	Value	Unit
V_{CES}	Collector-emitter voltage (V_{GE} = 0)	600	V
I_C (1)	Collector current (continuous) at 25 °C	70	A
I_C (1)	Collector current (continuous) at 100 °C	40	A
I_{CL} (2)	Turn-off latching current	230	A
I_{CP} (3)	Pulsed collector current	230	A
V_{GE}	Gate-emitter voltage	±20	V
P_{TOT}	Total dissipation at T_C = 25 °C	250	W
T_j	Operating junction temperature	-55 to 150	°C

1. Calculated according to the iterative formula:

$$I_C(T_C) = \frac{T_{JMAX} - T_C}{R_{THJ-C} \times V_{CESAT(MAX)}(T_C, I_C)}$$

2. Vclamp = 80%(V_{CES}), Tj = 150 °C, R_G = 10 Ω, V_{GE} = 15 V
3. Pulse width limited by max. junction temperature allowed

Table 3. Thermal resistance

Symbol	Parameter	Value	Unit
$R_{thj\text{-}case}$	Thermal resistance junction-case max	0.5	°C/W
$R_{thj\text{-}amb}$	Thermal resistance junction-ambient max	50	°C/W

Obsolete Product(s) - Obsolete Product(s)

2 Electrical characteristics

(T_{CASE}=25 °C unless otherwise specified)

Table 4. Static

Symbol	Parameter	Test conditions	Min.	Typ.	Max.	Unit
$V_{(BR)CES}$	Collector-emitter breakdown voltage (V_{GE} = 0)	I_C = 1 mA	600			V
$V_{CE(sat)}$	Collector-emitter saturation voltage	V_{GE}= 15 V, I_C= 30 A V_{GE}= 15 V, I_C= 30 A, T_C=125 °C		2.1 1.9	2.5	V V
$V_{GE(th)}$	Gate threshold voltage	V_{CE}= V_{GE}, I_C= 250µA	3.75		5.75	V
I_{CES}	Collector-emitter cut-off current (V_{GE} = 0)	V_{GE} = 600 V V_{GE} = 600 V, T_C=125 °C			500 5	µA mA
I_{GES}	Gate-emitter cut-off current (V_{CE} = 0)	V_{GE} = ± 20 V			±100	nA
g_{fs}	Forward transconductance	V_{CE} = 15 V, I_C= 30 A		20		S

Table 5. Dynamic

Symbol	Parameter	Test conditions	Min.	Typ.	Max.	Unit
C_{ies} C_{oes} C_{res}	Input capacitance Output capacitance Reverse transfer capacitance	V_{CE} = 25 V, f = 1 MHz, V_{GE}= 0		2900 298 59		pF pF pF
Q_g Q_{ge} Q_{gc}	Total gate charge Gate-emitter charge Gate-collector charge	V_{CE} = 390 V, I_C = 30 A, V_{GE} = 15 V *(see Figure 17)*		126 16 46		nC nC nC

Obsolete Product(s) - Obsolete Product(s)

Table 6. Switching on/off (inductive load)

Symbol	Parameter	Test conditions	Min.	Typ.	Max.	Unit
$t_{d(on)}$ t_r $(di/dt)_{on}$	Turn-on delay time Current rise time Turn-on current slope	V_{CC} = 390 V, I_C = 30 A R_G= 10 Ω, V_{GE}= 15 V *(see Figure 16)*		33 12 2600		ns ns A/µs
$t_{d(on)}$ t_r $(di/dt)_{on}$	Turn-on delay time Current rise time Turn-on current slope	V_{CC} = 390 V, I_C = 30 A R_G= 10 Ω, V_{GE}= 15 V, T_C= 125 °C *(see Figure 16)*		32 14 2300		ns ns A/µs
$t_r(V_{off})$ $t_{d(off)}$ t_f	Off voltage rise time Turn-off delay time Current fall time	V_{CC} = 390 V, I_C = 30 A, R_{GE} = 10 Ω, V_{GE} =15 V *(see Figure 16)*		26 168 36		ns ns ns
$t_r(V_{off})$ $t_{d(off)}$ t_f	Off voltage rise time Turn-off delay time Current fall time	V_{CC} = 390 V, I_C = 30 A, R_{GE}=10 Ω, V_{GE} =15 V T_C=125 °C *(see Figure 16)*		54 213 67		ns ns ns

Table 7. Switching energy (inductive load)

Symbol	Parameter	Test conditions	Min	Typ.	Max	Unit
E_{on} (1) E_{off} (2) E_{ts}	Turn-on switching losses Turn-off switching losses Total switching losses	V_{CC} = 390 V, I_C = 30 A R_G= 10 Ω, V_{GE}= 15 V *(see Figure 16)*		302 349 651		µJ µJ µJ
E_{on} (1) E_{off} (2) E_{ts}	Turn-on switching losses Turn-off switching losses Total switching losses	V_{CC} = 390 V, I_C = 30 A R_G= 10 Ω, V_{GE}= 15 V, T_C= 125 °C *(see Figure 16)*		553 750 1303		µJ µJ µJ

1. Eon is the turn-on losses when a typical diode is used in the test circuit in figure 2 Eon include diode recovery energy. If the IGBT is offered in a package with a co-pak diode, the co-pack diode is used as external diode. IGBTs & diode are at the same temperature (25 °C and 125 °C)
2. Turn-off losses include also the tail of the collector current

Obsolete Product(s) - Obsolete Product(s)

2.1 Electrical characteristics (curves)

Figure 2. Output characteristics

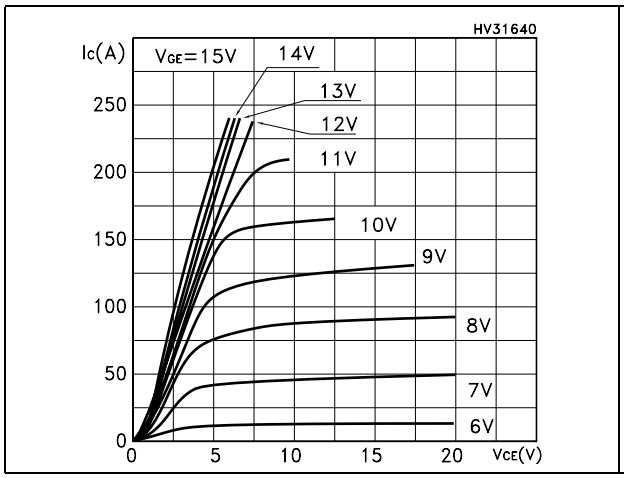

Figure 3. Transfer characteristics

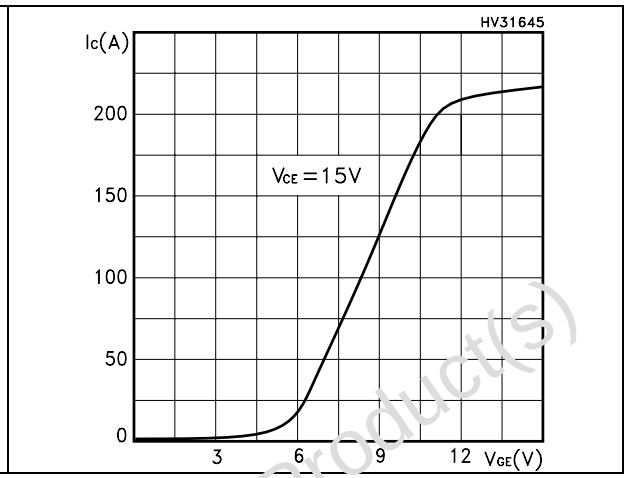

Figure 4. Transconductance

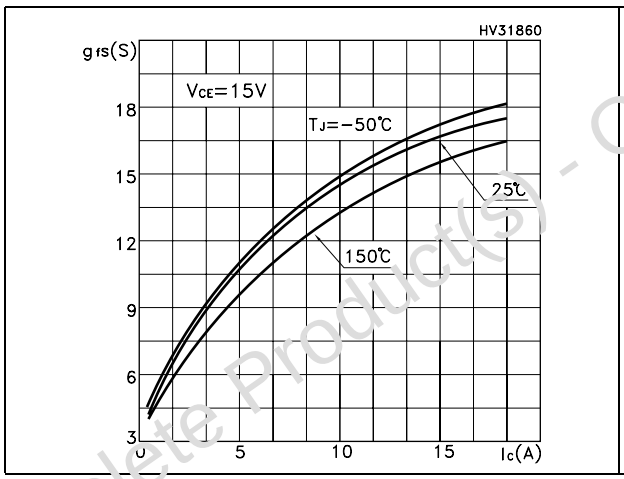

Figure 5. Collector emitter on voltage vs temperature

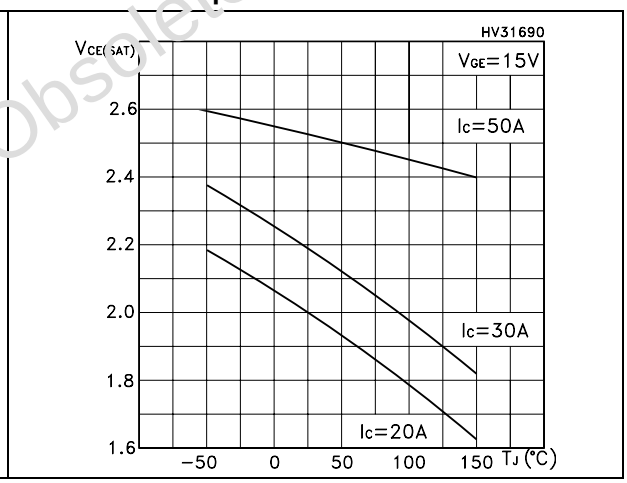

Figure 6. Collector-emitter on voltage vs collector current

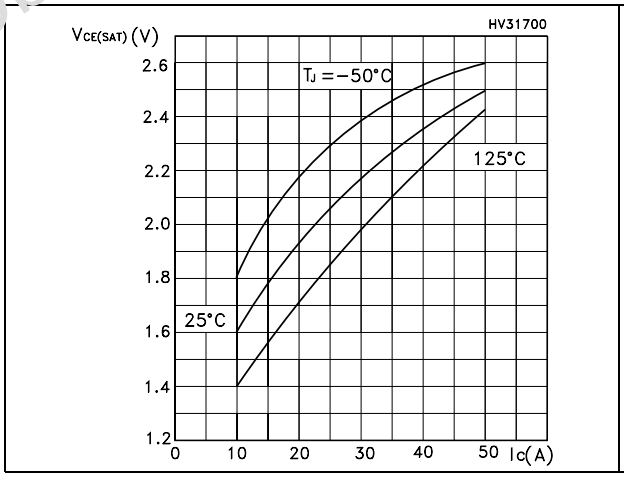

Figure 7. Normalized gate threshold vs temperature

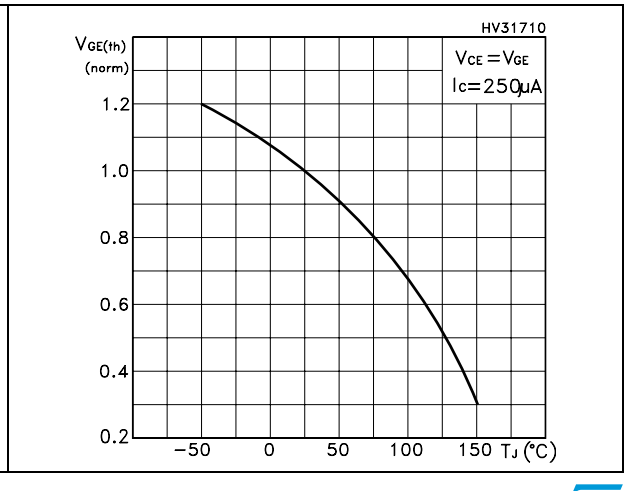

Obsolete Product(s) - Obsolete Product(s)

Figure 8. Normalized breakdown voltage vs temperature

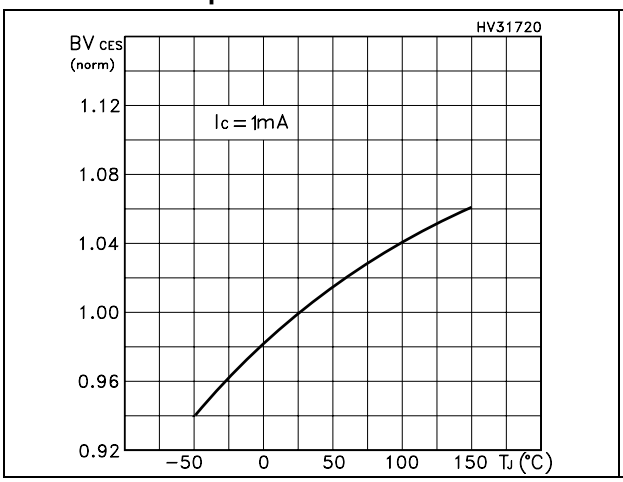

Figure 9. Gate charge vs gate-emitter voltage

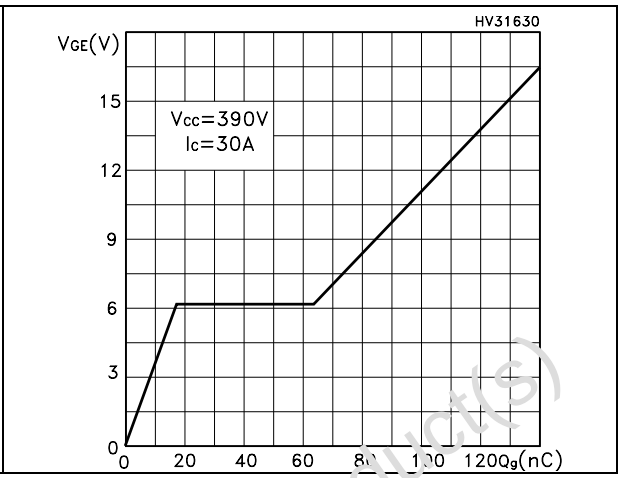

Figure 10. Capacitance variations

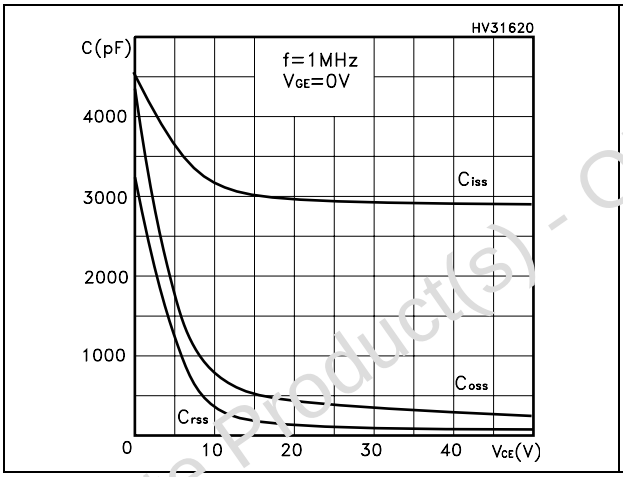

Figure 11. Switching losses vs temperature

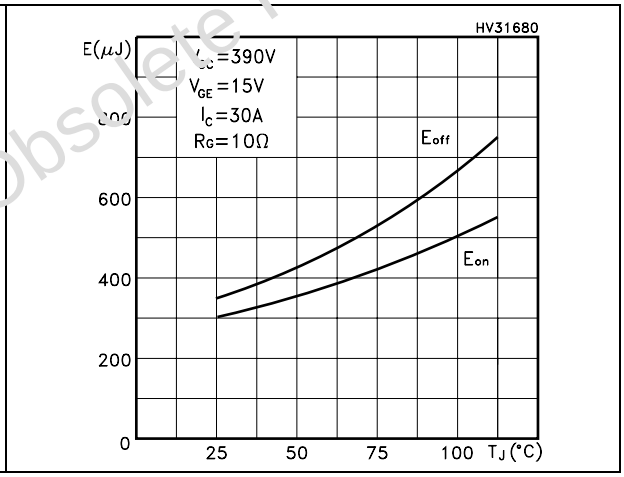

Figure 12. Switching losses vs gate resistance

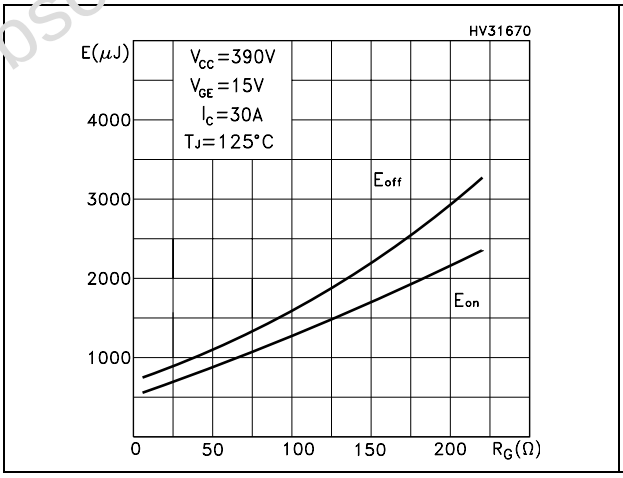

Figure 13. Switching losses vs collector current

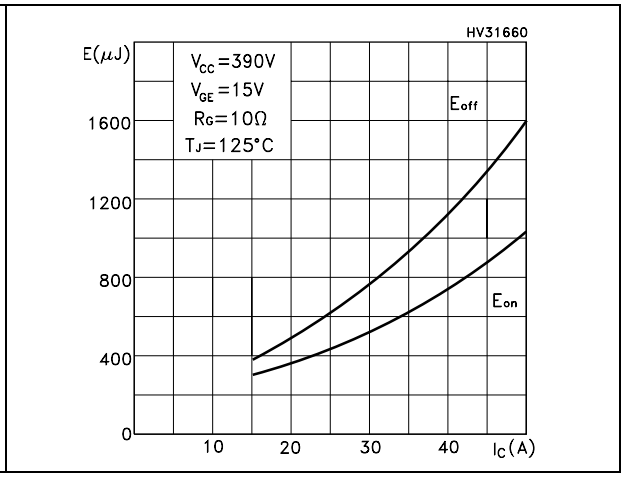

Obsolete Product(s) - Obsolete Product(s)

Figure 14. Thermal impedance

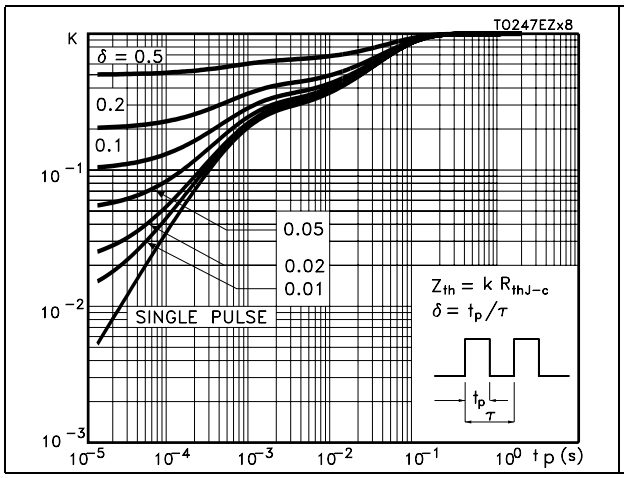

Figure 15. Turn-off SOA

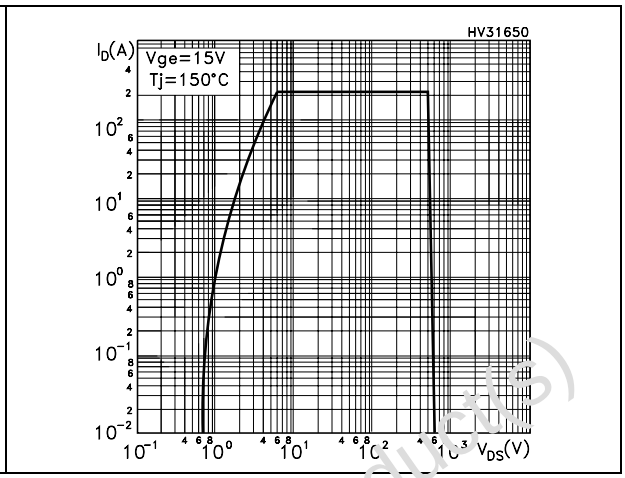

Obsolete Product(s) - Obsolete Product(s)

3 Test circuit

Figure 16. Test circuit for inductive load switching

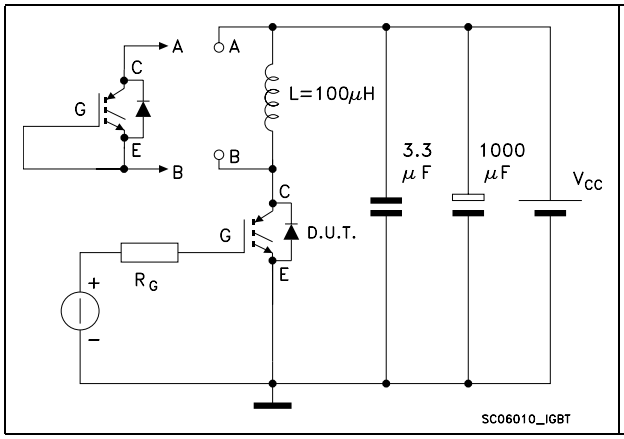

Figure 17. Gate charge test circuit

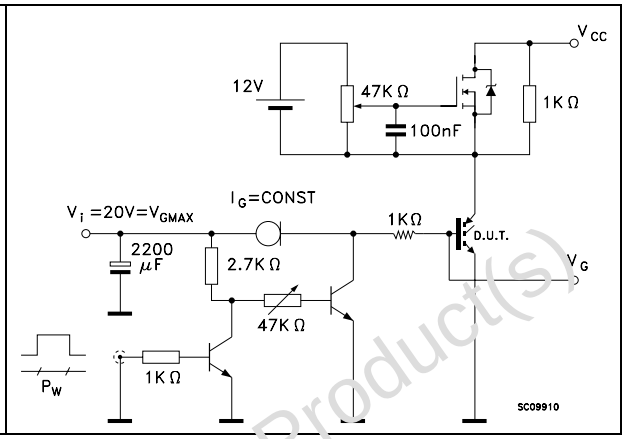

Figure 18. Switching waveforms

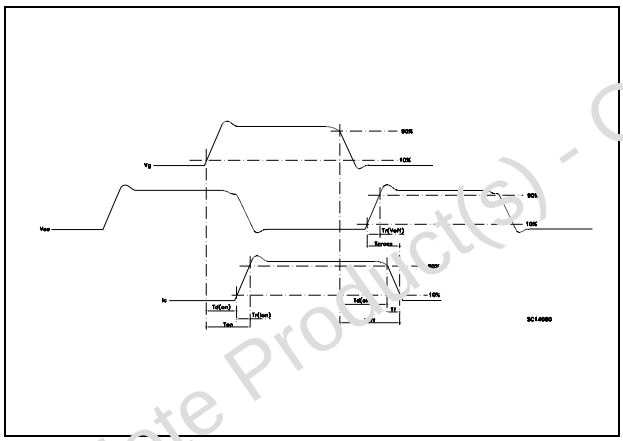

Obsolete Product(s) - Obsolete Product(s)

4 Package mechanical data

In order to meet environmental requirements, ST offers these devices in ECOPACK® packages. These packages have a Lead-free second level interconnect. The category of second level interconnect is marked on the package and on the inner box label, in compliance with JEDEC Standard JESD97. The maximum ratings related to soldering conditions are also marked on the inner box label. ECOPACK is an ST trademark. ECOPACK specifications are available at: *www.st.com*

Obsolete Product(s) - Obsolete Product(s)

TO-247 Mechanical data

Dim.	mm.		
	Min.	Typ	Max.
A	4.85		5.15
A1	2.20		2.60
b	1.0		1.40
b1	2.0		2.40
b2	3.0		3.40
c	0.40		0.80
D	19.85		20.15
E	15.45		15.75
e		5.45	
L	14.20		14.80
L1	3.70		4.30
L2		18.50	
øP	3.55		3.65
øR	4.50		5.50
S		5.50	

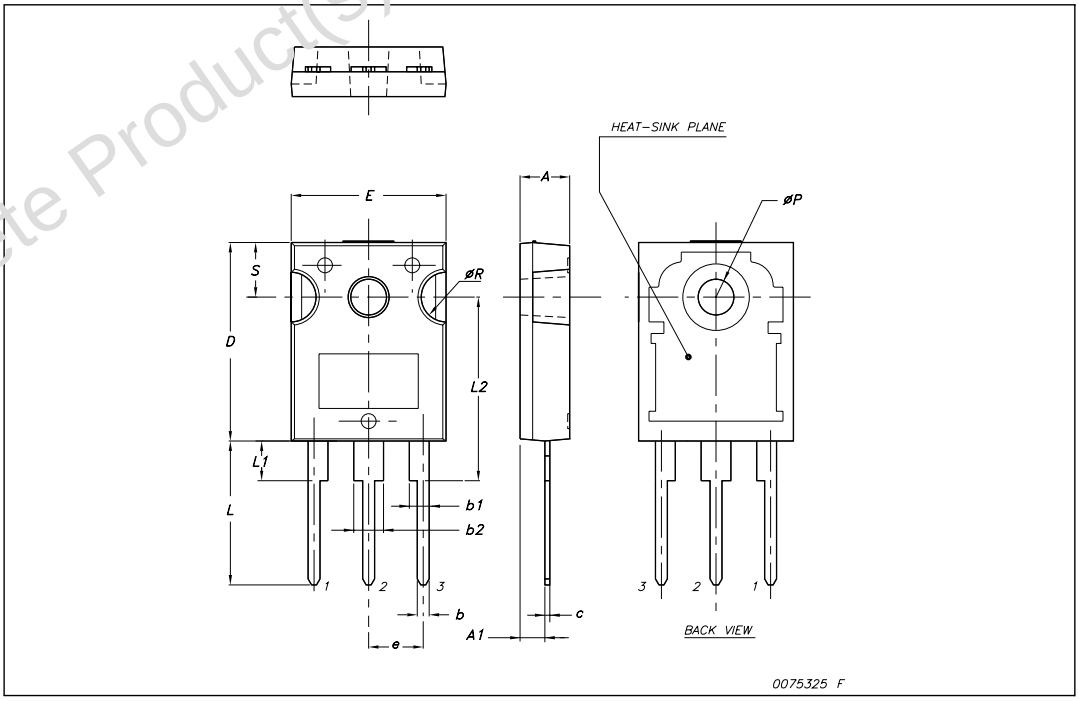

Obsolete Product(s) - Obsolete Product(s)

5 Revision history

Table 8. Document revision history

Date	Revision	Changes
09-Jul-2008	1	First release

Obsolete Product(s) - Obsolete Product(s)

Please Read Carefully:

Information in this document is provided solely in connection with ST products. STMicroelectronics NV and its subsidiaries ("ST") reserve the right to make changes, corrections, modifications or improvements, to this document, and the products and services described herein at any time, without notice.

All ST products are sold pursuant to ST's terms and conditions of sale.

Purchasers are solely responsible for the choice, selection and use of the ST products and services described herein, and ST assumes no liability whatsoever relating to the choice, selection or use of the ST products and services described herein.

No license, express or implied, by estoppel or otherwise, to any intellectual property rights is granted under this document. If any part of this document refers to any third party products or services it shall not be deemed a license grant by ST for the use of such third party products or services, or any intellectual property contained therein or considered as a warranty covering the use in any manner whatsoever of such third party products or services or any intellectual property contained therein.

UNLESS OTHERWISE SET FORTH IN ST'S TERMS AND CONDITIONS OF SALE ST DISCLAIMS ANY EXPRESS OR IMPLIED WARRANTY WITH RESPECT TO THE USE AND/OR SALE OF ST PRODUCTS INCLUDING WITHOUT LIMITATION IMPLIED WARRANTIES OF MERCHANTABILITY, FITNESS FOR A PARTICULAR PURPOSE (AND THEIR EQUIVALENTS UNDER THE LAWS OF ANY JURISDICTION), OR INFRINGEMENT OF ANY PATENT, COPYRIGHT OR OTHER INTELLECTUAL PROPERTY RIGHT.

UNLESS EXPRESSLY APPROVED IN WRITING BY AN AUTHORIZED ST REPRESENTATIVE, ST PRODUCTS ARE NOT RECOMMENDED, AUTHORIZED OR WARRANTED FOR USE IN MILITARY, AIR CRAFT, SPACE, LIFE SAVING, OR LIFE SUSTAINING APPLICATIONS, NOR IN PRODUCTS OR SYSTEMS WHERE FAILURE OR MALFUNCTION MAY RESULT IN PERSONAL INJURY, DEATH, OR SEVERE PROPERTY OR ENVIRONMENTAL DAMAGE. ST PRODUCTS WHICH ARE NOT SPECIFIED AS "AUTOMOTIVE GRADE" MAY ONLY BE USED IN AUTOMOTIVE APPLICATIONS AT USER'S OWN RISK.

Resale of ST products with provisions different from the statements and/or technical features set forth in this document shall immediately void any warranty granted by ST for the ST product or service described herein and shall not create or extend in any manner whatsoever, any liability of ST.

ST and the ST logo are trademarks or registered trademarks of ST in various countries.

Information in this document supersedes and replaces all information previously supplied.

The ST logo is a registered trademark of STMicroelectronics. All other names are the property of their respective owners.

© 2008 STMicroelectronics - All rights reserved

STMicroelectronics group of companies

Australia - Belgium - Brazil - Canada - China - Czech Republic - Finland - France - Germany - Hong Kong - India - Israel - Italy - Japan - Malaysia - Malta - Morocco - Singapore - Spain - Sweden - Switzerland - United Kingdom - United States of America

www.st.com

Obsolete Product(s) - Obsolete Product(s)