STW90NF20

N-channel 200 V, 0.019 Ω, 83 A, TO-247 low gate charge STripFET™ Power MOSFET

Features

Type	V_{DSS}	$R_{DS(on)}$ max	I_D
STW90NF20	200 V	< 0.023 Ω	83 A

- Exceptional dv/dt capability
- Low gate charge
- 100% Avalanche tested

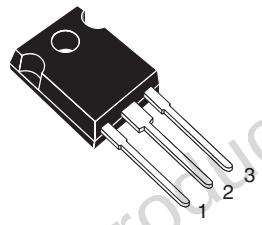

TO-247

Application

- Switching applications

Description

This Power MOSFET series realized with STMicroelectronics unique STripFET™ process has specifically been designed to minimize input capacitance and gate charge. It is therefore suitable as primary switch in advanced high-efficiency isolated DC-DC converters

Figure 1. Internal schematic diagram

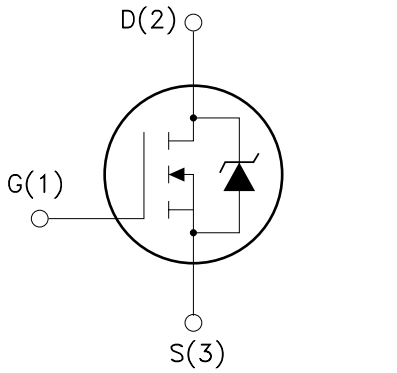

Table 1. Device summary

Order code	Marking	Package	Packaging
STW90NF20	90NF20	TO-247	Tube

Obsolete Product(s) - Obsolete Product(s)

Contents

1 Electrical ratings 3

2 Electrical characteristics 4

2.1 Electrical characteristics (curves) 6

3 Test circuits 8

4 Package mechanical data 9

5 Revision history 11

Obsolete Product(s) - Obsolete Product(s)

1 Electrical ratings

Table 1. Absolute maximum ratings

Symbol	Parameter	Value	Unit
V_{DS}	Drain-source voltage (V_{GS} = 0)	200	V
V_{GS}	Gate-source voltage	± 20	V
I_D	Drain current (continuous) at T_C = 25 °C	83	A
I_D	Drain current (continuous) at T_C = 100 °C	52	A
I_{DM} (1)	Drain current (pulsed)	332	A
	Derating factor	2.4	W/°C
P_{TOT}	Total dissipation at T_C = 25 °C	300	W
dv/dt (2)	Peak diode recovery voltage slope	15	V/ns
T_J Tstg	Operating junction temperature Storage temperature	-50 to 150	°C

1. Pulse width limited by safe operating area
2. $I_{SD} \leq 83$ A, di/dt $\leq$ 400 A/µs, $V_{DD} \leq$ 80% $V_{(BR)DSS}$

Table 2. Thermal resistance

Symbol	Parameter	Value	Unit
$R_{thj\text{-}case}$	Thermal resistance junction-case max	0.42	°C/W
$R_{thj\text{-}amb}$	Thermal resistance junction-ambient max	50	°C/W
T_l	Maximum lead temperature for soldering purpose	300	°C

Table 3. Avalanche characteristics

Symbol	Parameter	Max value	Unit
I_{AR}	Avalanche current, repetitive or not-repetitive (pulse width limited by T_J max)	83	A
E_{AS}	Single pulse avalanche energy (starting T_J = 25 °C, $I_D = I_{AR}$, V_{DD} = 50 V)	400	mJ

Obsolete Product(s) - Obsolete Product(s)

2 Electrical characteristics

(T_{CASE} = 25 °C unless otherwise specified)

Table 4. On/off states

Symbol	Parameter	Test conditions	Min.	Typ.	Max.	Unit
$V_{(BR)DSS}$	Drain-source breakdown voltage	I_D = 1 mA, V_{GS} = 0	200			V
I_{DSS}	Zero gate voltage drain current (V_{GS} = 0)	V_{DS} = Max rating, V_{DS} = Max rating @125 °C			1 10	µA µA
I_{GSS}	Gate body leakage current (V_{DS} = 0)	V_{DS} = ± 20 V			±100	nA
$V_{GS(th)}$	Gate threshold voltage	V_{DS} = V_{GS}, I_D = 250 µA	2	3	4	V
$R_{DS(on)}$	Static drain-source on resistance	V_{GS}= 10 V, I_D= 45 A		0.018	0.023	Ω

Table 5. Dynamic

Symbol	Parameter	Test conditions	Min.	Typ.	Max.	Unit
g_{fs} (1)	Forward transconductance	V_{DS} = 15 V, I_D = 45 A		40		S
C_{iss} C_{oss} C_{rss}	Input capacitance Output capacitance Reverse Transfer Capacitance	V_{DS} = 25 V, f = 1 MHz, V_{GS} = 0		5736 1126 196		pF pF pF
$C_{oss\ eq.}$ (2)	Equivalent output capacitance	V_{DS} = 0 to 160 V, V_{GS} = 0		687		pF
R_G	Intrinsic gate resistance	f = 1 MHz open drain		1.7		Ω
Q_g Q_{gs} Q_{gd}	Total gate charge Gate-source charge Gate-drain charge	V_{DD} = 160 V, I_D = 83 A, V_{GS} = 10 V *(see Figure 15)*		164 46 72		nC nC nC

1. Pulsed: pulse duration = 300µs, duty cycle 1.5%
2. $C_{oss\ eq.}$ is defined as a constant equivalent capacitance giving the same charging time as C_{oss} when V_{DS} increases from 0 to 80% V_{DSS}

Obsolete Product(s) - Obsolete Product(s)

Table 6. Switching times

Symbol	Parameter	Test conditions	Min.	Typ.	Max.	Unit
$t_{d(on)}$ t_r $t_{d(off)}$ t_f	Turn-on delay time Rise time Turn-off delay time Fall time	V_{DD} = 100 V, I_D = 41.5 A R_G = 4.7 Ω, V_{GS} = 10 V, *(see Figure 14)*		24 138 148 142		ns ns ns ns

Table 7. Source drain diode

Symbol	Parameter	Test conditions	Min.	Typ.	Max.	Unit
I_{SD} I_{SDM}(1)	Source-drain current Source-drain current (pulsed)				83 332	A A
V_{SD}(2)	Forward on voltage	I_{SD} = 83 A, V_{GS} = 0			1.6	V
t_{rr} Q_{rr} I_{RRM}	Reverse recovery time Reverse recovery charge Reverse recovery current	I_{SD} = 83 A,V_{DD} = 100 V di/dt = 100 A/µs *(see Figure 19)*		200 1.6 16		ns µC A
t_{rr} Q_{rr} I_{RRM}	Reverse recovery time Reverse recovery charge Reverse recovery current	I_{SD} =83 A, V_{DD} = 100 V di/dt = 100 A/µs T_j = 150°C *(see Figure 19)*		235 2.2 18		ns µC A

1. Pulse with limited by maximum temperature
2. Pulsed: pulse duration = 300µs, duty cycle 1.5%

Obsolete Product(s) - Obsolete Product(s)

2.1 Electrical characteristics (curves)

Figure 2. Safe operating area

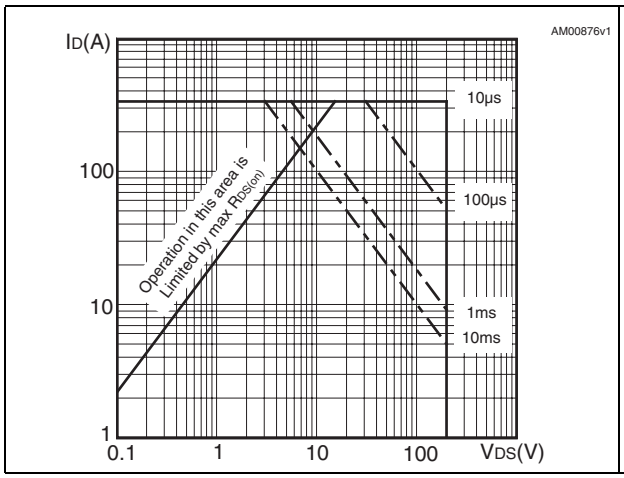

Figure 3. Thermal impedance

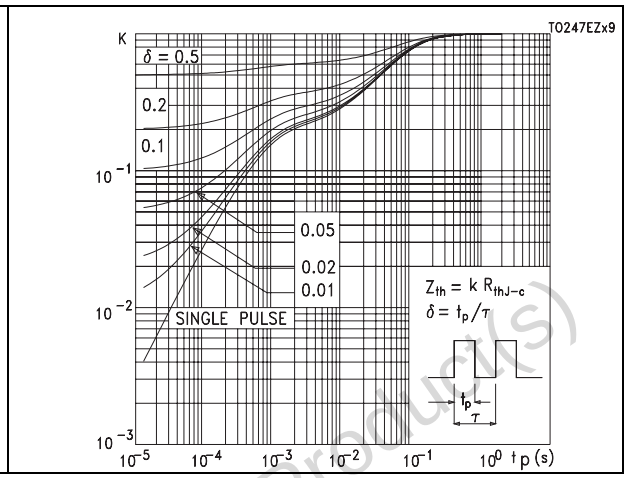

Figure 4. Output characteristics

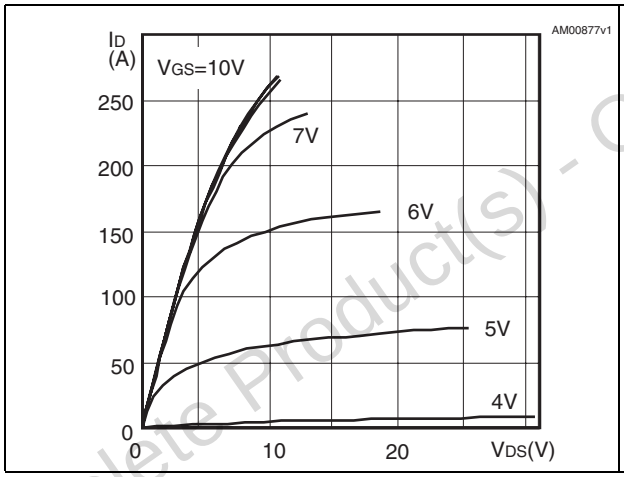

Figure 5. Transfer characteristics

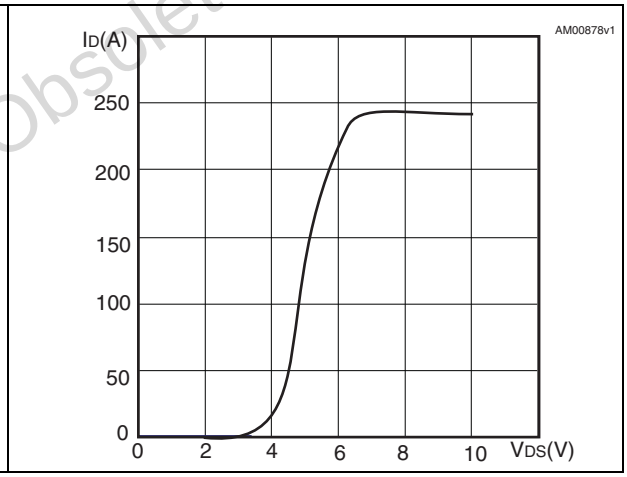

Figure 6. Normalized BV_{DSS} vs temperature

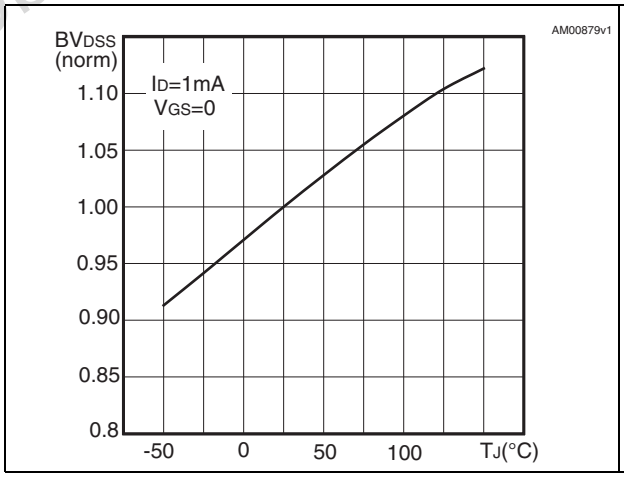

Figure 7. Static drain-source on resistance

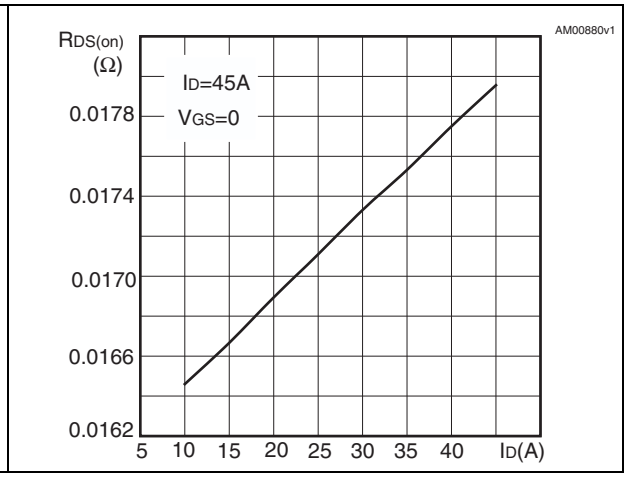

Obsolete Product(s) - Obsolete Product(s)

Figure 8. Gate charge vs gate-source voltage

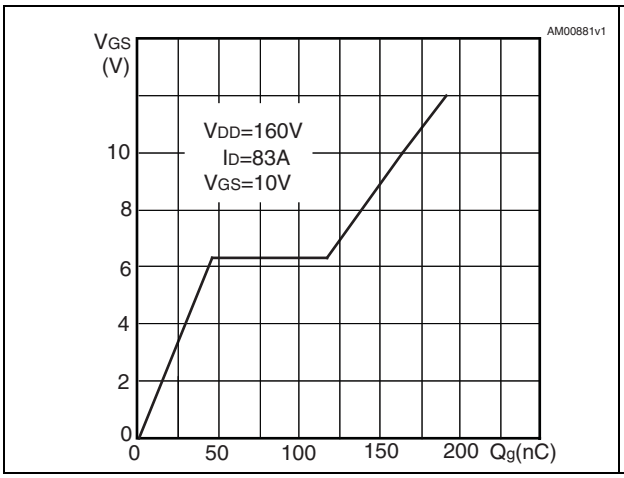

Figure 9. Capacitance variations

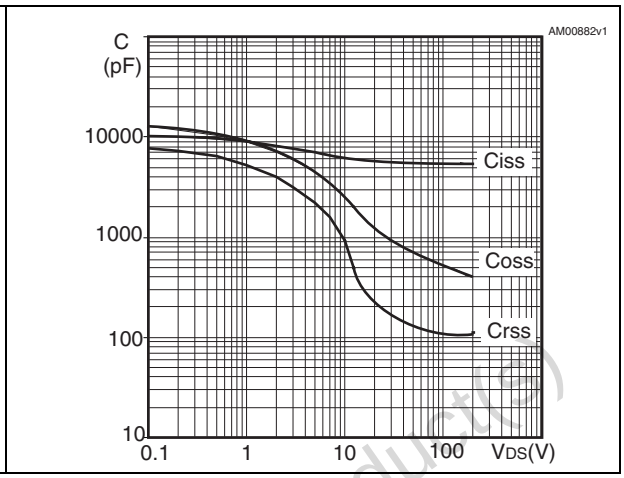

Figure 10. Normalized gate threshold voltage vs temperature

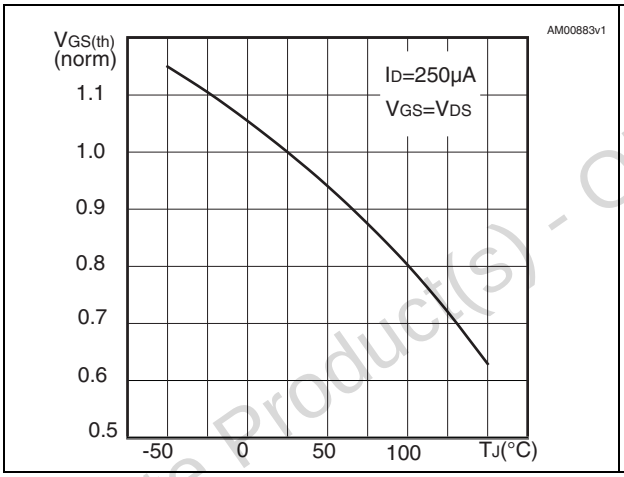

Figure 11. Normalized on resistance vs temperature

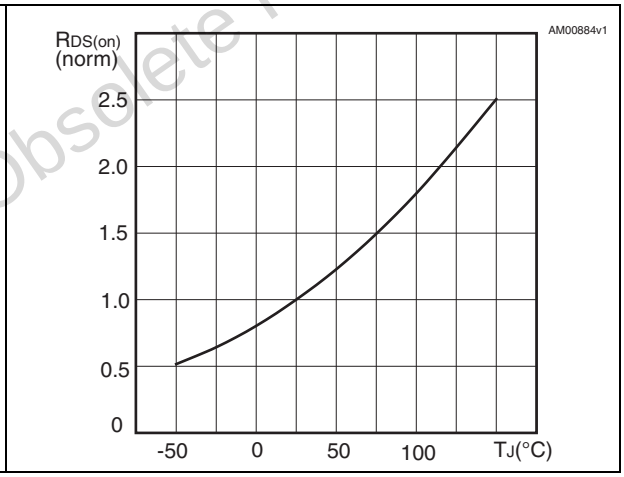

Figure 12. Source-drain diode forward characteristics

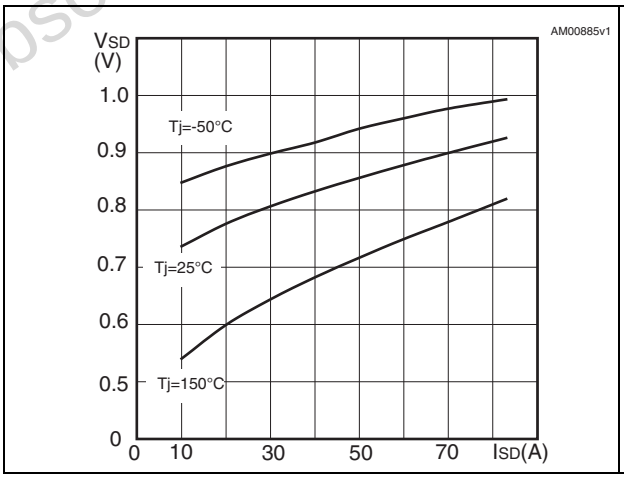

Figure 13. Maximum avalanche energy vs temperature

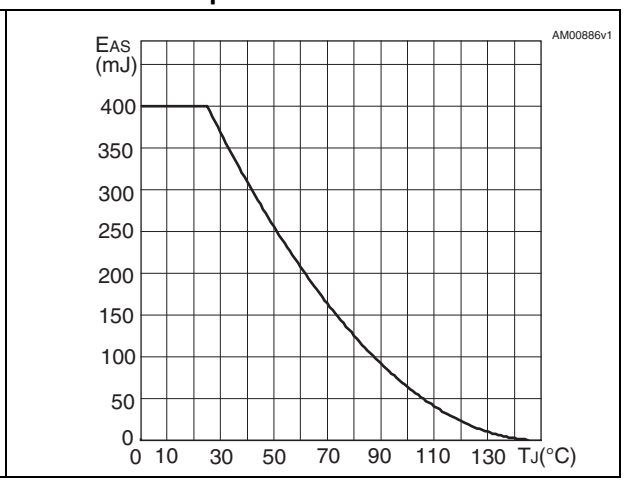

Obsolete Product(s) - Obsolete Product(s)

3 Test circuits

Figure 14. Switching times test circuit for resistive load

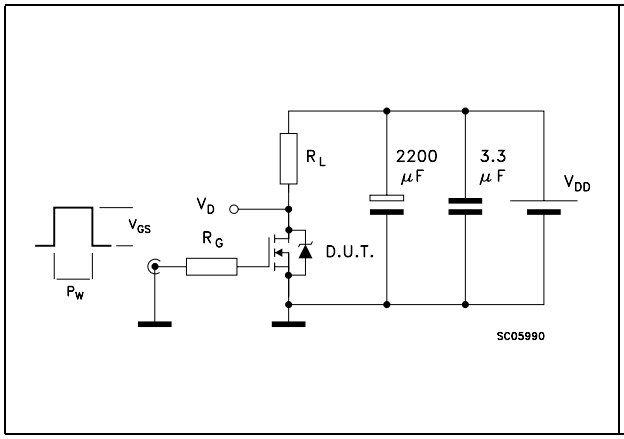

Figure 15. Gate charge test circuit

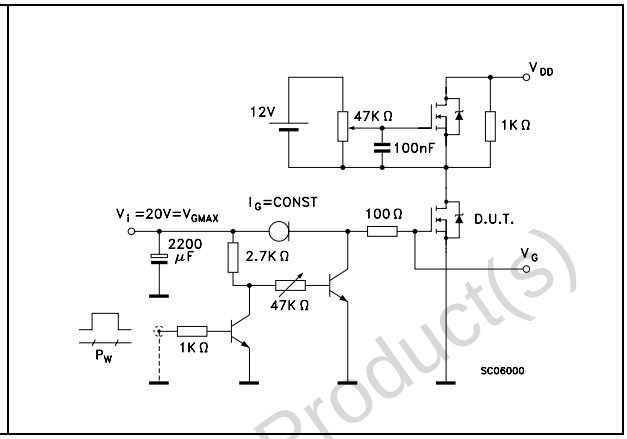

Figure 16. Test circuit for inductive load switching and diode recovery times

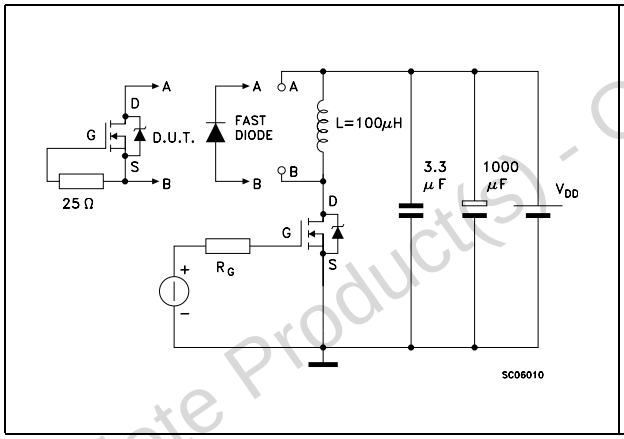

Figure 17. Unclamped inductive load test circuit

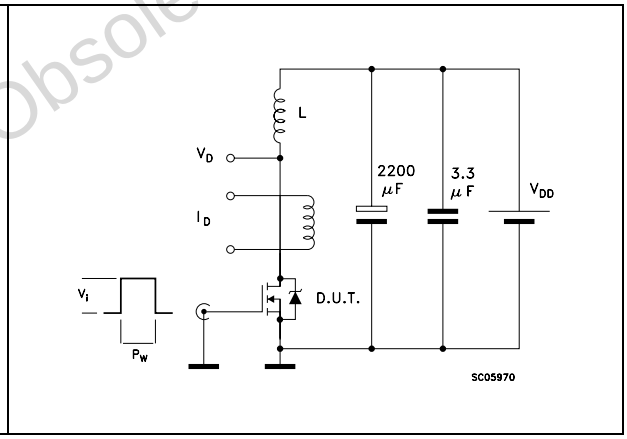

Figure 18. Unclamped inductive waveform

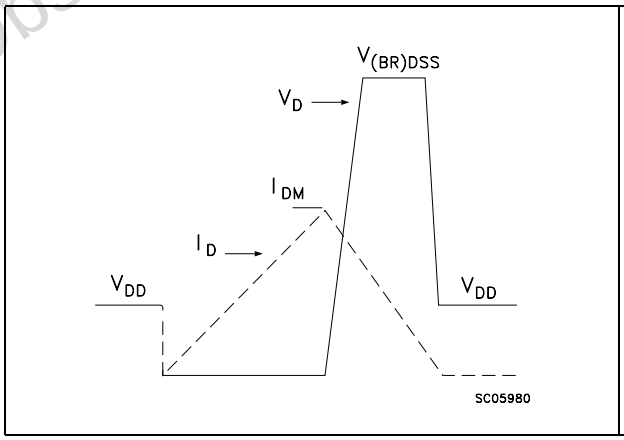

Figure 19. Switching time waveform

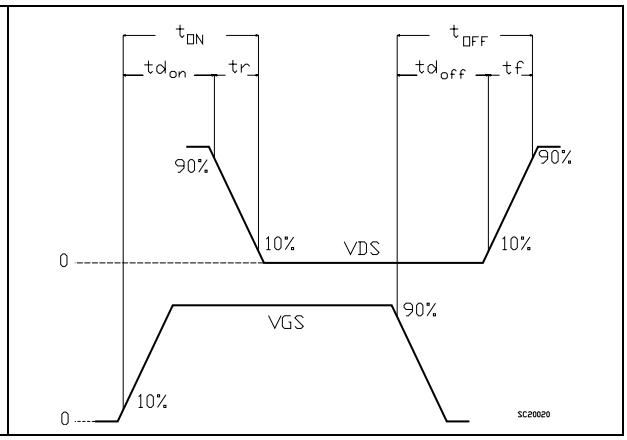

Obsolete Product(s) - Obsolete Product(s)

4 Package mechanical data

In order to meet environmental requirements, ST offers these devices in ECOPACK® packages. These packages have a Lead-free second level interconnect. The category of second level interconnect is marked on the package and on the inner box label, in compliance with JEDEC Standard JESD97. The maximum ratings related to soldering conditions are also marked on the inner box label. ECOPACK is an ST trademark. ECOPACK specifications are available at: *www.st.com*

Obsolete Product(s) - Obsolete Product(s)

TO-247 Mechanical data

Dim.	mm.		
	Min.	Typ	Max.
A	4.85		5.15
A1	2.20		2.60
b	1.0		1.40
b1	2.0		2.40
b2	3.0		3.40
c	0.40		0.80
D	19.85		20.15
E	15.45		15.75
e		5.45	
L	14.20		14.80
L1	3.70		4.30
L2		18.50	
øP	3.55		3.65
øR	4.50		5.50
S		5.50	

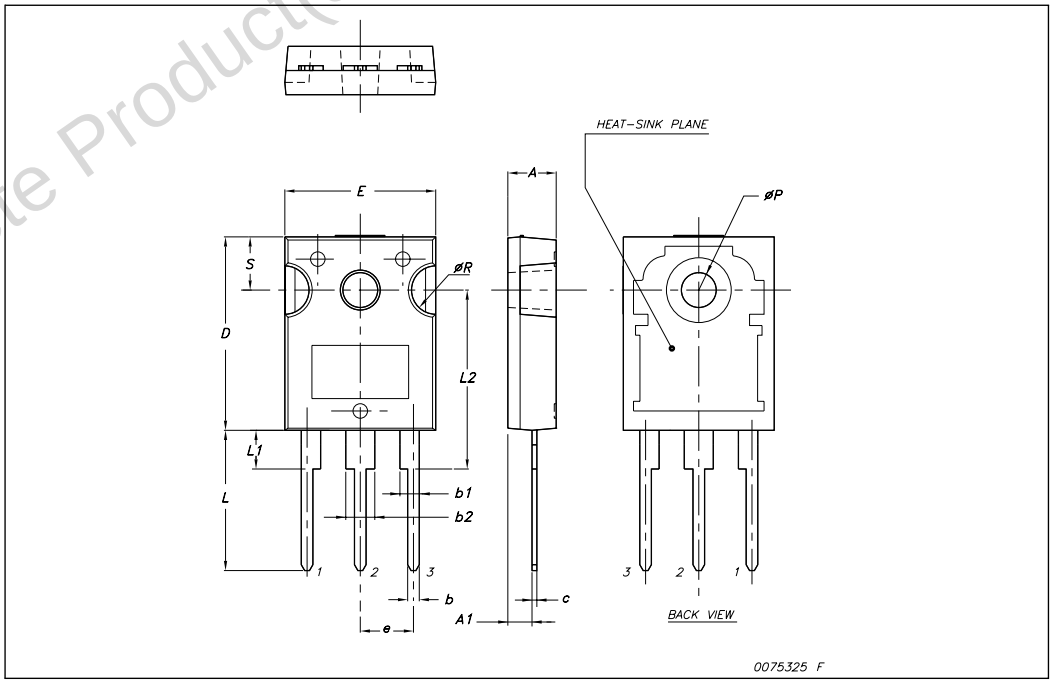

Obsolete Product(s) - Obsolete Product(s)

5 Revision history

Table 8. Document revision history

Date	Revision	Changes
28-Aug-2007	1	First release
04-Aug-2008	2	Document status promoted from preliminary data to datasheet.

Obsolete Product(s) - Obsolete Product(s)

Obsolete Product(s) - Obsolete Product(s)

Please Read Carefully:

Information in this document is provided solely in connection with ST products. STMicroelectronics NV and its subsidiaries (“ST”) reserve the right to make changes, corrections, modifications or improvements, to this document, and the products and services described herein at any time, without notice.

All ST products are sold pursuant to ST’s terms and conditions of sale.

Purchasers are solely responsible for the choice, selection and use of the ST products and services described herein, and ST assumes no liability whatsoever relating to the choice, selection or use of the ST products and services described herein.

No license, express or implied, by estoppel or otherwise, to any intellectual property rights is granted under this document. If any part of this document refers to any third party products or services it shall not be deemed a license grant by ST for the use of such third party products or services, or any intellectual property contained therein or considered as a warranty covering the use in any manner whatsoever of such third party products or services or any intellectual property contained therein.

UNLESS OTHERWISE SET FORTH IN ST’S TERMS AND CONDITIONS OF SALE ST DISCLAIMS ANY EXPRESS OR IMPLIED WARRANTY WITH RESPECT TO THE USE AND/OR SALE OF ST PRODUCTS INCLUDING WITHOUT LIMITATION IMPLIED WARRANTIES OF MERCHANTABILITY, FITNESS FOR A PARTICULAR PURPOSE (AND THEIR EQUIVALENTS UNDER THE LAWS OF ANY JURISDICTION), OR INFRINGEMENT OF ANY PATENT, COPYRIGHT OR OTHER INTELLECTUAL PROPERTY RIGHT.

UNLESS EXPRESSLY APPROVED IN WRITING BY AN AUTHORIZED ST REPRESENTATIVE, ST PRODUCTS ARE NOT RECOMMENDED, AUTHORIZED OR WARRANTED FOR USE IN MILITARY, AIR CRAFT, SPACE, LIFE SAVING, OR LIFE SUSTAINING APPLICATIONS, NOR IN PRODUCTS OR SYSTEMS WHERE FAILURE OR MALFUNCTION MAY RESULT IN PERSONAL INJURY, DEATH, OR SEVERE PROPERTY OR ENVIRONMENTAL DAMAGE. ST PRODUCTS WHICH ARE NOT SPECIFIED AS "AUTOMOTIVE GRADE" MAY ONLY BE USED IN AUTOMOTIVE APPLICATIONS AT USER’S OWN RISK.

Resale of ST products with provisions different from the statements and/or technical features set forth in this document shall immediately void any warranty granted by ST for the ST product or service described herein and shall not create or extend in any manner whatsoever, any liability of ST.

ST and the ST logo are trademarks or registered trademarks of ST in various countries.

Information in this document supersedes and replaces all information previously supplied.

The ST logo is a registered trademark of STMicroelectronics. All other names are the property of their respective owners.

© 2008 STMicroelectronics - All rights reserved

STMicroelectronics group of companies

Australia - Belgium - Brazil - Canada - China - Czech Republic - Finland - France - Germany - Hong Kong - India - Israel - Italy - Japan - Malaysia - Malta - Morocco - Singapore - Spain - Sweden - Switzerland - United Kingdom - United States of America

www.st.com