# STPS20M100S

Datasheet

## 100 V, 20 A power Schottky rectifier

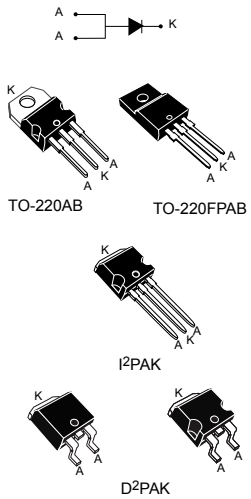


### Features

- Low forward voltage drop meaning very small conduction losses
- Avalanche rated
- Low frequency operation
- Insulated package TO-220FPAB:
  - Insulating voltage = 2000 $V_{RMS}$ sine
- ECOPACK®2 compliant component for D²PAK on demand

### Applications

- Switching diode
- SMPS
- DC/DC converter
- LED lighting
- Adapter for notebook and game station

### Description

This single Schottky rectifier is suited for high frequency switch mode power supply.

Packaged in TO-220AB, TO-220FPAB, D²PAK and I²PAK, the STPS20M100S is intended to be used in notebook, game station and desktop adaptors, providing in these applications a good efficiency at both low and high load.

| Product status link |
|---|
| STPS20M100S |

| Product summary | |
|---|---|
| $I_{F(AV)}$ | 20 A |
| $V_{RRM}$ | 100 V |
| $V_F$ (typ.) | 0.61 V |
| $T_j$ (max.) | 150 °C |

# 1 Characteristics

**Table 1. Absolute ratings (limiting values with anode terminals short circuited, at 25 °C unless otherwise specified)**

| Symbol | Parameter | | | Value | Unit |
|---|---|---|---|---|---|
| $V_{RRM}$ | Repetitive peak reverse voltage | | | 100 | V |
| $I_{F(RMS)}$ | Forward rms current | | | 30 | A |
| $I_{F(AV)}$ | Average forward current δ = 0.5, square wave | TO-220AB<br>D²PAK<br>I²PAK | $T_C$ = 130 °C | 20 | A |
| | | TO-220FPAB | $T_C$ = 85 °C | | |
| $I_{FSM}$ | Surge non repetitive forward current | | $t_p$ = 10 ms sinusoidal | 350 | A |
| $P_{ARM}$ | Repetitive peak avalanche power | | $t_p$ = 10 µs, $T_j$ = 125 °C | 1150 | W |
| $T_{stg}$ | Storage temperature range | | | -65 to +175 | °C |
| $T_j$ | Maximum operating junction temperature (1) | | | +150 | °C |

1. *$(dP_{tot}/dT_j) < (1/R_{th(j-a)})$ condition to avoid thermal runaway for a diode on its own heatsink.*

**Table 2. Thermal resistance parameter**

| Symbol | Parameter | | Value | Unit |
|---|---|---|---|---|
| $R_{th(j-c)}$ | Junction to case | TO-220AB, D²PAK, I²PAK | 1.2 | °C/W |
| | | TO-220FPAB | 4 | |

For more information, please refer to the following application note :

- AN5088 : Rectifiers thermal management, handling and mounting recommendations

**Table 3. Static electrical characteristics (anode terminals short circuited)**

| Symbol | Parameter | Test conditions | | Min. | Typ. | Max. | Unit |
|---|---|---|---|---|---|---|---|
| $I_R$ (1) | Reverse leakage current | $T_j$ = 25 °C | $V_R$ = 70 V | - | 5 | | µA |
| | | $T_j$ = 125 °C | | - | 5 | | mA |
| | | $T_j$ = 25 °C | $V_R$ = 100 V | - | 10 | 40 | µA |
| | | $T_j$ = 125 °C | | - | 10 | 40 | mA |
| $V_F$ (2) | Forward voltage drop | $T_j$ = 25 °C | $I_F$ = 5 A | - | 550 | | mV |
| | | $T_j$ = 125 °C | | - | 455 | | |
| | | $T_j$ = 25 °C | $I_F$ = 10 A | - | 660 | 730 | |
| | | $T_j$ = 125 °C | | - | 530 | 600 | |
| | | $T_j$ = 25 °C | $I_F$ = 20 A | - | 775 | 850 | |
| | | $T_j$ = 125 °C | | - | 610 | 690 | |

1. *Pulse test: $t_p$ = 5 ms, δ < 2%*
2. *Pulse test: $t_p$ = 380 µs, δ < 2%*

To evaluate the conduction losses, use the following equation:

$P = 0.425 \times I_{F(AV)} + 0.0088 \times I_F{}^2{}_{(RMS)}$

For more information, please refer to the following application notes related to the power losses :

- AN604: Calculation of conduction losses in a power rectifier
- AN4021: Calculation of reverse losses on a power diode

## 1.1 Characteristics (curves)

**Figure 1. Average forward power dissipation versus average forward current (anode terminals short circuited)**

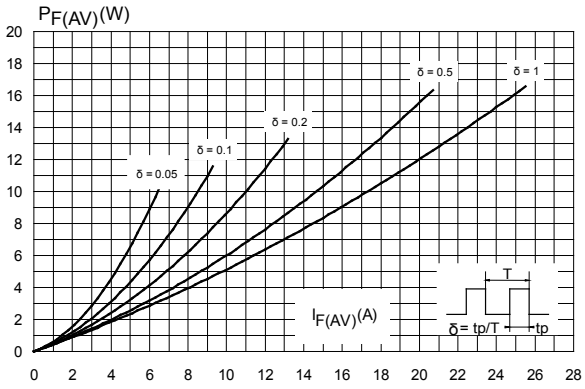


**Figure 2. Average forward current versus ambient temperature (δ = 0.5, anode terminals short circuited)**

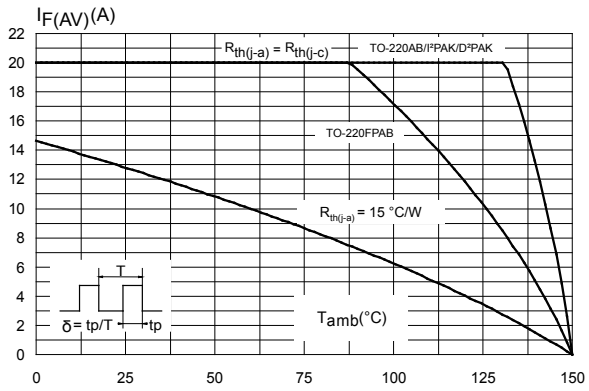


**Figure 3. Normalized avalanche power derating versus pulse duration ($T_j$ = 125 °C)**

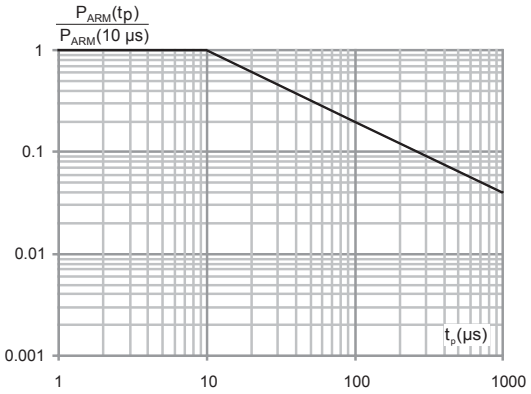


**Figure 4. Reverse leakage current versus reverse voltage applied (typical values)**

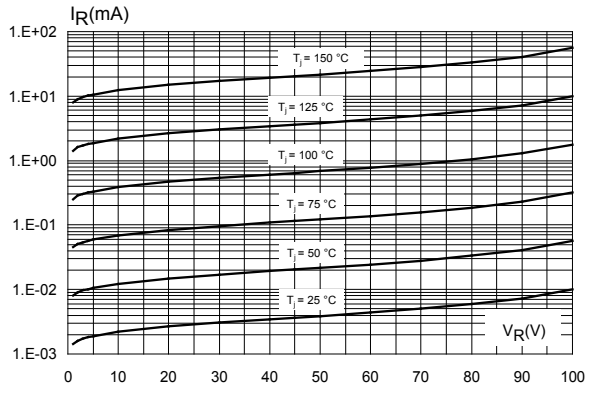

**Figure 5. Relative variation of thermal impedance junction to case versus pulse duration (TO-220AB, D²PAK, I²PAK)**

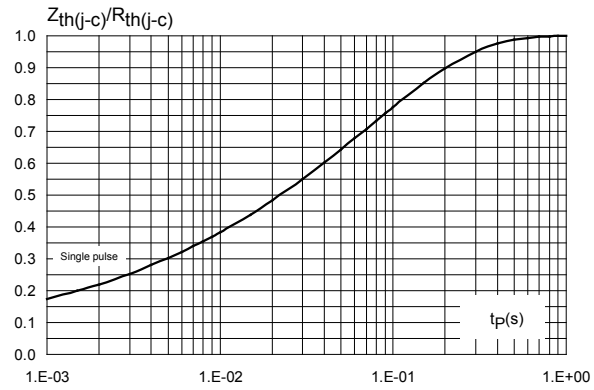


**Figure 6. Relative variation of thermal impedance junction to case versus pulse duration (TO-220FPAB)**

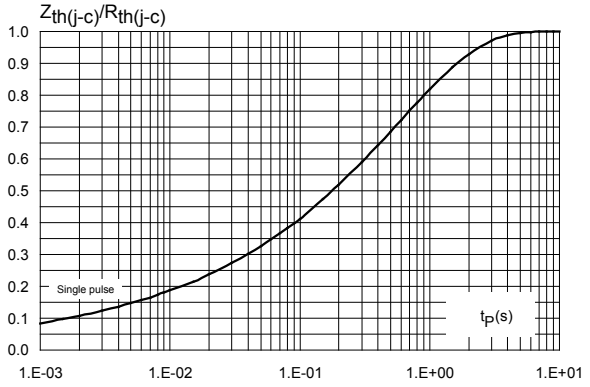


**Figure 7. Junction capacitance versus reverse voltage applied (typical values)**

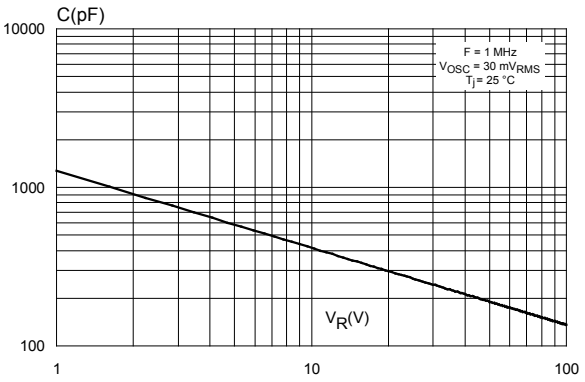


**Figure 8. Forward voltage drop versus forward current (anode terminals short circuited)**

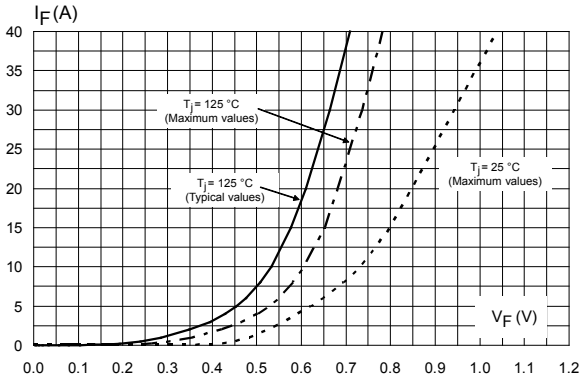


**Figure 9. Thermal resistance junction to ambient versus copper surface under tab for D²PAK**

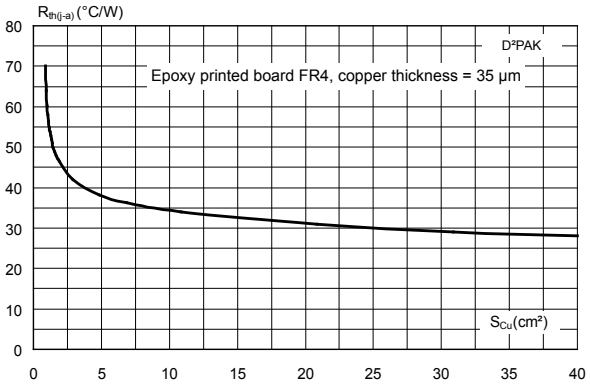

# 2 Package information

In order to meet environmental requirements, ST offers these devices in different grades of ECOPACK® packages, depending on their level of environmental compliance. ECOPACK® specifications, grade definitions and product status are available at: www.st.com. ECOPACK® is an ST trademark.

## 2.1 TO-220AB package information

- Epoxy meets UL 94,V0
- Cooling method: by conduction (C)
- Recommended torque value: 0.55 N·m
- Maximum torque value: 0.70 N·m

**Figure 10. TO-220AB package outline**

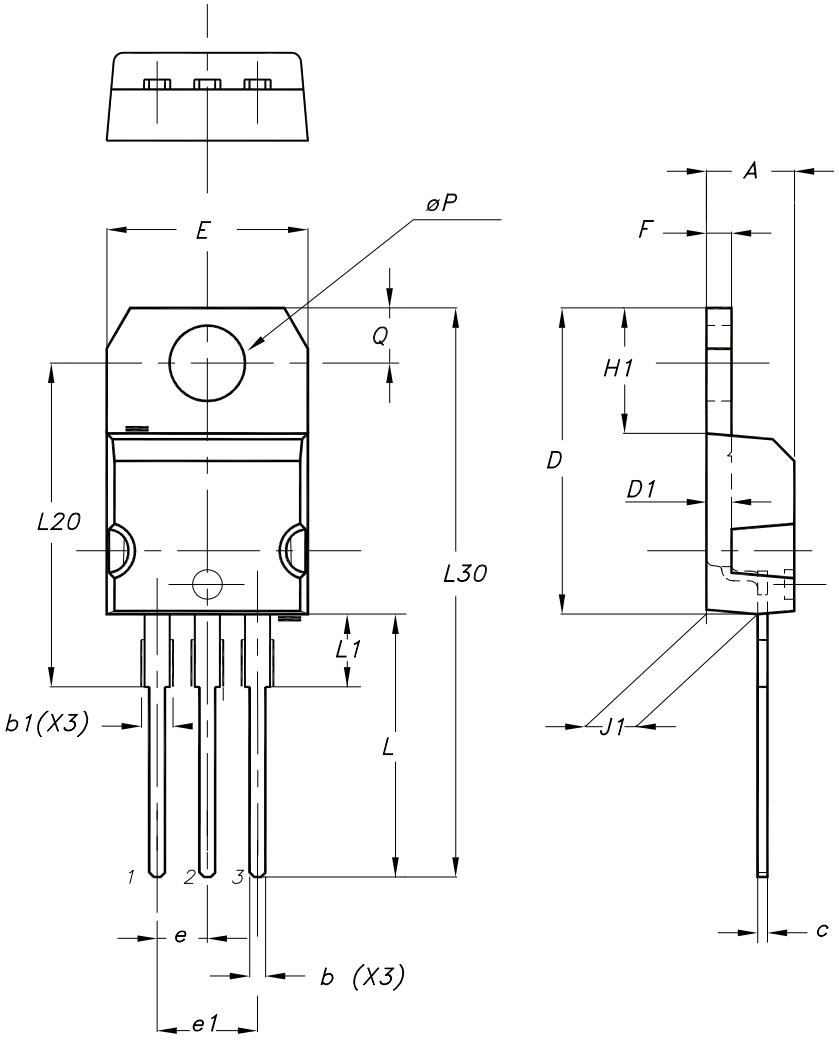

**Table 4. TO-220AB package mechanical data**

| Ref. | Dimensions | | | |
|---|---|---|---|---|
| | Millimeters | | Inches (for reference only) | |
| | Min. | Max. | Min. | Max. |
| A | 4.40 | 4.60 | 0.173 | 0.181 |
| b | 0.61 | 0.88 | 0.240 | 0.035 |
| b1 | 1.14 | 1.55 | 0.045 | 0.061 |
| c | 0.48 | 0.70 | 0.019 | 0.028 |
| D | 15.25 | 15.75 | 0.600 | 0.620 |
| D1 | 1.27 typ. | | 0.050 typ. | |
| E | 10.00 | 10.40 | 0.394 | 0.409 |
| e | 2.40 | 2.70 | 0.094 | 0.106 |
| e1 | 4.95 | 5.15 | 0.195 | 0.203 |
| F | 1.23 | 1.32 | 0.048 | 0.052 |
| H1 | 6.20 | 6.60 | 0.244 | 0.260 |
| J1 | 2.40 | 2.72 | 0.094 | 0.107 |
| L | 13.00 | 14.00 | 0.512 | 0.551 |
| L1 | 3.50 | 3.93 | 0.138 | 0.155 |
| L20 | 16.40 typ. | | 0.646 typ. | |
| L30 | 28.90 typ. | | 1.138 typ. | |
| θP | 3.75 | 3.85 | 0.148 | 0.152 |
| Q | 2.65 | 2.95 | 0.104 | 0.116 |

## 2.2 TO-220FPAB package information

- Epoxy meets UL 94,V0
- Cooling method: by conduction (C)
- Recommended torque value: 0.55 N·m
- Maximum torque value: 0.70 N·m

**Figure 11. TO-220FPAB package outline**

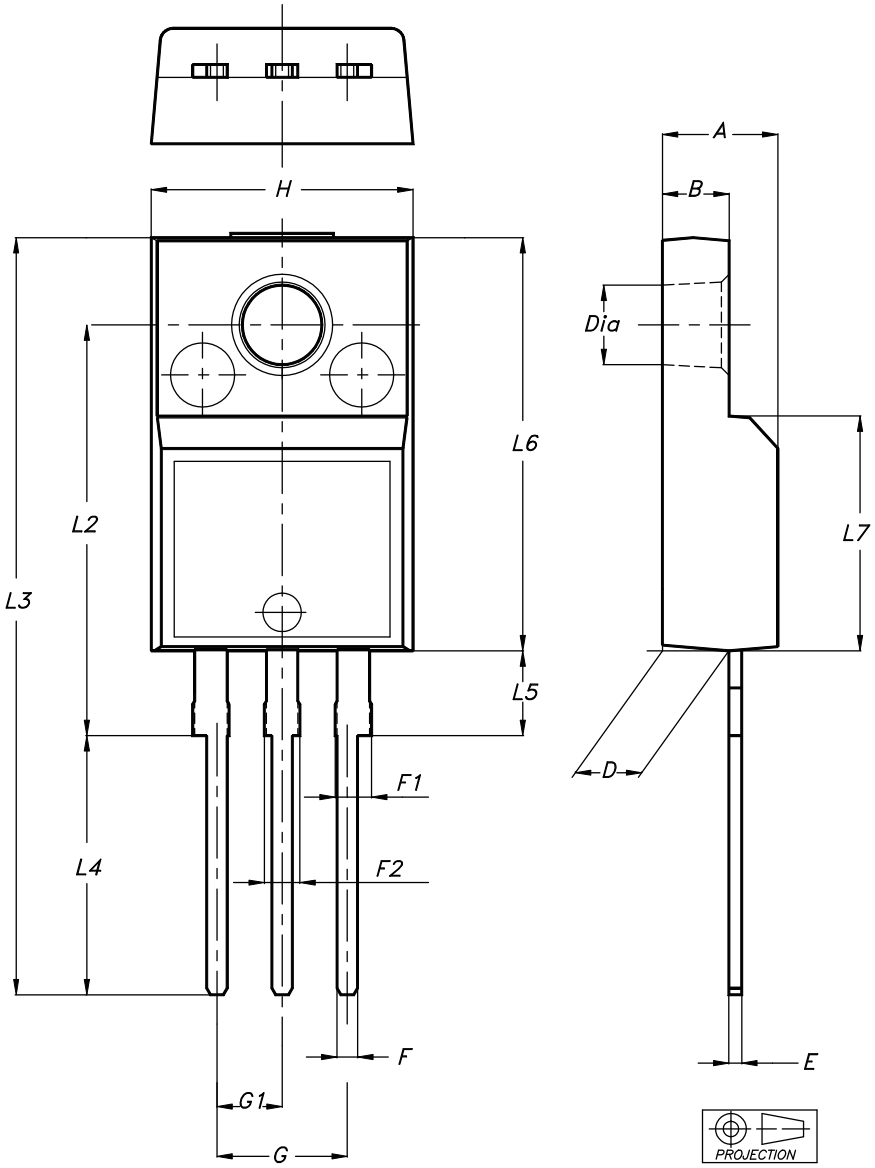

Table 5. **TO-220FPAB package mechanical data**

| Ref. | Dimensions | | | |
|---|---|---|---|---|
| | Millimeters | | Inches (for reference only) | |
| | Min. | Max. | Min. | Max. |
| A | 4.40 | 4.60 | 0.1739 | 0.1818 |
| B | 2.50 | 2.70 | 0.0988 | 0.1067 |
| D | 2.50 | 2.75 | 0.0988 | 0.1087 |
| E | 0.45 | 0.70 | 0.0178 | 0.0277 |
| F | 0.75 | 1.00 | 0.0296 | 0.0395 |
| F1 | 1.15 | 1.70 | 0.0455 | 0.0672 |
| F2 | 1.15 | 1.70 | 0.0455 | 0.0672 |
| G | 4.95 | 5.20 | 0.1957 | 0.2055 |
| G1 | 2.40 | 2.70 | 0.0949 | 0.1067 |
| H | 10.00 | 10.40 | 0.3953 | 0.4111 |
| L2 | 16.00 typ. | | 0.6324 typ. | |
| L3 | 28.60 | 30.60 | 1.1304 | 1.2095 |
| L4 | 9.80 | 10.60 | 0.3874 | 0.4190 |
| L5 | 2.90 | 3.60 | 0.1146 | 0.1423 |
| L6 | 15.90 | 16.40 | 0.6285 | 0.6482 |
| L7 | 9.00 | 9.30 | 0.3557 | 0.3676 |
| Dia | 3.00 | 3.20 | 0.1186 | 0.1265 |

## 2.3 I²PAK package information

- Epoxy meets UL 94,V0
- Cooling method: by conduction (C)

Figure 12. I²PAK package outline

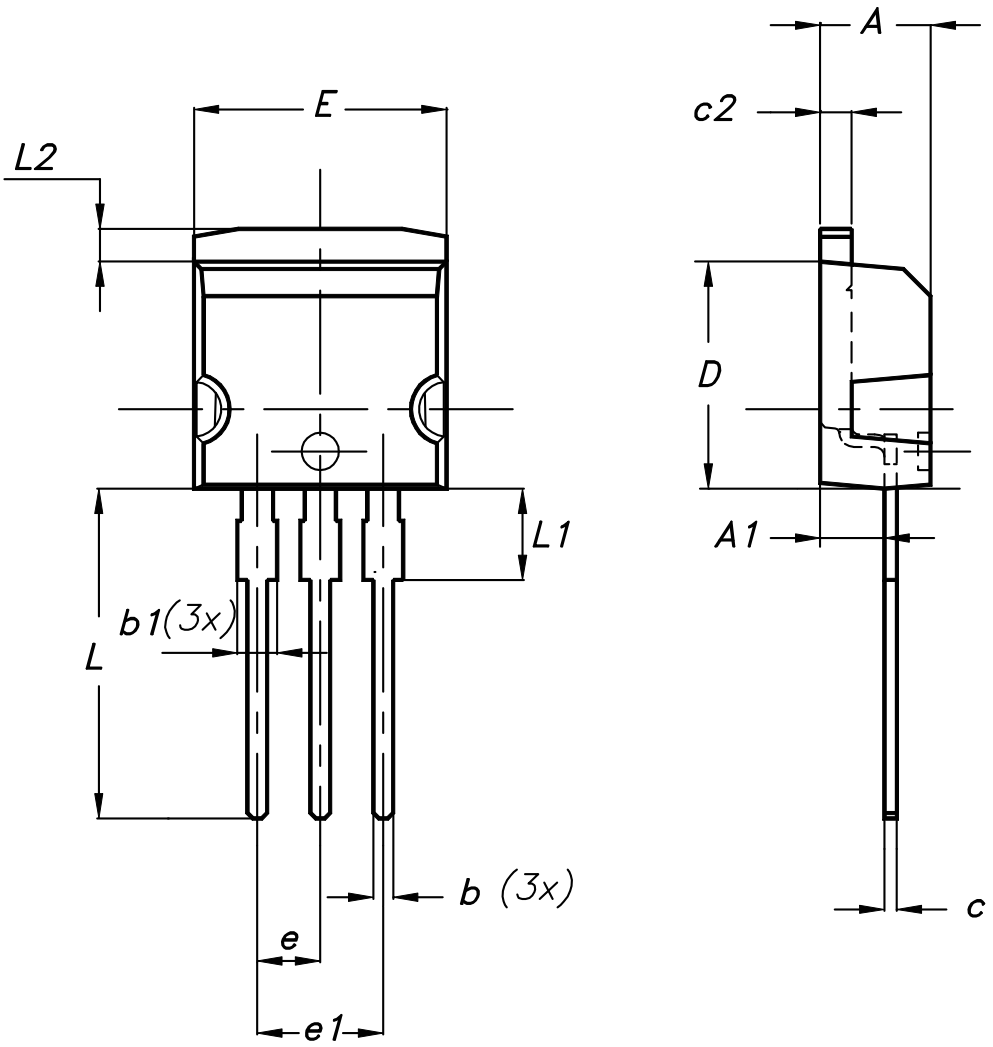

Table 6. I²PAK package mechanical data

| Ref. | Dimensions | | | |
|---|---|---|---|---|
| | Millimeters | | Inches (for reference only) | |
| | Min. | Max. | Min. | Max. |
| A | 4.40 | 4.60 | 0.173 | 0.181 |
| A1 | 2.40 | 2.72 | 0.094 | 0.107 |
| b | 0.61 | 0.88 | 0.024 | 0.035 |
| b1 | 1.14 | 1.70 | 0.044 | 0.067 |
| c | 0.49 | 0.70 | 0.019 | 0.028 |
| c2 | 1.23 | 1.32 | 0.048 | 0.052 |
| D | 8.95 | 9.35 | 0.352 | 0.368 |
| e | 2.40 | 2.70 | 0.094 | 0.106 |
| e1 | 4.95 | 5.15 | 0.195 | 0.203 |
| E | 10.00 | 10.40 | 0.394 | 0.409 |
| L | 13.00 | 14.00 | 0.512 | 0.551 |
| L1 | 3.50 | 3.93 | 0.138 | 0.155 |
| L2 | 1.27 | 1.40 | 0.050 | 0.055 |

## 2.4 D²PAK package information

- Epoxy meets UL94, V0
- Cooling method: by conduction (C)

Figure 13. **D²PAK package outline**

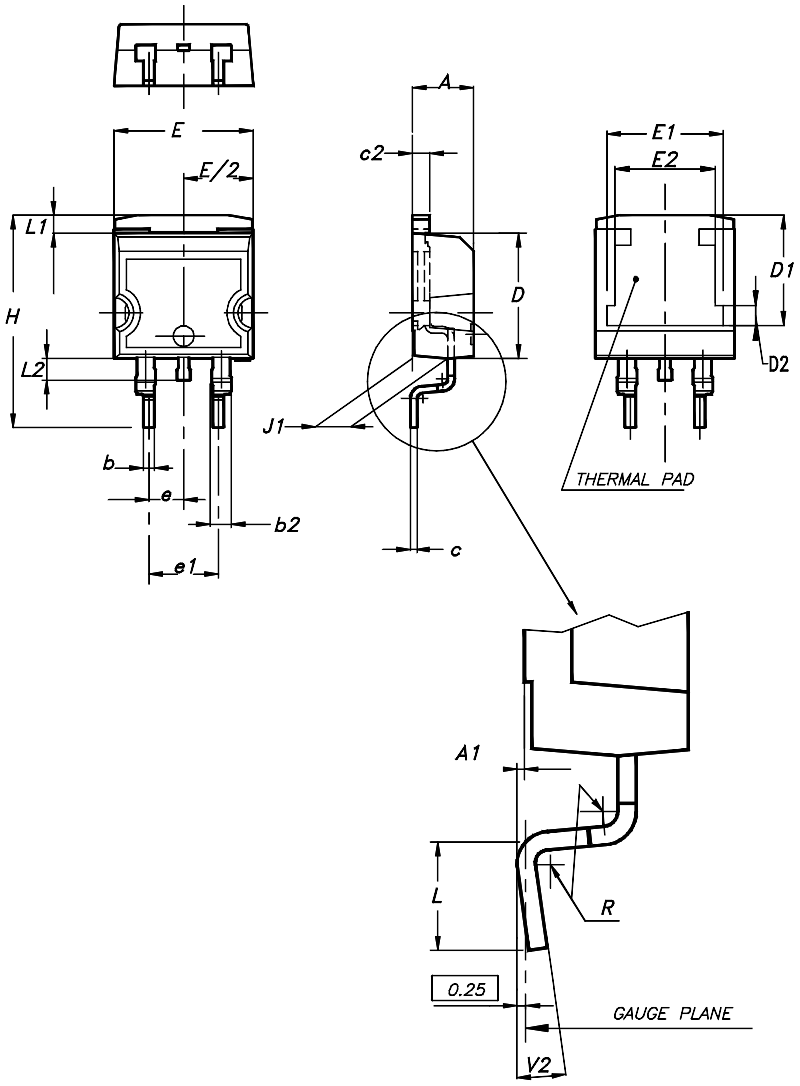


*Note: This package drawing may slightly differ from the physical package. However, all the specified dimensions are guaranteed.*

Table 7. **D²PAK package mechanical data**

| Ref. | Dimensions | | | |
|---|---|---|---|---|
| | Millimeters | | Inches (for reference only) | |
| | Min. | Max. | Min. | Max. |
| A | 4.36 | 4.60 | 0.172 | 0.181 |
| A1 | 0.00 | 0.25 | 0.000 | 0.010 |
| b | 0.70 | 0.93 | 0.028 | 0.037 |
| b2 | 1.14 | 1.70 | 0.045 | 0.067 |
| c | 0.38 | 0.69 | 0.015 | 0.027 |
| c2 | 1.19 | 1.36 | 0.047 | 0.053 |
| D | 8.60 | 9.35 | 0.339 | 0.368 |
| D1 | 6.90 | 8.00 | 0.272 | 0.311 |
| D2 | 1.10 | 1.50 | 0.043 | 0.060 |
| E | 10.00 | 10.55 | 0.394 | 0.415 |
| E1 | 8.10 | 8.90 | 0.319 | 0.346 |
| E2 | 6.85 | 7.25 | 0.266 | 0.282 |
| e | 2.54 typ. | | 0.100 | |
| e1 | 4.88 | 5.28 | 0.190 | 0.205 |
| H | 15.00 | 15.85 | 0.591 | 0.624 |
| J1 | 2.49 | 2.90 | 0.097 | 0.112 |
| L | 1.90 | 2.79 | 0.075 | 0.110 |
| L1 | 1.27 | 1.65 | 0.049 | 0.065 |
| L2 | 1.30 | 1.78 | 0.050 | 0.070 |
| R | 0.4 typ. | | 0.015 | |
| V2 | 0° | 8° | 0° | 8° |

Figure 14. **D²PAK recommended footprint (dimensions in mm)**

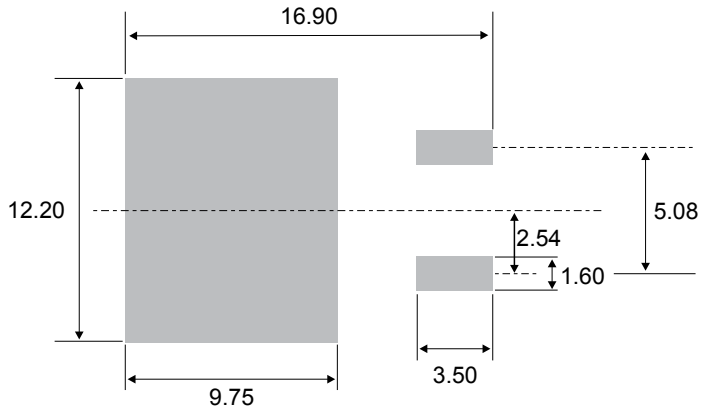

# 3 Ordering information

Table 8. **Ordering information**

| Order code | Marking | Package | Weight | Base qty. | Delivery mode |
|---|---|---|---|---|---|
| STPS20M100ST | PS20M100ST | TO-220AB | 1.95 g | 50 | Tube |
| STPS20M100SFP | PS20M100SFP | TO-220FPAB | 1.90 g | 50 | Tube |
| STPS20M100SR | PS20M100SR | I²PAK | 1.50 g | 50 | Tube |
| STPS20M100SG-TR | PS20M100SG | D²PAK | 1.48 g | 1000 | Tape and reel |

## Revision history

**Table 9. Document revision history**

| Date | Version | Changes |
|---|---|---|
| 25-Mar-2009 | 1 | First issue. |
| 16-Apr-2010 | 2 | Updated package graphic for TO-220AB on front page and in Table 5. |
| 24-May-2016 | 3 | Updated cover page.<br>Complete Characteristics section update.<br>Updated Section 2.4: "D²PAK package information" and Table 9: "Ordering information". |
| 28-Sep-2018 | 4 | Updated cover page, Table 1. Absolute ratings (limiting values with anode terminals short circuited, at 25 °C unless otherwise specified) and Table 8. Ordering information.<br>Removed figure 1 and figure 11.<br>Minor text changes to improve readability. |
| 18-Feb-2019 | 5 | Updated Table 1. |

**IMPORTANT NOTICE – PLEASE READ CAREFULLY**

STMicroelectronics NV and its subsidiaries (“ST”) reserve the right to make changes, corrections, enhancements, modifications, and improvements to ST products and/or to this document at any time without notice. Purchasers should obtain the latest relevant information on ST products before placing orders. ST products are sold pursuant to ST’s terms and conditions of sale in place at the time of order acknowledgement.

Purchasers are solely responsible for the choice, selection, and use of ST products and ST assumes no liability for application assistance or the design of Purchasers’ products.

No license, express or implied, to any intellectual property right is granted by ST herein.

Resale of ST products with provisions different from the information set forth herein shall void any warranty granted by ST for such product.

ST and the ST logo are trademarks of ST. All other product or service names are the property of their respective owners.

Information in this document supersedes and replaces information previously supplied in any prior versions of this document.

© 2019 STMicroelectronics – All rights reserved