STN9260

High voltage fast-switching PNP power transistor

Features

- High voltage capability
- Fast switching speed

Applications

- Lighting
- Switch mode power supply

Description

This device is a high voltage fast-switching PNP power transistor. It is manufactured using high voltage multi epitaxial planar technology for high switching speeds and medium voltage capability. It uses a cellular emitter structure with planar edge termination to enhance switching speeds while maintaining a wide RBSOA. The device is designed for use in lighting applications and low cost switch-mode power supplies.

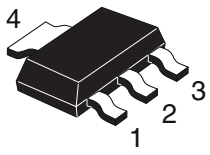

SOT-223

Figure 1. Internal schematic diagram

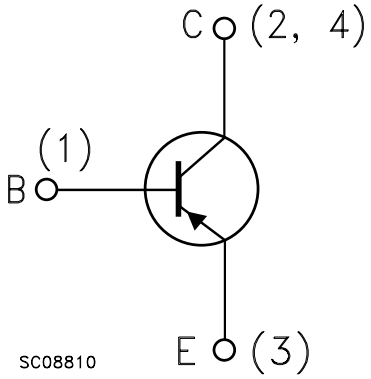

Table 1. Device summary

Part number	Marking	Package	Packaging
STN9260	N9260	SOT-223	Tape and reel

1 Electrical ratings

Table 2. Absolute maximum ratings

Symbol	Parameter	Value	Unit
V_{CES}	Collector-emitter voltage (V_{BE} = 0)	-600	V
V_{CEO}	Collector-emitter voltage (I_B = 0)	-600	V
V_{EBO}	Emitter-base voltage (I_C = 0)	-7	V
I_C	Collector current	-0.5	A
I_{CM}	Collector peak current (t_P < 5 ms)	-1	A
I_B	Base current	-0.25	A
I_{BM}	Base peak current (t_P < 5 ms)	-0.5	A
P_{TOT}	Total dissipation at T_a = 25 °C	1.6	W
T_{STG}	Storage temperature	-65 to 150	°C
T_J	Max. operating junction temperature	150	°C

Table 3. Thermal data

Symbol	Parameter		Value	Unit
R_{thJA}	Thermal resistance junction-ambient (1)	max	78	°C/W

1. Device mounted on PCB area of 1 cm².

2 Electrical characteristics

T_{case} = 25 °C unless otherwise specified.

Table 4. Electrical characteristics

Symbol	Parameter	Test conditions	Min.	Typ.	Max.	Unit
I_{CES}	Collector cut-off current (V_{BE} = 0)	V_{CE} = -600 V			-10	µA
I_{EBO}	Emitter cut-off current (I_C = 0)	V_{EB} = -7 V			-1	µA
$V_{CE(sus)}$ (1)	Collector-emitter sustaining voltage (I_B = 0)	I_C = -10 mA	-600			V
$V_{CE(sat)}$ (1)	Collector-emitter saturation voltage	I_C = -100 mA I_B = -10 mA			-1	V
$V_{BE(sat)}$ (1)	Base-emitter saturation voltage	I_C = -100 mA I_B = -10 mA			-1	V
h_{FE}	DC current gain	I_C = -10 mA V_{CE} = -5 V I_C = -20 mA V_{CE} = -5 V	50	140		
	Resistive load					
t_r	Rise time	V_{CC}=-200 V, I_C=-0.1 A		200		ns
t_s	Storage time	I_{B1}=-10 mA, I_{B2}=20 mA		3.2		µs
t_f	Fall time	T_p=30 µs		150		ns

1. Pulse test: pulse duration ≤ 300 µs, duty cycle ≤ 2 %.

2.1 Electrical characteristics (curves)

Figure 2. Safe operating area

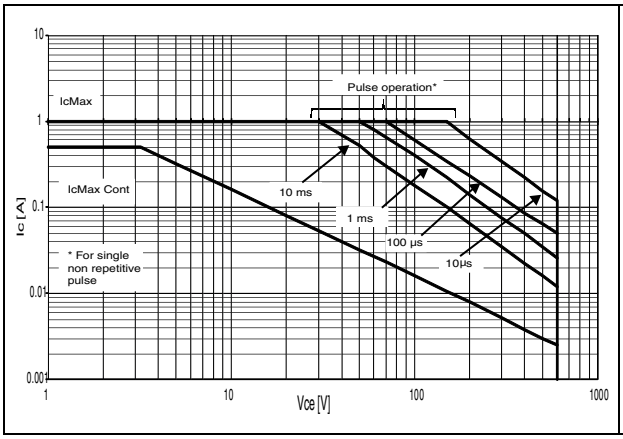

Figure 3. Derating curve

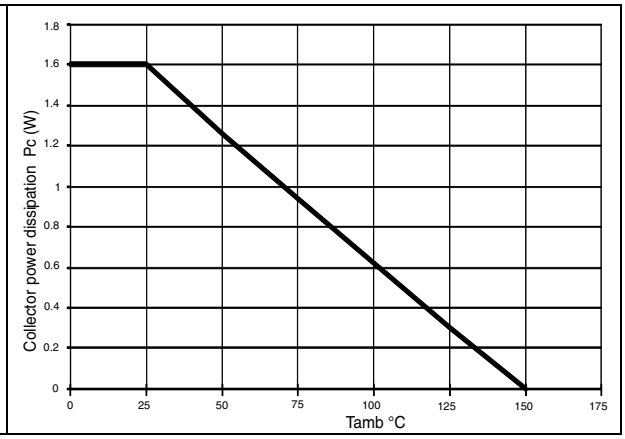

Figure 4. Output curves up to V_{CE}= -1 V

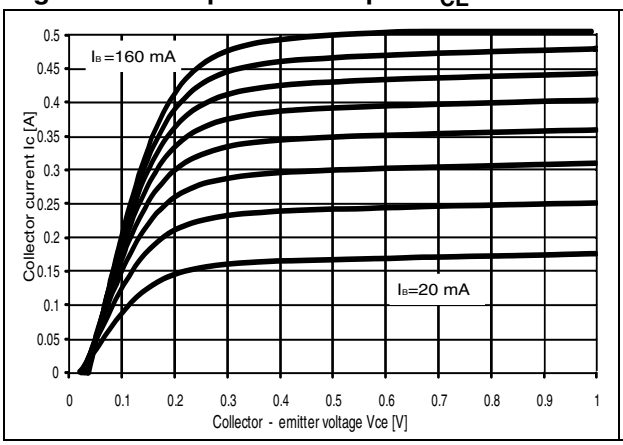

Figure 5. Output curves up to V_{CE}= -2 V

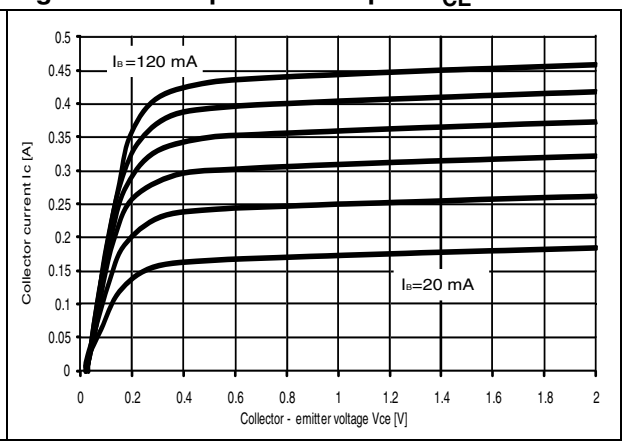

Figure 6. DC current gain (V_{CE} = -1 V)

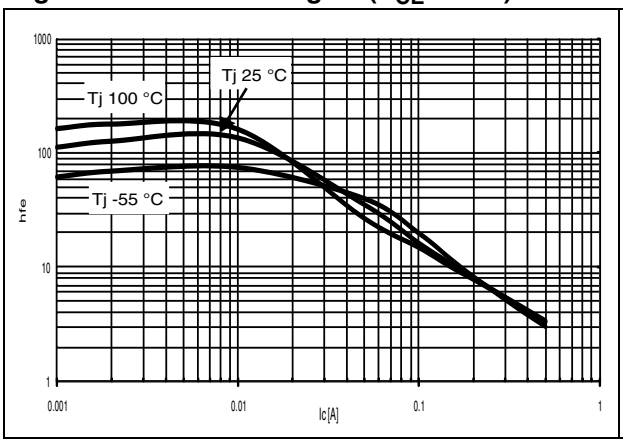

Figure 7. DC current gain (V_{CE} = -5 V)

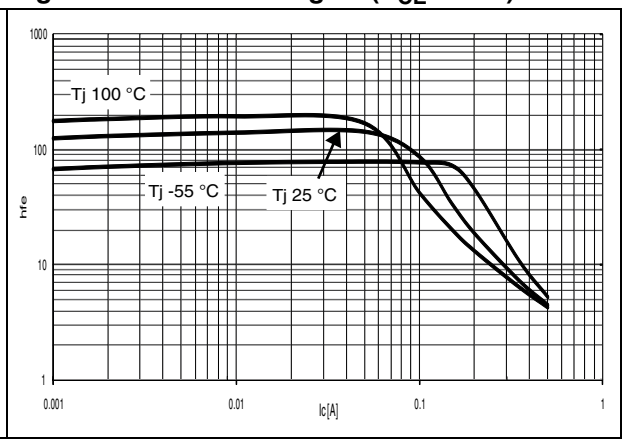

Figure 8. Collector-emitter saturation voltage

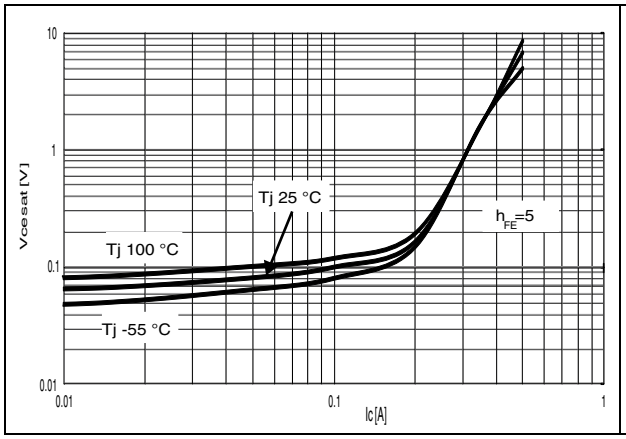

Figure 9. Base-emitter saturation voltage

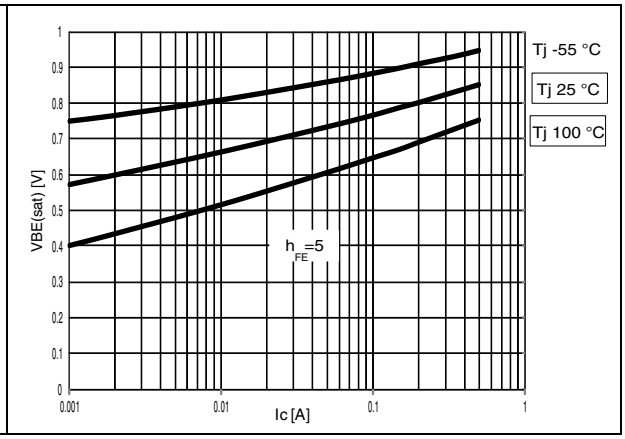

Figure 10. Base-emitter on voltage

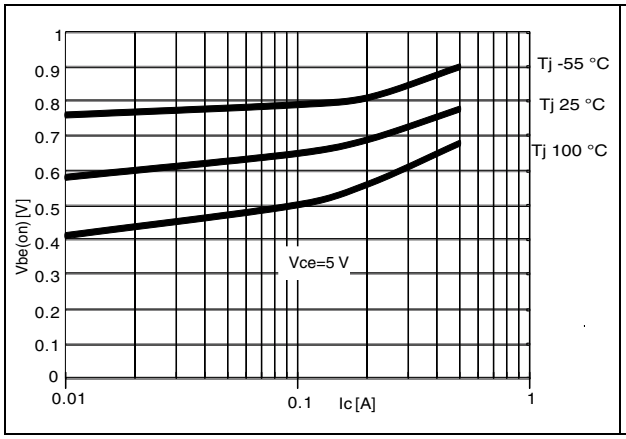

Figure 11. Capacitance variation

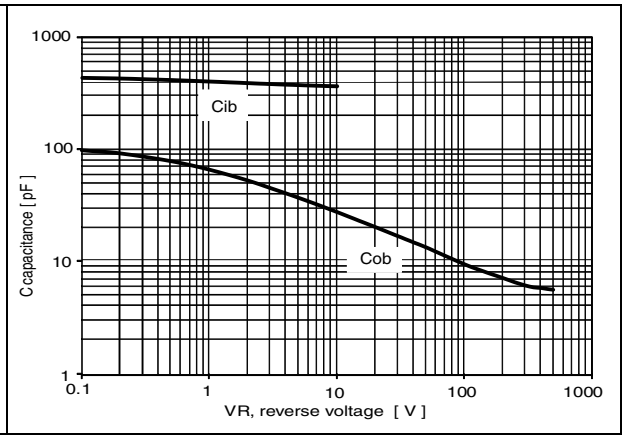

Figure 12. Reverse biased safe operating area

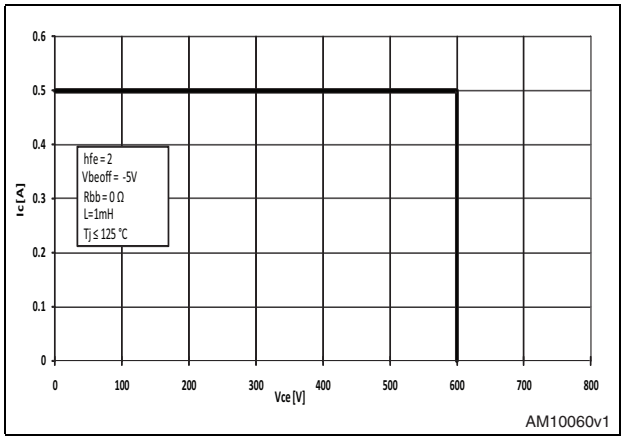

2.2 Test circuits

Figure 13. Resistive load switching test circuit

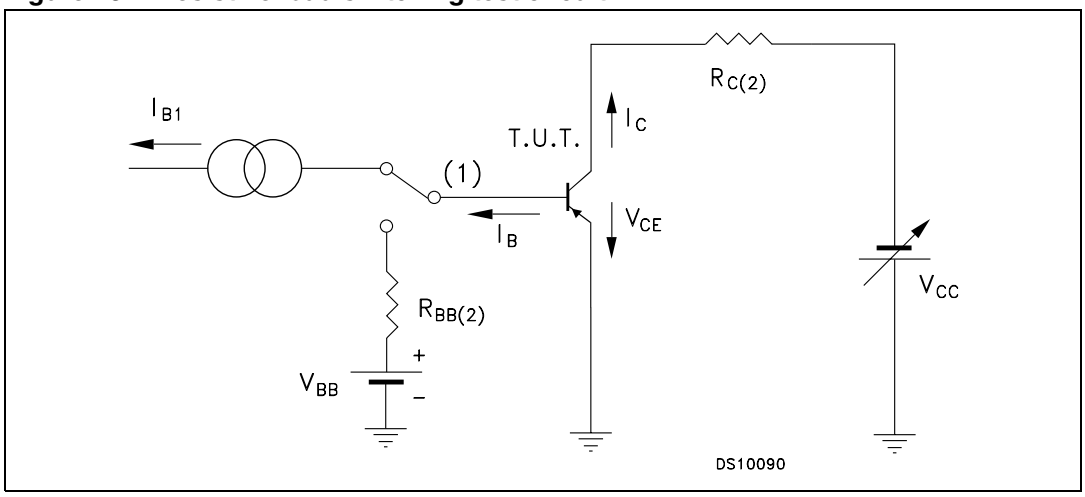

1. Fast electronic switching
2. Non-inductive resistor

3 Package mechanical data

In order to meet environmental requirements, ST offers these devices in different grades of ECOPACK® packages, depending on their level of environmental compliance. ECOPACK® specifications, grade definitions and product status are available at: *www.st.com*.
ECOPACK® is an ST trademark.

Dim.	mm		
	Min.	Typ.	Max.
A			1.80
A1	0.02		0.1
B	0.60	0.70	0.85
B1	2.90	3.00	3.15
c	0.24	0.26	0.35
D	6.30	6.50	6.70
e		2.30	
e1		4.60	
E	3.30	3.50	3.70
H	6.70	7.00	7.30
V			10°

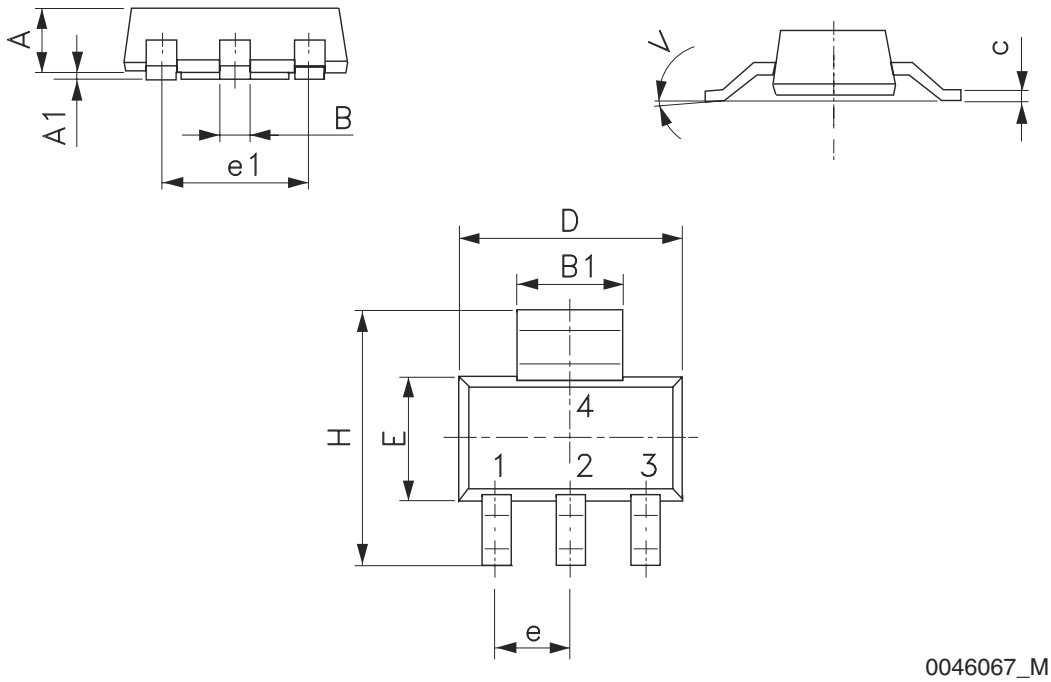

4 Revision history

Table 6. Document revision history

Date	Revision	Changes
13-Dec-2010	1	Initial release.
03-Aug-2011	2	– Curves inserted – Minor text changes

Please Read Carefully:

Information in this document is provided solely in connection with ST products. STMicroelectronics NV and its subsidiaries (“ST”) reserve the right to make changes, corrections, modifications or improvements, to this document, and the products and services described herein at any time, without notice.

All ST products are sold pursuant to ST’s terms and conditions of sale.

Purchasers are solely responsible for the choice, selection and use of the ST products and services described herein, and ST assumes no liability whatsoever relating to the choice, selection or use of the ST products and services described herein.

No license, express or implied, by estoppel or otherwise, to any intellectual property rights is granted under this document. If any part of this document refers to any third party products or services it shall not be deemed a license grant by ST for the use of such third party products or services, or any intellectual property contained therein or considered as a warranty covering the use in any manner whatsoever of such third party products or services or any intellectual property contained therein.

UNLESS OTHERWISE SET FORTH IN ST’S TERMS AND CONDITIONS OF SALE ST DISCLAIMS ANY EXPRESS OR IMPLIED WARRANTY WITH RESPECT TO THE USE AND/OR SALE OF ST PRODUCTS INCLUDING WITHOUT LIMITATION IMPLIED WARRANTIES OF MERCHANTABILITY, FITNESS FOR A PARTICULAR PURPOSE (AND THEIR EQUIVALENTS UNDER THE LAWS OF ANY JURISDICTION), OR INFRINGEMENT OF ANY PATENT, COPYRIGHT OR OTHER INTELLECTUAL PROPERTY RIGHT.

UNLESS EXPRESSLY APPROVED IN WRITING BY TWO AUTHORIZED ST REPRESENTATIVES, ST PRODUCTS ARE NOT RECOMMENDED, AUTHORIZED OR WARRANTED FOR USE IN MILITARY, AIR CRAFT, SPACE, LIFE SAVING, OR LIFE SUSTAINING APPLICATIONS, NOR IN PRODUCTS OR SYSTEMS WHERE FAILURE OR MALFUNCTION MAY RESULT IN PERSONAL INJURY, DEATH, OR SEVERE PROPERTY OR ENVIRONMENTAL DAMAGE. ST PRODUCTS WHICH ARE NOT SPECIFIED AS "AUTOMOTIVE GRADE" MAY ONLY BE USED IN AUTOMOTIVE APPLICATIONS AT USER’S OWN RISK.

Resale of ST products with provisions different from the statements and/or technical features set forth in this document shall immediately void any warranty granted by ST for the ST product or service described herein and shall not create or extend in any manner whatsoever, any liability of ST.

ST and the ST logo are trademarks or registered trademarks of ST in various countries.

Information in this document supersedes and replaces all information previously supplied.

The ST logo is a registered trademark of STMicroelectronics. All other names are the property of their respective owners.

© 2011 STMicroelectronics - All rights reserved

STMicroelectronics group of companies

Australia - Belgium - Brazil - Canada - China - Czech Republic - Finland - France - Germany - Hong Kong - India - Israel - Italy - Japan - Malaysia - Malta - Morocco - Philippines - Singapore - Spain - Sweden - Switzerland - United Kingdom - United States of America

www.st.com