STLA02

White LED driver for display backlight

Features

- Boost DC-DC converter
- Drives up to 6 LEDs with a total current up to 20 mA
- Output power capability up to 500 mW
- Input voltage range 2.5 V to 18 V
- Output current control
- 2.3 MHz switching frequency
- PWM input for the output current dimming with 300:1 dimming range
- 350 mA integrated switch
- Overvoltage protection
- Chip overtemperature detection and protection
- Soft-start implemented
- Package DFN6 2 x 2 mm

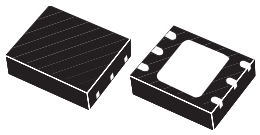

DFN6 (2 x 2 mm)

Applications

- PDA and handheld devices
- Cellular phones
- MP3 players

Description

STLA02 is a boost converter that operates from 2.5 V to 18 V and can provide an output voltage as high as 27 V and can drive up to 6 white LEDs connected in series. The total output current capability is 20 mA at an output voltage of 24 V. The total output power capability is up to 500 mW. The regulation is done by the internal error amplifier which works with the feedback voltage from the sensing resistor connected in high side sensing configuration. The device can be turned on/off by the logic signal connected to the EN pin and this pin is also dedicated for the PWM dimming of the output current. Current mode control of the regulation allows a fast response to a change of the enable pin voltage level.

Table 1. Device summary

Part number	Order code	Package
STLA02	STLA02PUR	DFN6 (2 x 2 mm)

Contents

1 Diagram 3

2 Pin configuration 4

3 Maximum ratings 5

4 Application 6

5 Electrical characteristics 7

6 Typical performance characteristics 8

7 Introduction 14

7.1 PWM input (EN) 14

7.2 Selection of the external components 14

8 Package mechanical data 18

9 Revision history 22

1 Diagram

Figure 1. Block diagram

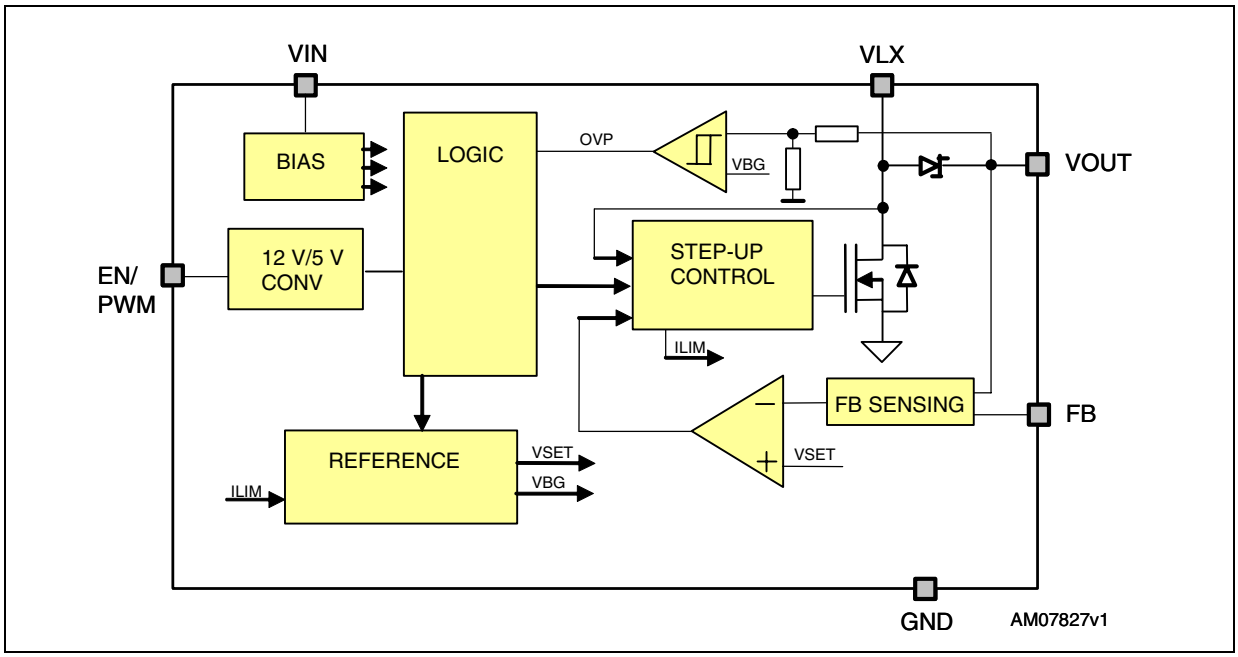

2 Pin configuration

Figure 2. Pin connections (top view)

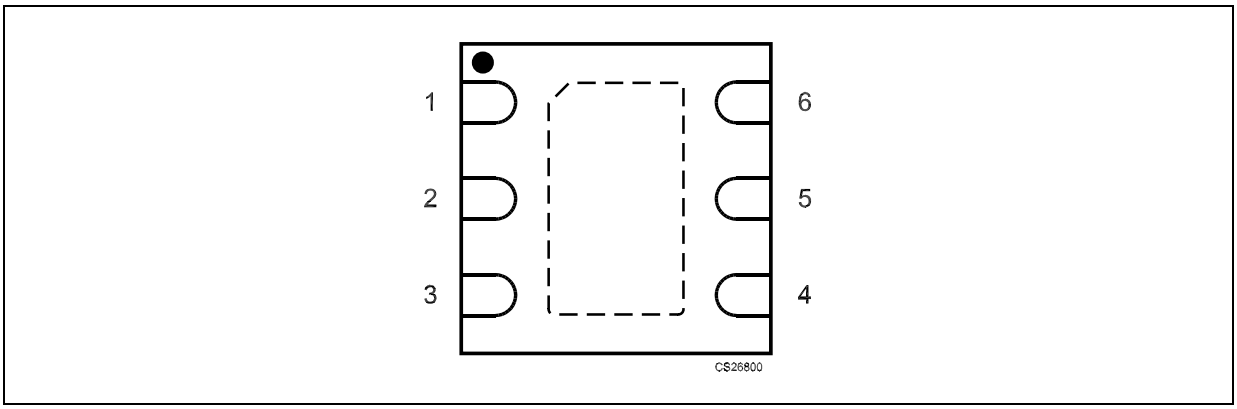

Table 2. Pin description

Pin n°	Symbol	Name and function
1	V_{IN}	Supply voltage pin
2	GND	Ground
3	LX	Switching pin
4	V_{OUT}	Output voltage pin
5	FB	Feedback voltage
6	EN/PWM	Enable pin or PWM control input for dimming
Exposed pad	GND	Ground

3 Maximum ratings

Table 3. Absolute maximum ratings

Symbol	Parameter	Value	Unit
V_{IN}	Signal supply voltage	- 0.3 to 19	V
V_{LX}	Inductor connection	- 0.3 to 30	V
FB	Feedback connection(1)	- 0.3 to 30	V
EN/PWM	Logic pin/PWM input	- 0.3 to 12	V
V_{OUT}	Output voltage connection	- 0.3 to 30	V
P_{TOT}	Continuous power dissipation (at T_A = 70 °C)(1)	530	mW
T_{OP}	Operating ambient temperature range	- 40 to 85	°C
T_J	Junction temperature	- 40 to 150	°C
T_{STG}	Storage temperature range	- 65 to 150	°C

1. The maximum acceptable difference between the V_{OUT} pin potential and feedback pin potential is 5 V.

Note: Absolute maximum ratings are those values beyond which damage to the device may occur. Functional operation under these conditions is not implied.

Table 4. Thermal data

Symbol	Parameter	Value	Unit
R_{thJA}	Thermal resistance junction-ambient (1)	102	°C/W

1. Power dissipation is dependent on PCB. The recommended PCB design is included in this document (TBD).

Table 5. ESD

Symbol	Parameter	Value	Unit
HBM	Human body model	2	kV
MM	Machine model	200	V

4 Application

Figure 3. Application schematic

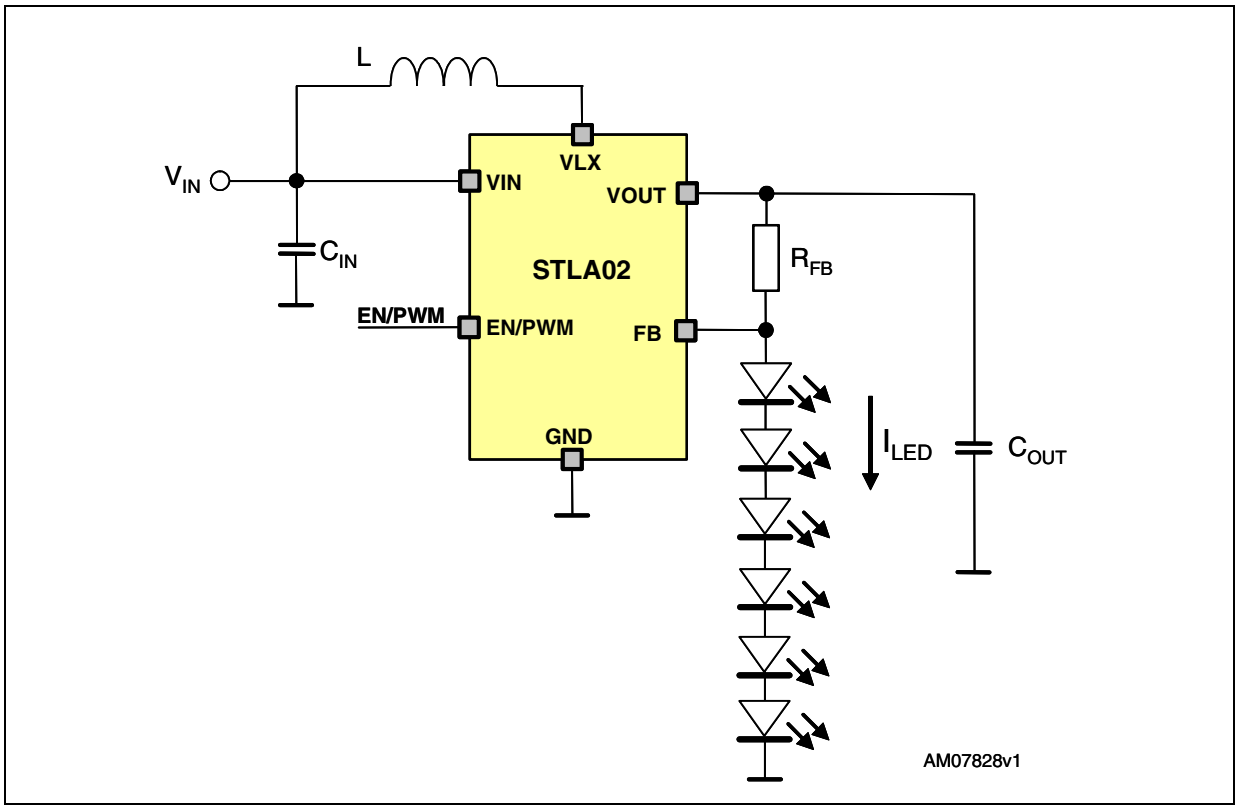

Table 6. List of external components

Component	Manufacturer	Part number	Value	Size
C_{IN}	MURATA	GRM216R61E105KA12	1 µF / 25 V	0805
C_{OUT}	MURATA	GRM216R61E105KA12	1 µF / 25 V	0805
L	MURATA	LQH3NPN100NJ0L	10 µH	3x3x0.9 mm
	TDK	VLF3012ST-100MR59	10 µH	3x2.8x1.2 mm
R_{FB}	TYCO	CPF0402B10RE	10 Ω	0402
LED	OSRAM	LWL283-Q1R2-3K8L-1-Z	20 mA / 3.1 V	0603

Note: Above listed components refer to a typical application with maximum performance settings. Operation of the STLA02 is not limited to the choice of these external components.

5 Electrical characteristics

$V_{EN} = V_{IN} = 3$ V $T_A = -40$ °C to 85 °C unless otherwise specified. Typical values are at $T_A = 25$ °C, unless otherwise specified.

Table 7. Electrical characteristics

Symbol	Parameter	Test conditions	Min.	Typ.	Max.	Unit
V_{IN}	Input operating supply voltage		2.5		18	V
I_S	Supply current	$V_{EN} = V_{IN}$, $V_{OUT} = 24$ V, $V_{FB} = 23$ V		2	4	mA
		V_{EN} = GND		10		µA
I_O	Output current adjustment	$V_{IN} = 2.5$ V to 18 V, $R_{FB} = 10$ Ω			20	mA
V_{OUT}	Regulated voltage range	$V_{IN} = 2.5$ V to 18 V	V_{IN}+1		27	V
I_{PEAK}	Inductor peak current	$V_{IN} = 2.5$ V	300	400	550	mA
V_{FB}	Feedback voltage (V_{OUT} - V_{FB})	$V_{EN} = V_{IN}$, $R_{FB} = 10$ Ω	190	200	210	mV
I_{FB}	FB bias current	$V_{EN} = V_{IN}$, $V_{OUT} = 24$ V, $V_{FB} = 24$ V		6		µA
$I_{LX(leak)}$	N-MOS leakage current	$V_{EN} = 0$, $V_{LX} = V_{OUT} = 24$ V			0.1	µA
ΔI_O	Output current tolerance	$V_{IN} = 3$ V, $I_{OUT} = 0.2$ V / R_{FB}	-5		5	%
f_s	Switching frequency	$V_{IN} = 2.5$ V, $T_A = 25$ °C	1.7	2	2.3	MHz
D_{MAX}	Maximum duty cycle	$V_{EN} = V_{IN}$, $V_{OUT} = 24$ V, $V_{FB} = 24$ V	88	92		%
R_{DSon}-N	Internal N-channel R_{DSon}	$I_{LX} = 20$ mA		0.8		Ω
ν	Efficiency of the chip itself	$V_{IN} = 10$ V, $I_O = 20$ mA, $V_O = 6$ x V_{FLED_max} + $V_{RSENSE} = 24$ V (1)		85		%
ν	Efficiency of the whole application	$V_{IN} = 10$ V, $I_O = 20$ mA, $V_O = 6$ x V_{FLED_max} + $V_{RSENSE} = 24$ V (1)		83		%
OVP	Output overvoltage protection	$V_{IN} = 3$ V, no load		28		V
T_{SHDN}	Thermal shutdown		130	150		°C
T_{HYS}	Thermal shutdown hysteresis			15		°C
V_{IL}	Low and high level input logic signal on EN pin	$V_{IN} = 2.5$ V to 18 V, $V_{ENMAX} = 12$ V	0		1.5	V
V_{IH}			1.8		V_{IN}	
T_{EN}	LED current rise time I_{LED} = 0 to I_{LED} = 20 mA	$V_{IN} = 9$ V, $V_{EN} = 0$ V to 3 V 6 LEDs in series (1)		0.2		ms
$T_{RESPONSE}$	LED current rise time I_{LED} = 0 mA to I_{LED} = 20 mA	$V_{IN} = 9$ V, $V_{EN} = 0$ V to 3 V, 6 LEDs in series (1), V_{OUT} precharged		60		µs

1. Guaranteed by design, but not tested in production.

6 Typical performance characteristics

Figure 4. Efficiency at 20 mA current load

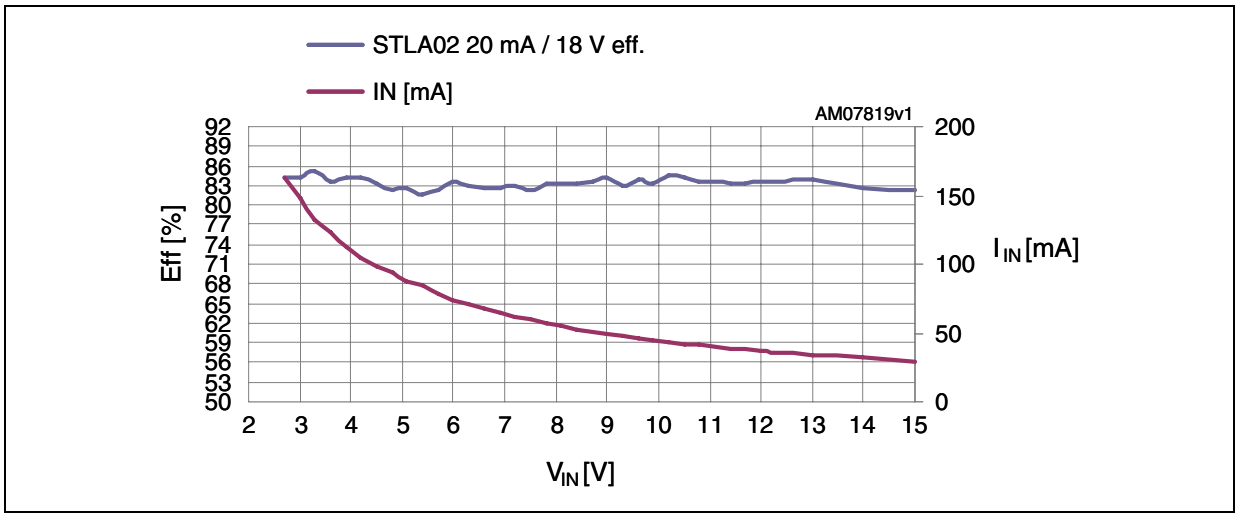

Figure 5. Quiescent current vs. V_{IN}

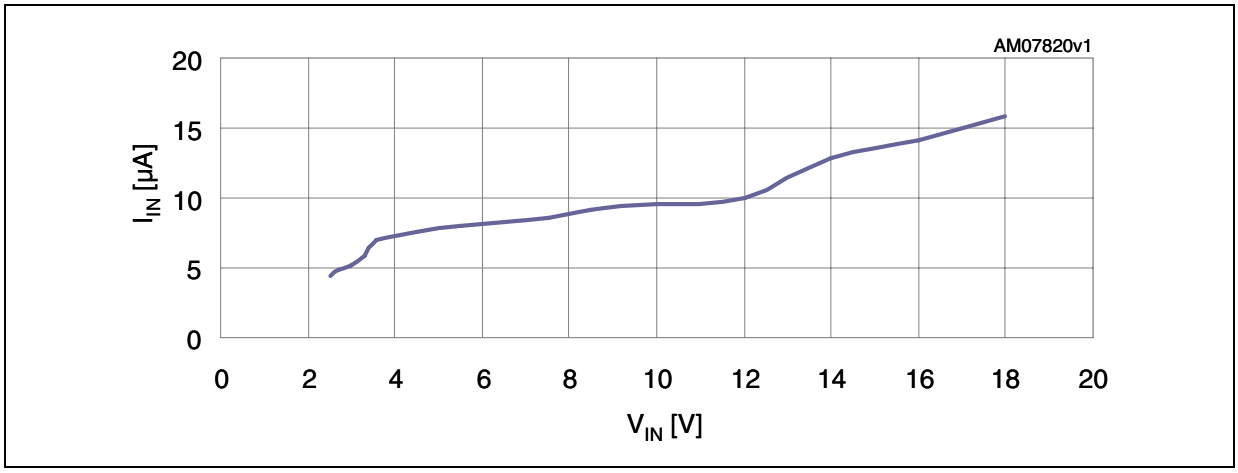

Figure 6. STLA02 driver current consumption vs. V_{IN}

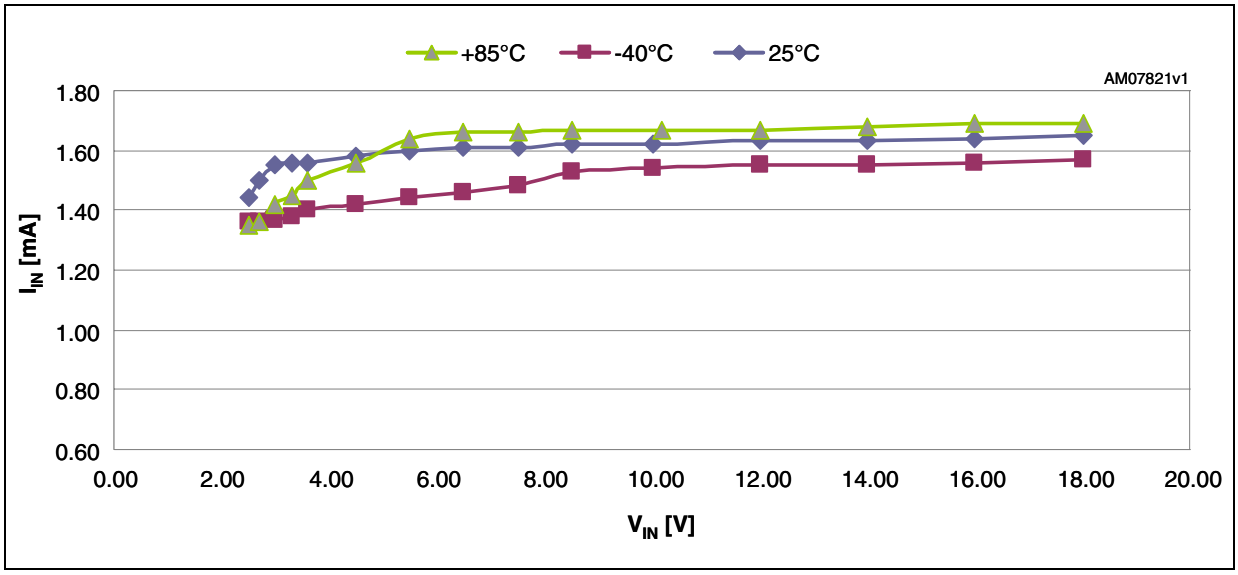

Figure 7. Switching frequency vs. temperature

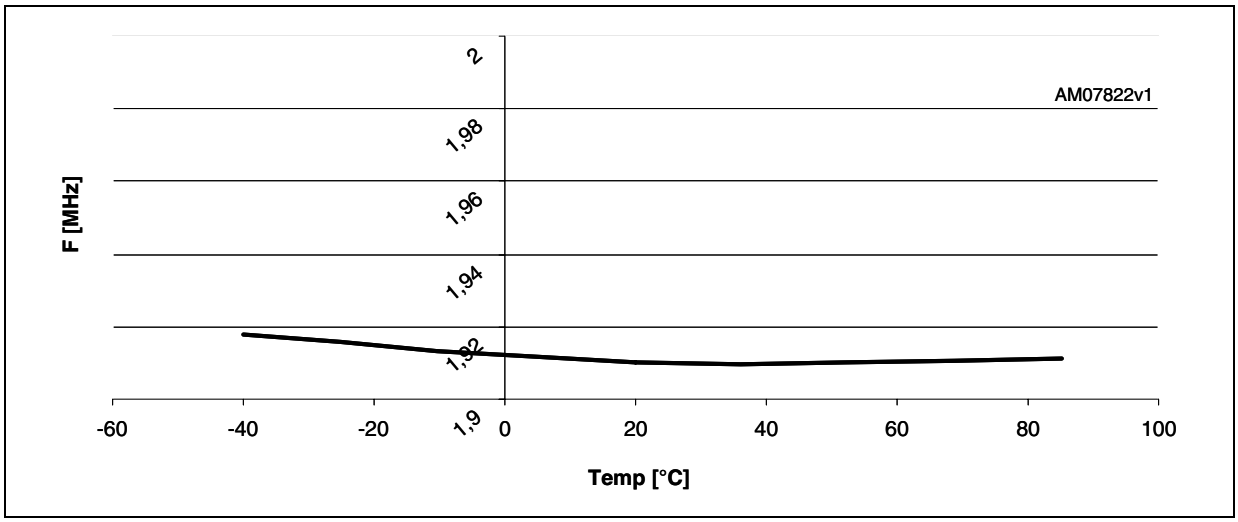

Figure 8. Switching frequency vs. V_{IN} @ P_{OUT} = 0.36 W

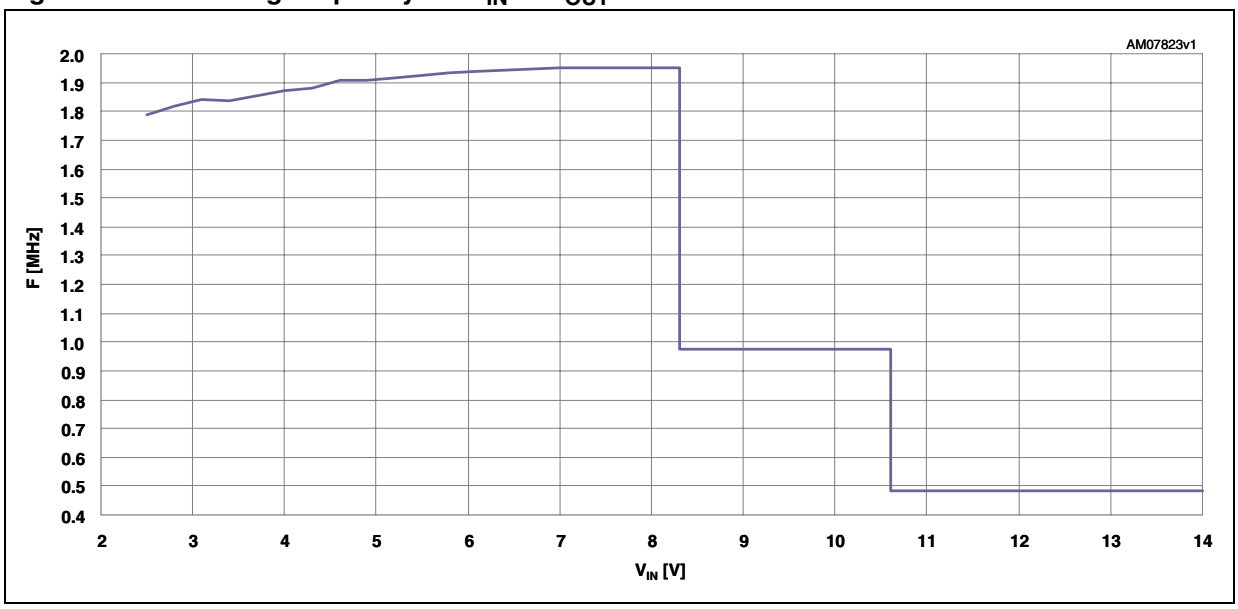

Figure 9. Overvoltage protection threshold vs. V_{IN}

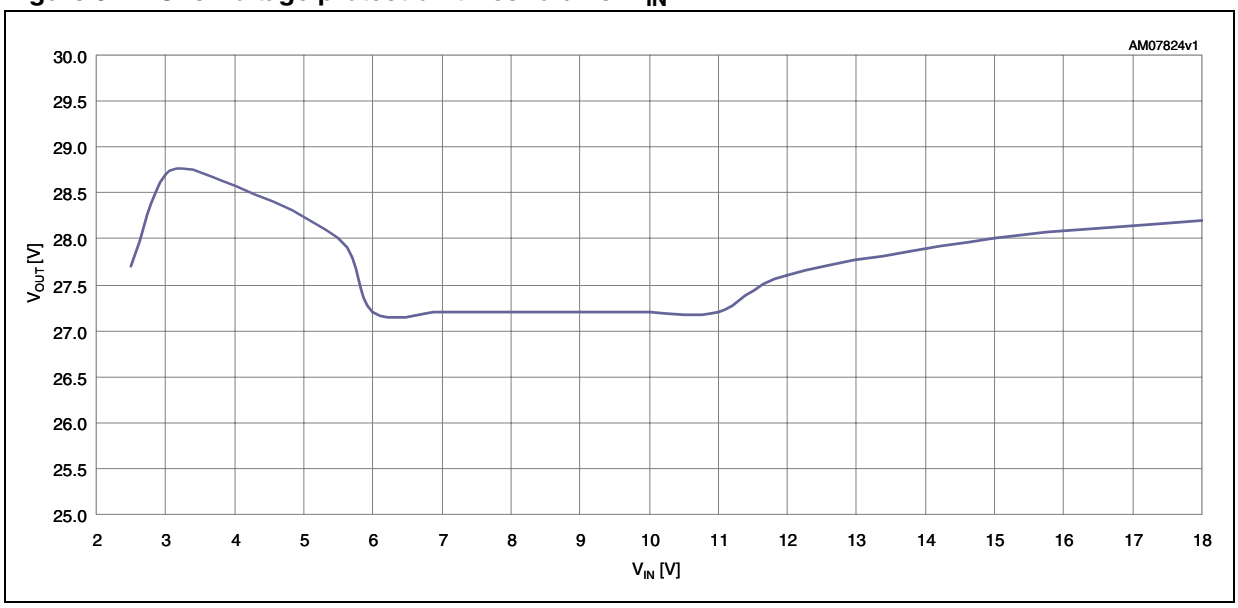

Figure 10. Overvoltage protection threshold vs. temp

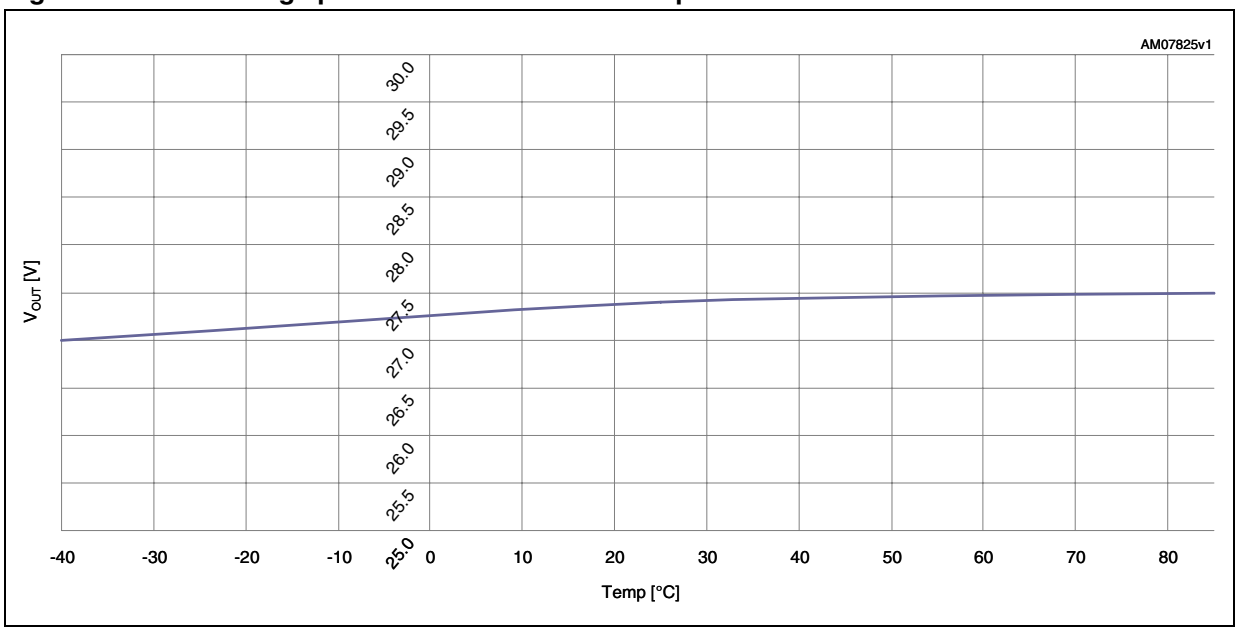

Figure 11. Output current regulation vs. V_{IN}

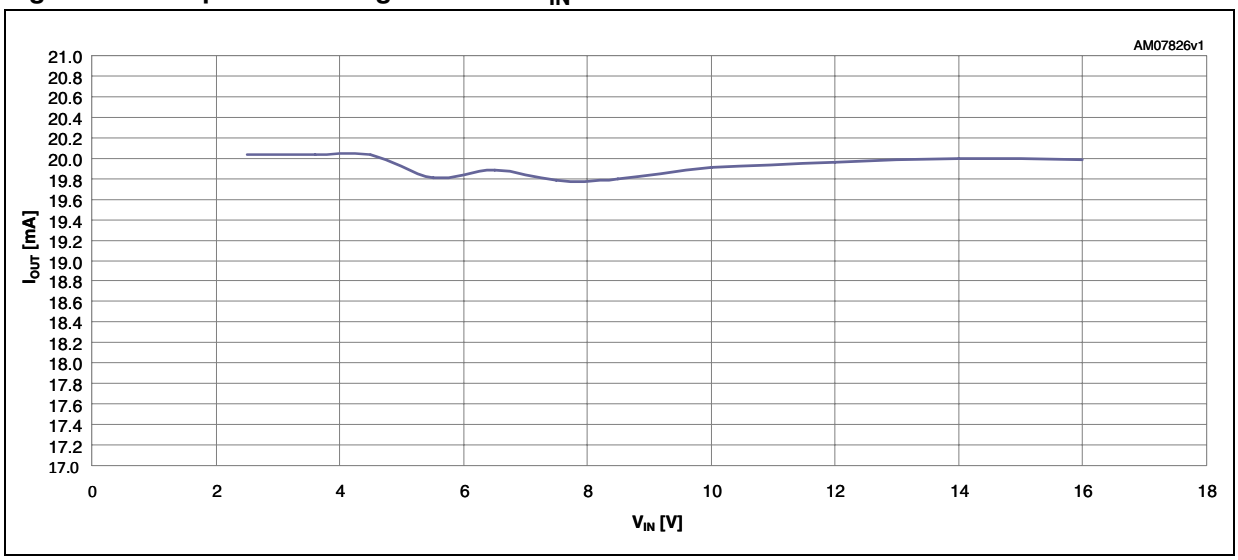

Figure 12. Switching waveform at V_{IN} = 2.5 V

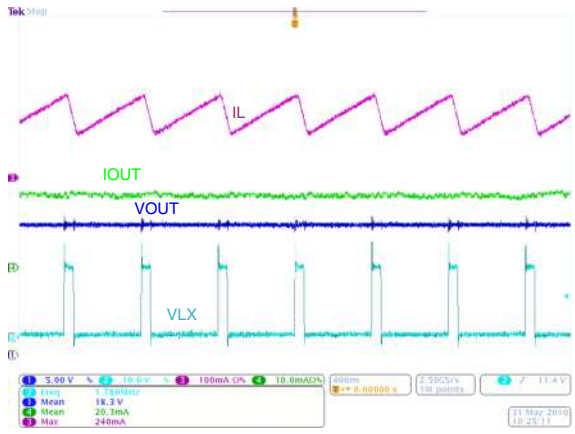

Figure 13. Switching waveform at V_{IN} = 7 V

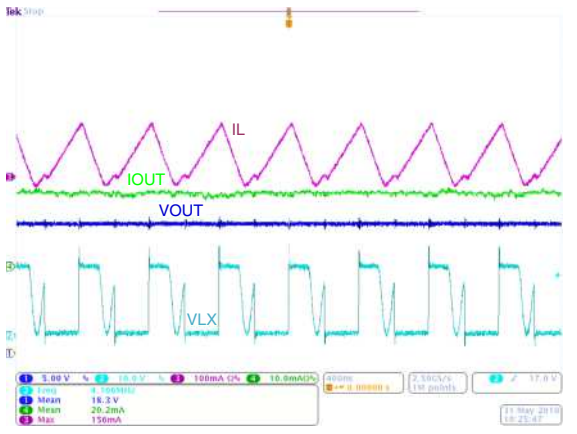

Figure 14. Switching waveform at V_{IN} = 12 V

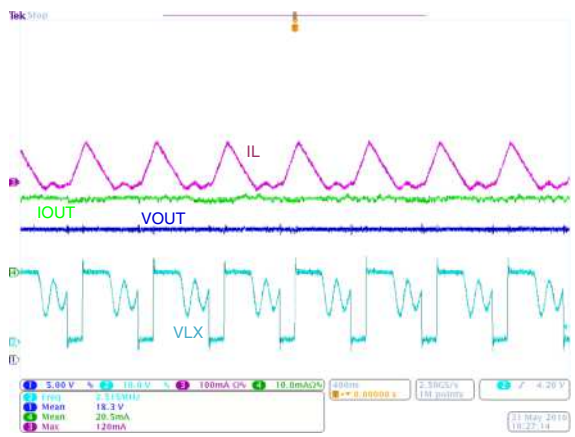

Figure 15. Overvoltage function

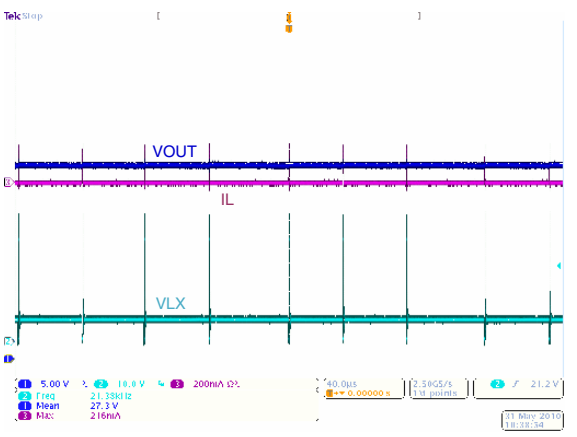

Figure 16. Line transient response V_{IN} = 3.4 V to 4 V step

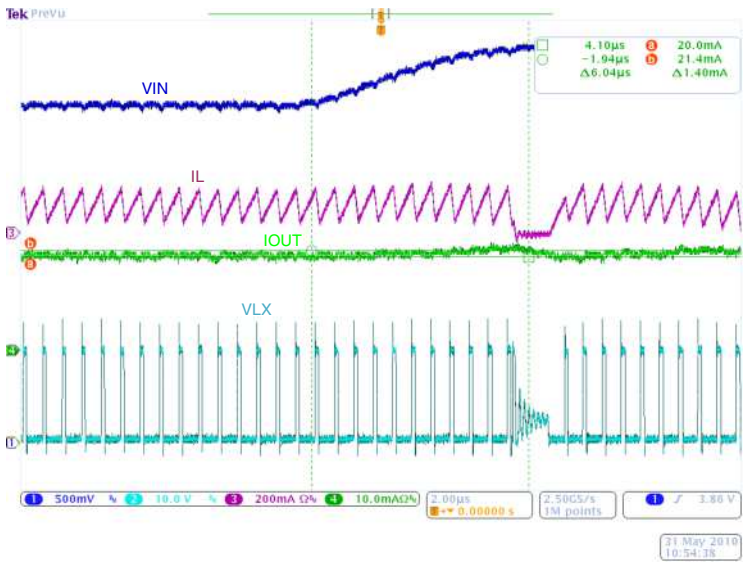

Figure 17. Direct PWM dimming 300 Hz at V_{BAT} = 2.5 V, V_{EN} = 0 to 3 V step

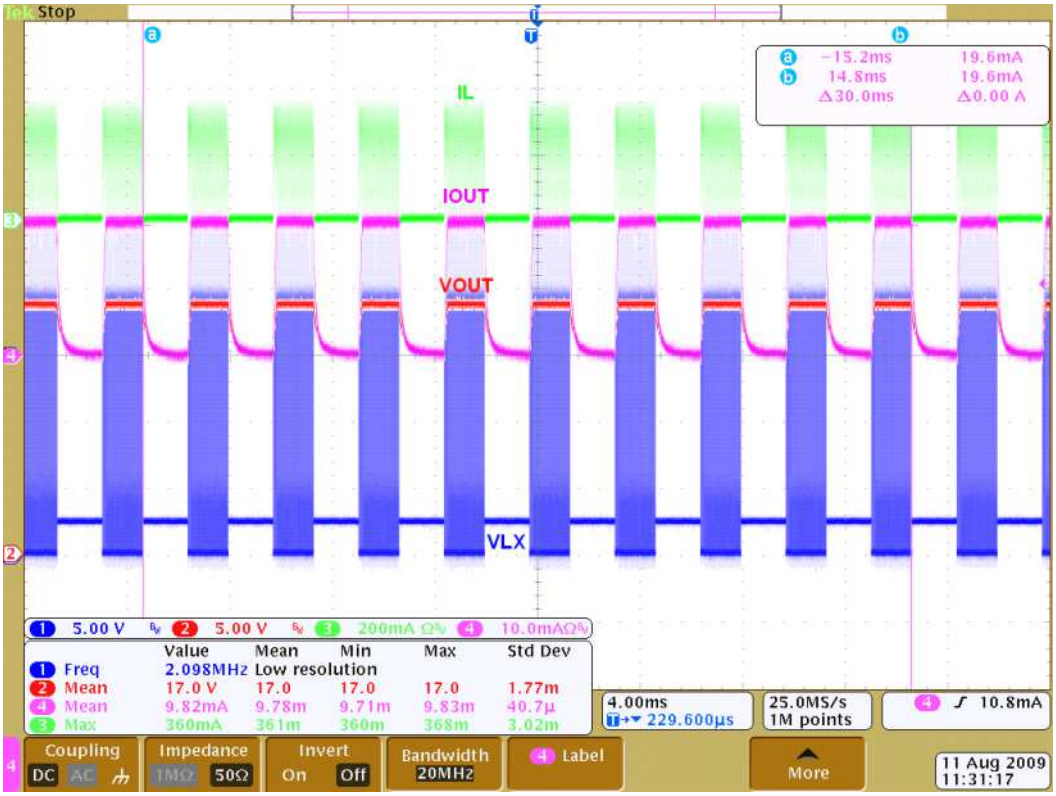

7 Introduction

The STLA02 is a boost converter dedicated to powering and controlling the current of white LEDs in an LCD backlight. The device operates at a typical constant switching frequency of 2.3 MHz. It steps an input voltage ranging from 2.5 V to 18 V, up to 27 V. The output current is adjustable by the resistor R_{FB} connected between the V_{OUT} and FB pins. The STLA02 device contains high side sensing to simplify the PCB layout in terms of connection of the LEDs.

The output current is dimmable by the PWM signal applied to the EN pin with minimum PWM frequency equal 100 Hz.

7.1 PWM input (EN)

Light intensity can be dimmed by a signal applied to the PWM (EN) input.

The PWM signal is directly connected to the enable pin of the STLA02. It is recommended to use the frequency of the PWM signal in the range of 100 Hz to 1 kHz and amplitude of the signal 1.8 V min. The result of the direct PWM dimming method (300 Hz PWM and V_{EN} = 1.8 V) is shown in *Figure 17*.

Note: When the device is required to operate in a constant current mode with the EN pin connected to the voltage higher than 1.8 V, then the delay between rise times of V_{IN} voltage of the device and the EN voltage is mandatory to guarantee the proper internal reset of the logic of the device during ramping of the V_{IN}. It is recommended to delay the EN voltage rise time by 2 ms after the rise time on V_{IN} appears.

7.2 Selection of the external components

C_{IN} selection

It is recommended to use 1 µF as the input capacitor to achieve good stability of the device and low noise on the V_{IN} track.

C_{OUT} selection

It is recommended to use 1 µF as the optimal value of output capacitor to get the best compromise between output voltage ripple and load transients response. The output ripple can be checked according to the equation for step-up architecture:

Equation 1

$$V_{PK-PK} = \frac{I_{OUT(MAX)} * \left(V_{OUT} - V_{IN(MIN)}\right) * 100}{C_{OUT} * V_{OUT}^{2} * f} [V;A,V,F,Hz]$$

Inductor selection

A thin shielded inductor with a low DC series winding resistance is recommended for this application. To achieve a good efficiency in step-up mode, it is recommended to use an inductor with a DC series resistance $R_{DCL} = R_D/10$ [Ω; Ω; 1], where R_D is the dynamic resistance of the LED [Ω; Ω; 1].

For nominal operation, the peak inductor current can be calculated by the formula:

Equation 2

$$I_{PEAK} = \left\{ \left(\frac{I_{OUT}}{\nu} \right) + \frac{\left[(V_{OUT} - V_{IN}) * V_{IN}^{2} \right]}{2 * L * f * V_{OUT}^{2}} \right\} * \frac{V_{OUT}}{V_{IN}}$$

where:

I_{PEAK} Peak inductor current

I_{OUT} Current sourced at the V_{OUT} pin

ν Efficiency of the STLA02

V_{OUT} Output voltage at the V_{OUT} pin

V_{IN} Input voltage at the V_{IN} pin

L Inductance value of the inductor

f Switching frequency

For the optimal function of the STLA02 device, it is recommended to use the inductor value 10 µH and higher with low serial resistance and relevant saturation current calculated from the equation above.

R_{FB} value

$R_{FB} = V_{FB} / I_{LED}$

In the case of a typical setting I_{LED} = 20 mA, V_{FB} = 200 mV, and R_{SENSE} = 10 Ω. The resistor must be rated for a power dissipation of 10 x 0.02^2 W = 0.004 W.

PCB layout

STLA02 is a powerful switched device, the PCB must be designed in line with rules for designing switched supplies. It is recommended to use a two layer PCB. The power wirings must be as short as possible and wide. Place all external components close to the STLA02. High-energy switched loops should be as small as possible to reduce EMI. Most LEDs need cooling, which may be done by a defined area of copper on the PCB. Use the reference guide of each LED to design the heatsink. Place the R_{FB} resistor as close as possible to pin 4 and 5. When a change of PCB layer is needed, use enough vias. During routing the PCB must be focused on the minimum area of the application ground - the smaller the ground area of the DC-DC converter [(a)], the better stability and lower noise issues are achieved. It is recommended to place the copper plate, connected through the vias to the Exposed pad, on the bottom layer to create the heatsink of the device.

a. The application ground area is represented by the area which is created by the ground pins of the C_{IN}, C_{OUT}, ground of the DEVICE and GND connection of the load.

Figure 18. Top layer

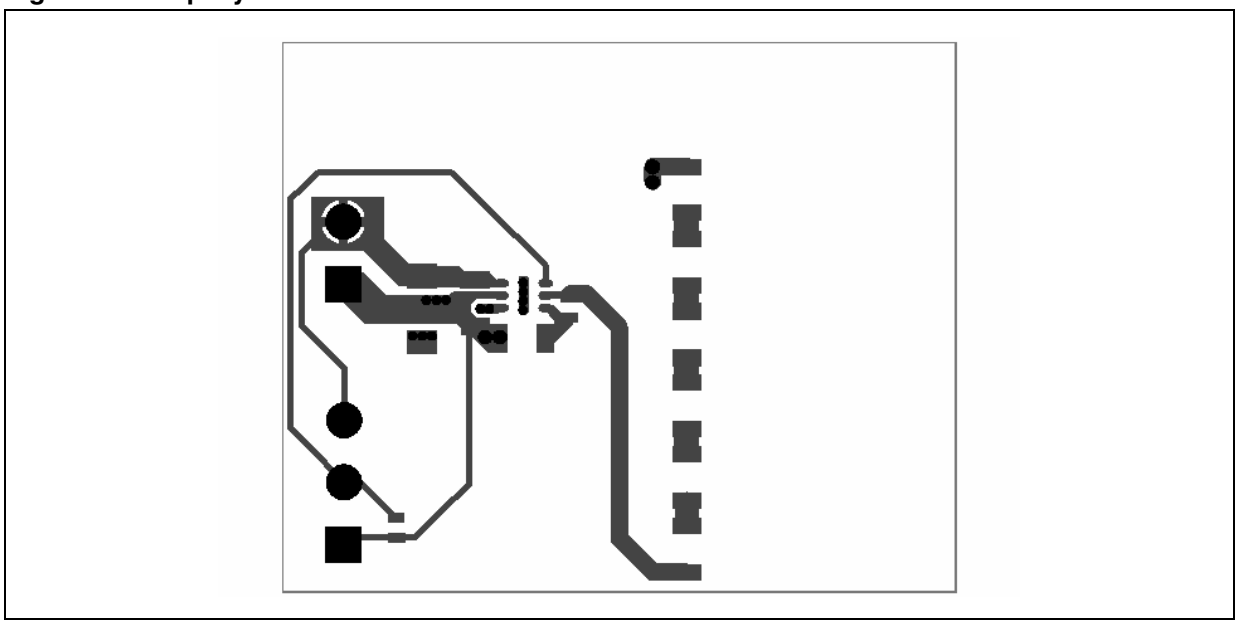

Figure 19. Bottom layer

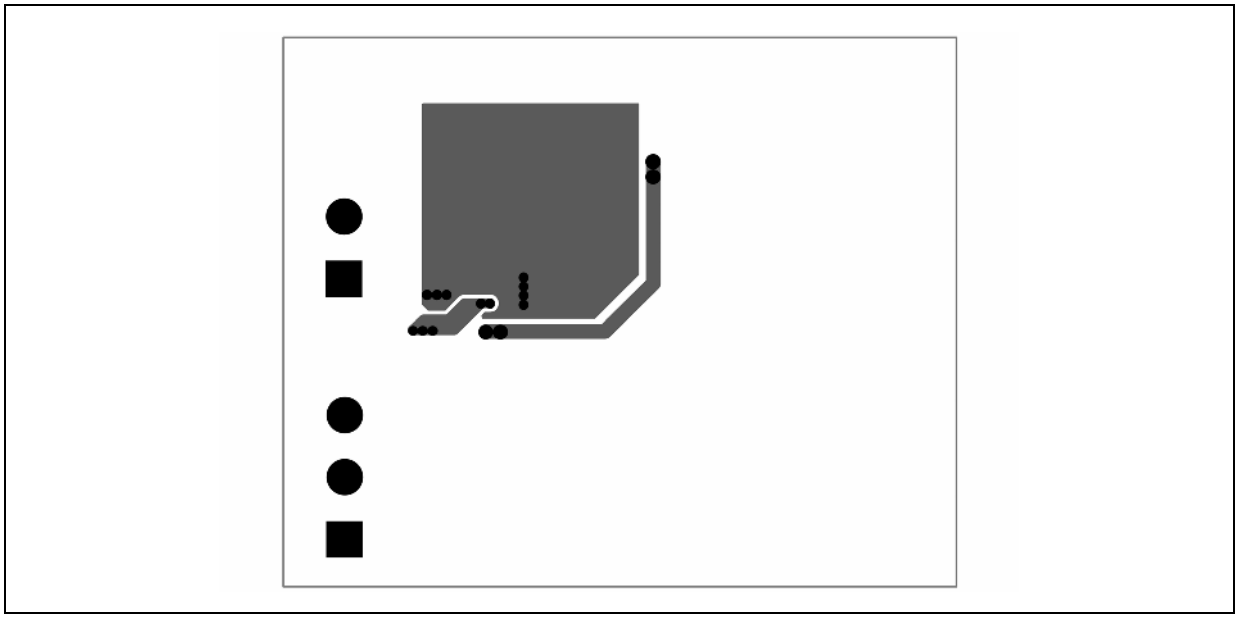

Figure 20. Top overlay

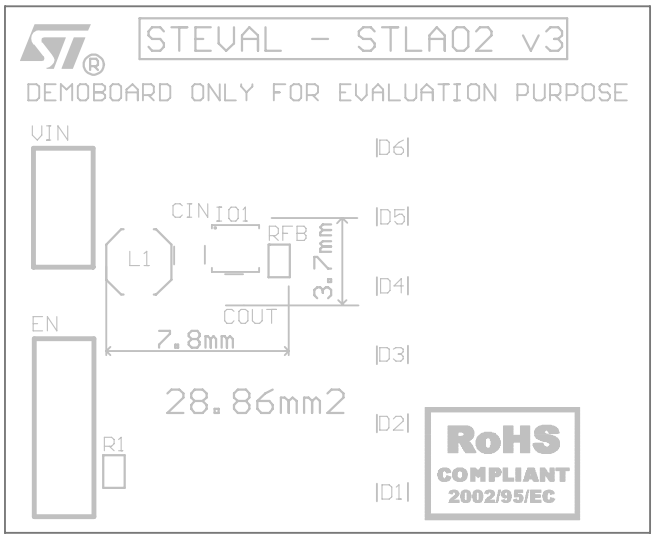

8 Package mechanical data

In order to meet environmental requirements, ST offers these devices in different grades of ECOPACK® packages, depending on their level of environmental compliance. ECOPACK specifications, grade definitions, and product status are available at *www.st.com*. ECOPACK is an ST trademark.

Table 8. DFN6 (2 x 2 mm.) mechanical data

Dim.	mm.		
	Min.	Typ.	Max.
A	0.70	0.75	0.80
A1	0	0.02	0.05
A3		0.20	
b	0.18	0.25	0.30
D	1.90	2.00	2.10
D2	1.35	1.50	1.60
E	1.90	2.00	2.10
E2	0.15	0.30	0.40
e		0.50	
L	0.25	0.35	0.45

Figure 21. DFN6 (2 x 2 mm.) drawing

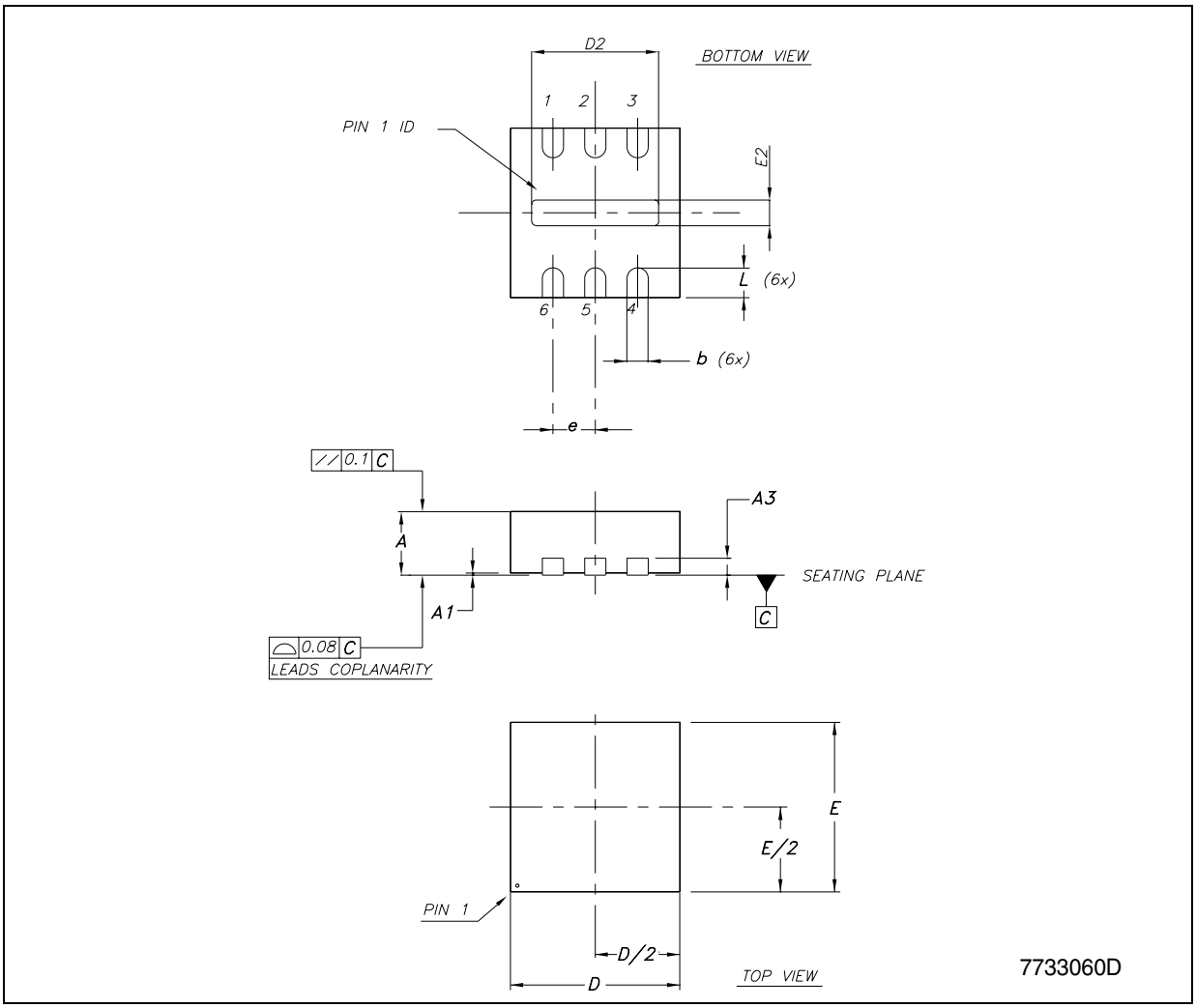

Table 9. DFN6 (2 x 2 mm.) tape and reel mechanical data

Dim.	mm.			inch.		
	Min.	Typ.	Max.	Min.	Typ.	Max.
A			180			7.087
C	12.8		13.2	0.504		0.519
D	20.2			0.795		
N	60			2.362		
T			14.4			0.567
Ao		2.3			0.091	
Bo		2.3			0.091	
Ko		1.0			0.039	
Po		4			0.157	
P		8			0.315	

Figure 22. DFN6 (2 x 2 mm.) tape and reel drawing

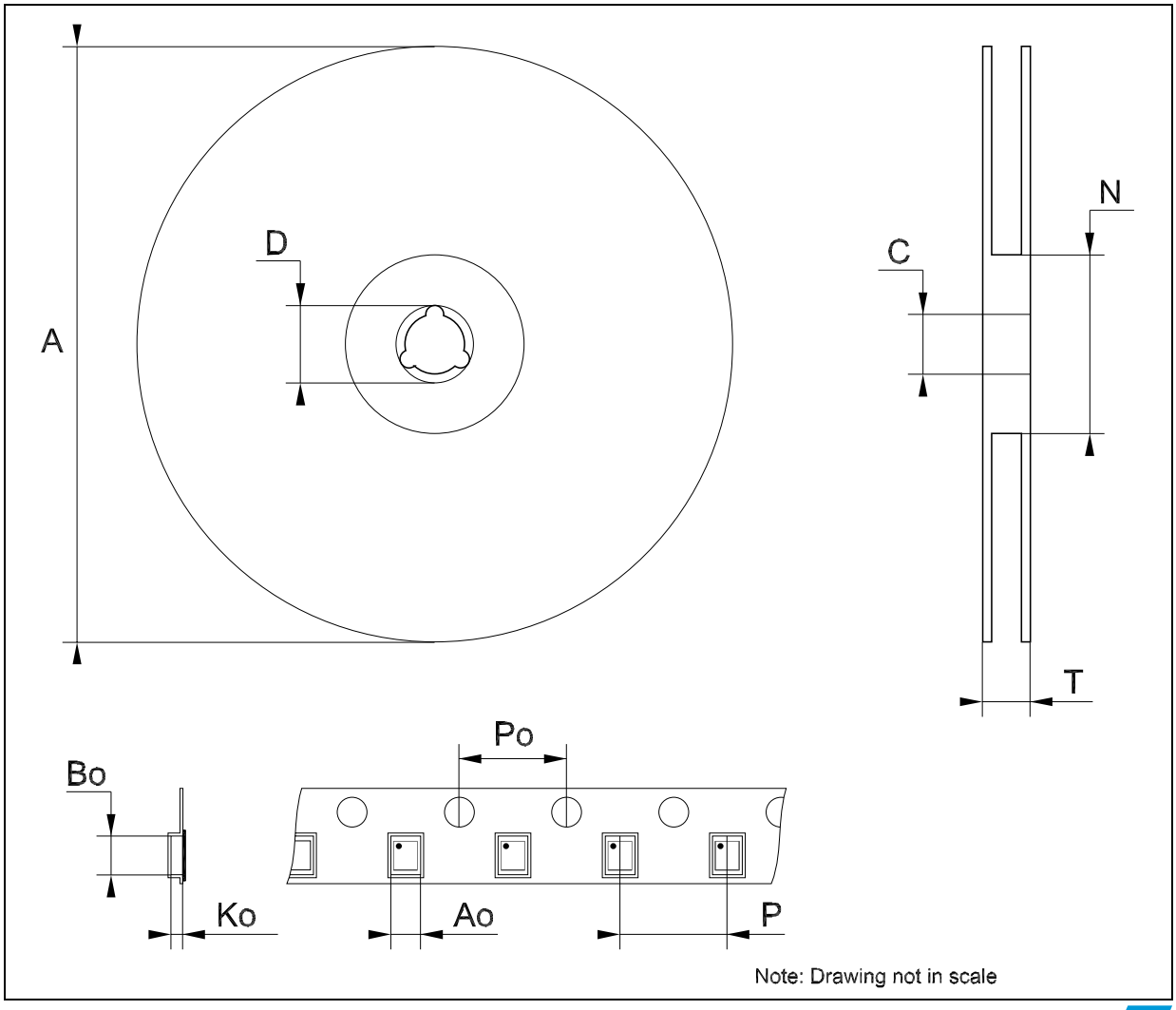

Figure 23. DFN6 (2 x 2 mm) footprint recommended data

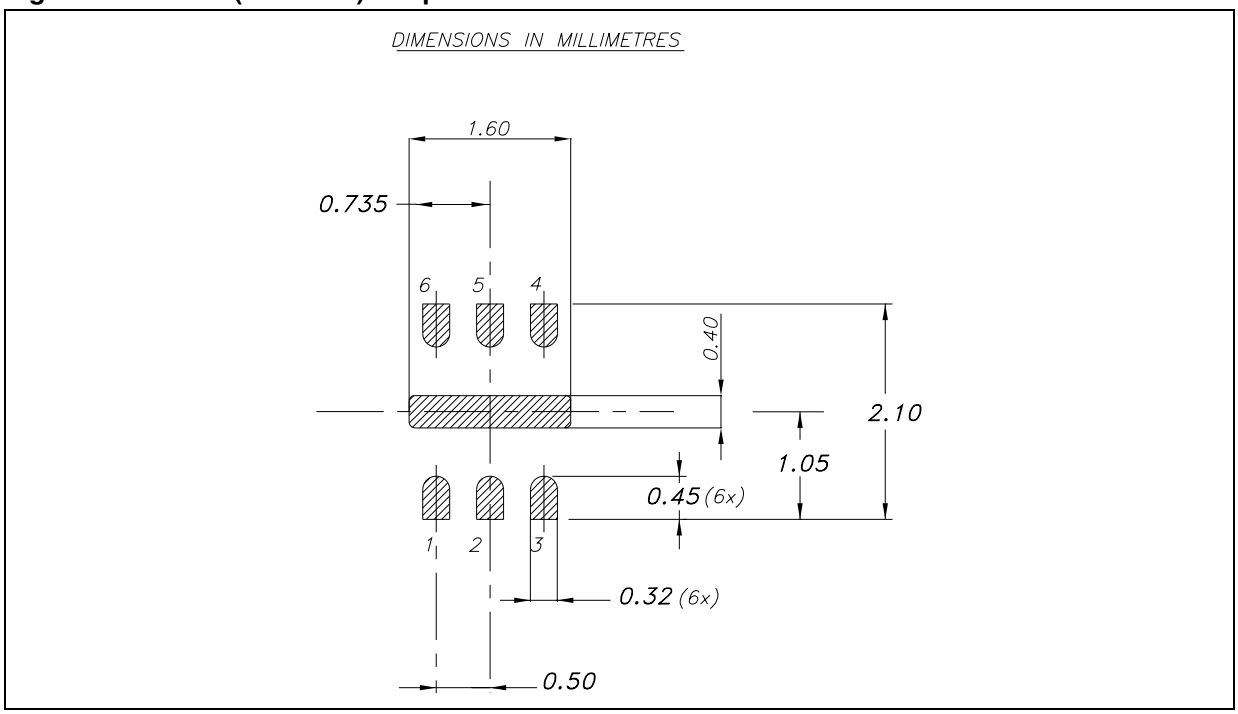

9 Revision history

Table 10. Document revision history

Date	Revision	Changes
22-Feb-2011	1	Initial release

Please Read Carefully:

Information in this document is provided solely in connection with ST products. STMicroelectronics NV and its subsidiaries (“ST”) reserve the right to make changes, corrections, modifications or improvements, to this document, and the products and services described herein at any time, without notice.

All ST products are sold pursuant to ST’s terms and conditions of sale.

Purchasers are solely responsible for the choice, selection and use of the ST products and services described herein, and ST assumes no liability whatsoever relating to the choice, selection or use of the ST products and services described herein.

No license, express or implied, by estoppel or otherwise, to any intellectual property rights is granted under this document. If any part of this document refers to any third party products or services it shall not be deemed a license grant by ST for the use of such third party products or services, or any intellectual property contained therein or considered as a warranty covering the use in any manner whatsoever of such third party products or services or any intellectual property contained therein.

UNLESS OTHERWISE SET FORTH IN ST’S TERMS AND CONDITIONS OF SALE ST DISCLAIMS ANY EXPRESS OR IMPLIED WARRANTY WITH RESPECT TO THE USE AND/OR SALE OF ST PRODUCTS INCLUDING WITHOUT LIMITATION IMPLIED WARRANTIES OF MERCHANTABILITY, FITNESS FOR A PARTICULAR PURPOSE (AND THEIR EQUIVALENTS UNDER THE LAWS OF ANY JURISDICTION), OR INFRINGEMENT OF ANY PATENT, COPYRIGHT OR OTHER INTELLECTUAL PROPERTY RIGHT.

UNLESS EXPRESSLY APPROVED IN WRITING BY AN AUTHORIZED ST REPRESENTATIVE, ST PRODUCTS ARE NOT RECOMMENDED, AUTHORIZED OR WARRANTED FOR USE IN MILITARY, AIR CRAFT, SPACE, LIFE SAVING, OR LIFE SUSTAINING APPLICATIONS, NOR IN PRODUCTS OR SYSTEMS WHERE FAILURE OR MALFUNCTION MAY RESULT IN PERSONAL INJURY, DEATH, OR SEVERE PROPERTY OR ENVIRONMENTAL DAMAGE. ST PRODUCTS WHICH ARE NOT SPECIFIED AS "AUTOMOTIVE GRADE" MAY ONLY BE USED IN AUTOMOTIVE APPLICATIONS AT USER’S OWN RISK.

Resale of ST products with provisions different from the statements and/or technical features set forth in this document shall immediately void any warranty granted by ST for the ST product or service described herein and shall not create or extend in any manner whatsoever, any liability of ST.

ST and the ST logo are trademarks or registered trademarks of ST in various countries.

Information in this document supersedes and replaces all information previously supplied.

The ST logo is a registered trademark of STMicroelectronics. All other names are the property of their respective owners.

© 2011 STMicroelectronics - All rights reserved

STMicroelectronics group of companies

Australia - Belgium - Brazil - Canada - China - Czech Republic - Finland - France - Germany - Hong Kong - India - Israel - Italy - Japan - Malaysia - Malta - Morocco - Philippines - Singapore - Spain - Sweden - Switzerland - United Kingdom - United States of America

www.st.com