STEF05

Electronic fuse for 5 V line

Datasheet – production data

Features

- Continuous current (typ): 3.6 A
- N-channel on-resistance (typ): 40 mΩ
- Enable/Fault functions
- Output clamp voltage (typ): 6.65 V
- Undervoltage lockout
- Short-circuit limit
- Overload current limit
- Controlled output voltage ramp
- Thermal latch (typ): 165 °C
- Uses tiny capacitors
- Operating junction temp. - 40 °C to 125 °C
- Available in DFN10 (3x3 mm) package

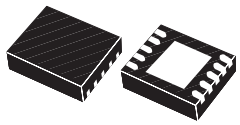

DFN10 (3x3 mm)

Applications

- Hard disk drives
- Solid state drives (SSD)
- Hard disk and SSD arrays
- Set-top boxes
- DVD and Blu-ray disc drivers

Description

The STEF05 is an integrated electronic fuse optimized for monitoring output current and input voltage. Connected in series to a 5 V rail, it is capable of protecting the electronic circuitry on its output from overcurrent and overvoltage. The device has a controlled delay and turn-on time. When an overload condition occurs, the STEF05 limits the output current to a predefined safe value. If the anomalous overload condition persists, it goes into an open state, disconnecting the load from the power supply. If a continuous short-circuit is present on the board, when power is re-applied the E-fuse initially limits the output current to a safe value, and then again goes into an open state. The device is equipped with a thermal protection circuit. The intervention of the thermal protection is signalled to the board monitoring circuits through a signal on the Fault pin. Unlike mechanical fuses, which must be physically replaced after a single event, the E-fuse does not degrade in its performance after short-circuit/thermal protection interventions and it is reset either by recycling the supply voltage or using the Enable pin. The companion chip for 12 V power rails is also available with part number STEF12.

Table 1. Device summary

Order code	Package	Packaging
STEF05PUR	DFN10 (3x3 mm)	Tape and reel

This is information on a product in full production. www.st.com

Contents

1 Device block diagram 3

2 Pin configuration 4

3 Maximum ratings 5

4 Electrical characteristics 6

5 Typical application 8

5.1 Operating modes 8

5.1.1 Turn-on 8

5.1.2 Normal operating condition 9

5.1.3 Output voltage clamp 9

5.1.4 Current limiting 9

5.1.5 Thermal shutdown 9

5.2 R limit calculation 9

5.3 Cdv/dt calculation 9

5.4 Enable/Fault pin 10

6 Typical performance characteristics 12

7 Package mechanical data 15

8 Revision history 19

1 Device block diagram

Figure 1. STEF05 block diagram

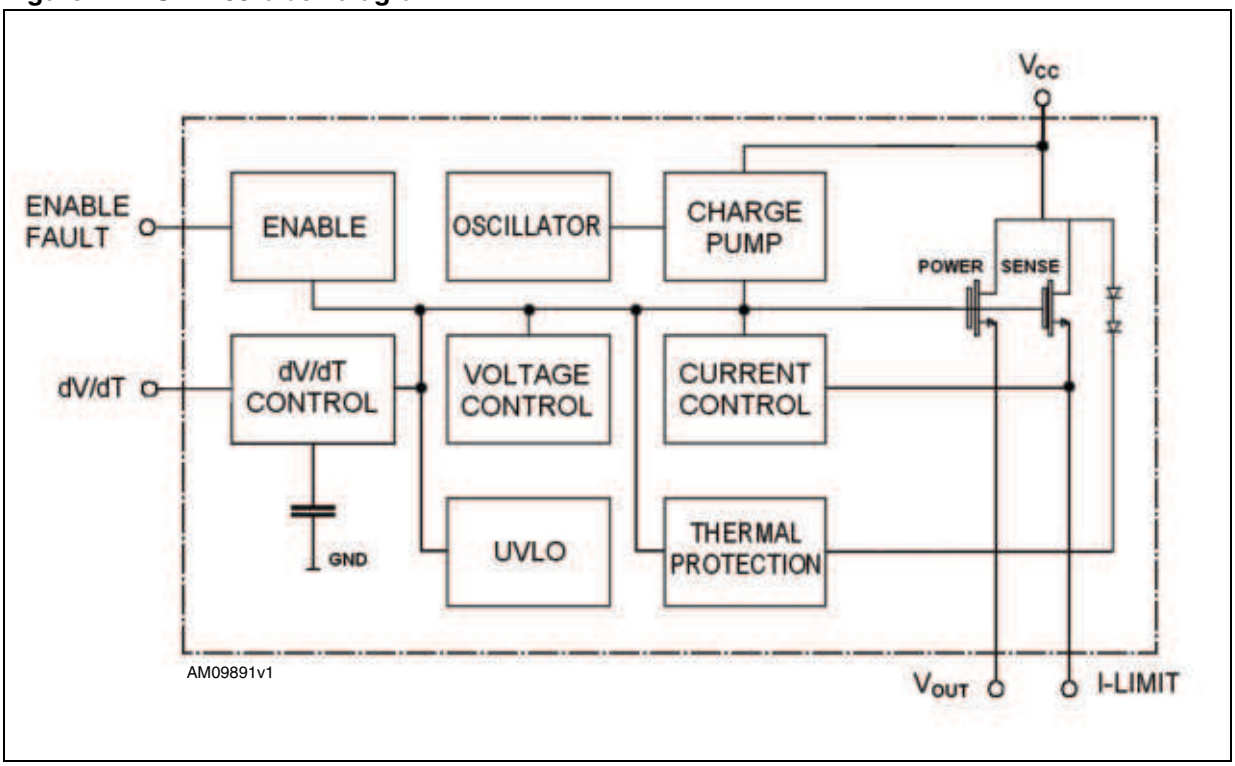

2 Pin configuration

Figure 2. Pin configuration (top view)

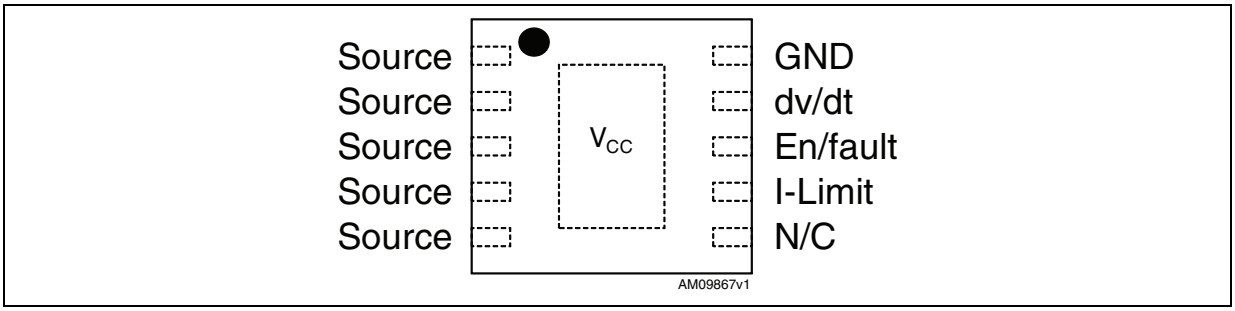

Table 2. Pin description

Pin n°	Symbol	Note
1 to 5	V_{OUT}/Source	Connected to the source of the internal power MOSFET and to the output terminal of the fuse
6	NC	Not connected
7	I-Limit	A resistor between this pin and the Source pin sets the overload and short-circuit current limit levels.
8	En/Fault	The Enable/Fault pin is a tri-state, bi-directional interface. During normal operation the pin must be left floating, or it can be used to disable the output of the device by pulling it to ground using an open drain or open collector device. If a thermal fault occurs, the voltage on this pin goes into an intermediate state to signal a monitor circuit that the device is in thermal shutdown. It can be connected to another device of this family to cause a simultaneous shutdown during thermal events.
9	dv/dt	The internal dv/dt circuit controls the slew rate of the output voltage at turn-on. The internal capacitor allows a ramp-up time of around 1 ms. An external capacitor can be added to this pin to increase the ramp time. If an additional capacitor is not required, this pin should be left open.
10	GND	Ground pin
11	V_{CC}	Exposed pad. Positive input voltage must be connected to V_{CC}.

3 Maximum ratings

Table 3. Absolute maximum ratings

Symbol	Parameter	Value	Unit
V_{CC}	Positive power supply voltage (steady state)	-0.3 to 10	V
	Positive power supply voltage (max 100 ms)	-0.3 to 15	
V_{OUT}/source	(max 100 ms)	-0.3 to Vcc+0.3	V
I-Limit	(max 100 ms)	-0.3 to 15	V
En/Fault		-0.3 to 7	V
dv/dt		-0.3 to 7	V
T_{op}	Operating junction temperature range (1)	-40 to 125	°C
T_{STG}	Storage temperature range	-65 to 150	°C
T_{LEAD}	Lead temperature (soldering) 10 sec	260	°C

1. The thermal limit is set above the maximum thermal rating. It is not recommended to operate the device at temperatures greater than the maximum ratings for extended periods of time.

Note: Absolute maximum ratings are those values beyond which damage to the device may occur. Functional operation under these conditions is not implied.

Table 4. Thermal data

Symbol	Parameter	Value	Unit
R_{thJA}	Thermal resistance junction-ambient	52.7	°C/W
R_{thJC}	Thermal resistance junction-case	17.4	°C/W

Table 5. ESD performance

Symbol	Parameter	Test conditions	Value	Unit
ESD	ESD protection	HBM	2	kV
		MM	150	V
		CDM	500	V

4 Electrical characteristics

V_{CC} = 5 V, V_{EN} = 3.3 V, C_I = 10 µF, C_O = 47 µF, T_J = 25 °C (unless otherwise specified).

Table 6. Electrical characteristics for the STEF05

Symbol	Parameter	Test conditions	Min.	Typ.	Max.	Unit
Under/overvoltage protection						
V_{Clamp}	Output clamping voltage	V_{CC} = 10 V	5.95	6.65	7.35	V
V_{UVLO}	Undervoltage lockout	Turn-on, voltage rising	3.2	3.6	4	V
V_{Hyst}	UVLO hysteresis			0.40		V
Power MOSFET						
t_{dly}	Delay time	Enabling of chip to I_D = 100 mA with a 1 A resistive load		500		µs
R_{DSon}	On-resistance	(1)	20	40	60	mΩ
		-40 °C < T_J < 125 °C (2)			70	
V_{OFF}	Off state output voltage	V_{CC} = 10 V, V_{GS} = 0, R_L = infinite		35	100	mV
I_D	Continuous current	0.5 in^2 pad, T_A = 25 °C (2)		3.6		A
		Minimum copper, T_A= 80 °C		1.7		
Current limit						
I_{Short}	Short-circuit current limit	R_{Limit} = 22 Ω	1.9	2.9	3.9	A
I_{Lim}	Overload current limit	R_{Limit} = 22 Ω		2.9		A
dv/dt circuit						
dv/dt	Output voltage ramp time	Enable to V_{OUT} = 4.7 V, No $C_{dv/dt}$	0.7	1.2	2.5	ms
Enable/Fault						
V_{IL}	Low level input voltage	Output disabled	0.35	0.58	0.81	V
$V_{I(INT)}$	Intermediate level input voltage	Thermal fault, output disabled	0.82	1.4	1.95	V
V_{IH}	High level input voltage	Output enabled	1.96	2.64	3.3	V
$V_{I(MAX)}$	High state maximum voltage		3.4	4.3	5.4	V
I_{IL}	Low level input current (sink)	V_{Enable} = 0 V		-10	-30	µA
I_I	High level leakage current for external switch	V_{Enable} = 3.3 V			1	µA
	Maximum fan-out for fault signal	Total numbers of chips that can be connected to this pin for simultaneous shutdown			3	Units
Total device						
I_{Bias}	Bias current	Device operational		0.5	2	mA
		Thermal shutdown		1		

Table 6. Electrical characteristics for the STEF05 (continued)

Symbol	Parameter	Test conditions	Min.	Typ.	Max.	Unit
V_{min}	Minimum operating voltage				3.1	V
Thermal latch						
TSD	Shutdown temperature	(2)		165		°C

1. Pulse test: Pulse width = 300 µs, duty cycle = 2%
2. Guaranteed by design, but not tested in production

5 Typical application

Figure 3. Application circuit

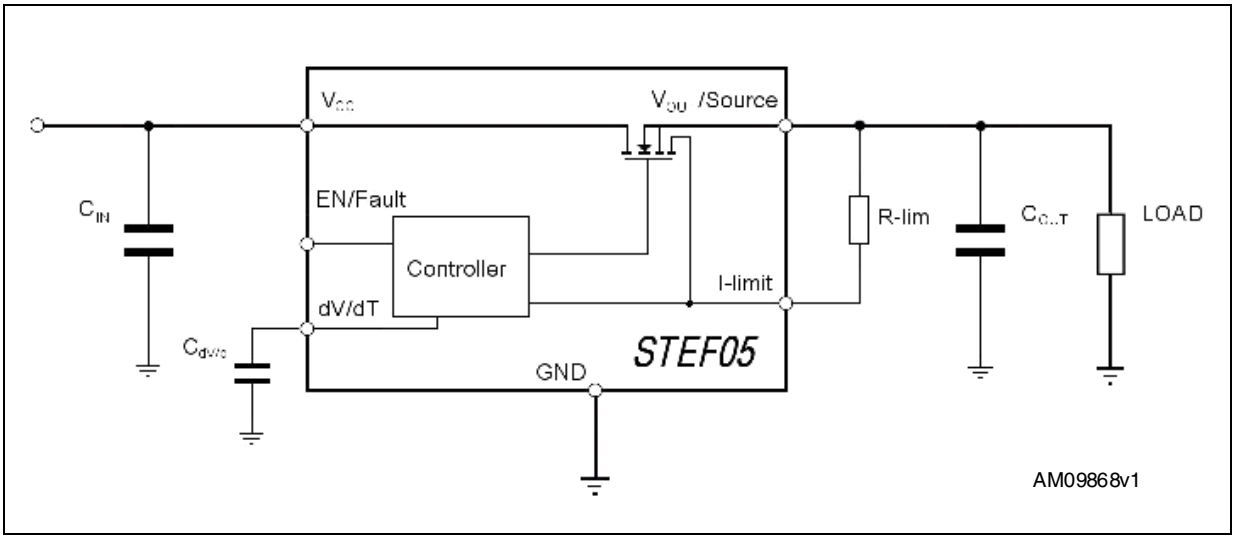

Figure 4. Typical HDD application circuit

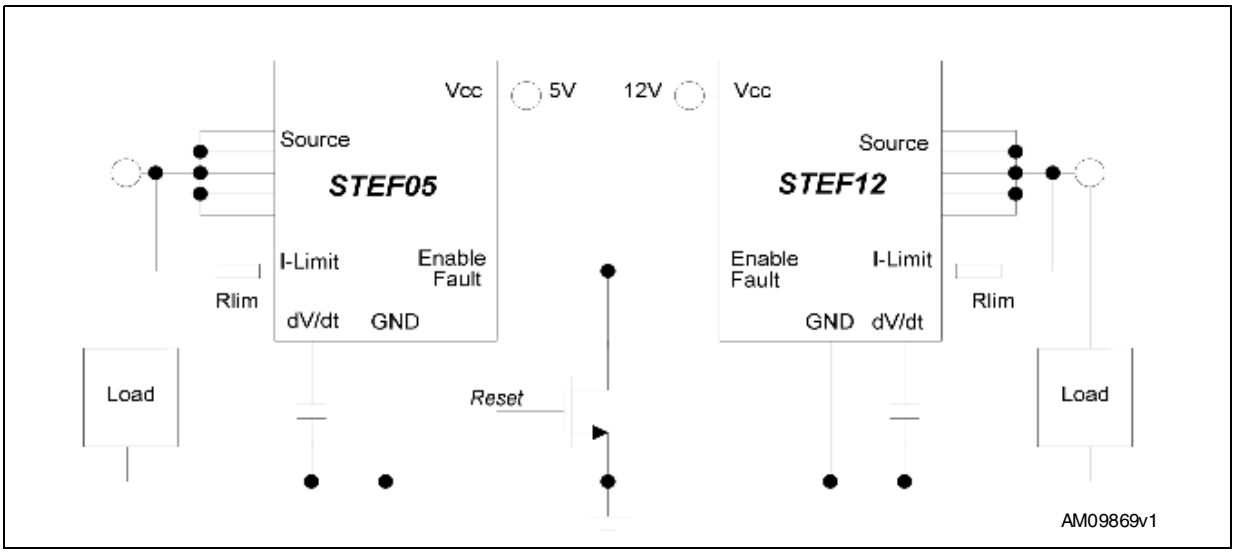

5.1 Operating modes

5.1.1 Turn-on

When the input voltage is applied, the Enable/Fault pin goes up to the high state, enabling the internal control circuitry.

After an initial delay time of typically 500 µs, the output voltage is supplied with a slope defined by the internal dv/dt circuitry. If no additional capacitor is connected to dv/dt pin, the total time from the Enable signal going high and the output voltage reaching the nominal value is around 1 ms (refer to *Figure 5, 15*).

5.1.2 Normal operating condition

The STEF05 E-fuse behaves like a mechanical fuse, buffering the circuitry on its output with the same voltage shown at its input, with a small voltage fall due to the N-channel MOSFET R_{DSOn}.

5.1.3 Output voltage clamp

This internal protection circuit clamps the output voltage to a maximum safe value, typically 6.65 V, if the input voltage exceeds this threshold.

5.1.4 Current limiting

When an overload event occurs, the current limiting circuit reduces the conductivity of the power MOSFET, in order to clamp the output current at the value selected externally by means of the limiting resistor R_{Limit} (*Figure 3*).

5.1.5 Thermal shutdown

If the device temperature exceeds the thermal latch threshold, typically 165 °C, the thermal shutdown circuitry turns the power MOSFET off, thus disconnecting the load. The EN/Fault pin of the device is automatically set at an intermediate voltage, in order to signal the overtemperature event. In this condition the E-fuse can be reset either by cycling the supply voltage or by pulling down the EN pin below the V_{il} threshold and then releasing it.

5.2 R limit calculation

As shown in *Figure 3*, the device uses an internal N-channel sense FET with a fixed ratio, to monitor the output current and limit it at the level set by the user.

The R_{Limit} value for achieving the requested current limitation can be estimated by using the following theoretical formula, together with the graph in *Figure 13: Current limit vs. RLimit*.

Equation 1

$$R_{Limit} = \frac{65}{I_{Short}}$$

5.3 $C_{dv/dt}$ calculation

Connecting a capacitor between the $C_{dv/dt}$ pin and GND allows the modification of the output voltage ramp-up time.

Given the desired time interval Δt during which the output voltage goes from zero to its maximum value, the capacitance to be added on the $C_{dv/dt}$ pin can be calculated using the following theoretical formula:

Equation 2

$$C_{dvdt} = 50 \times 10^{-9} \Delta t - 30 \times 10^{-12}$$

Where $C_{dv/dt}$ is expressed in Farads and the time in seconds.

The addition of an external $C_{dv/dt}$ also influences the initial delay time, defined as the time between the Enable signal going high and the start of the V_{OUT} slope *(Figure 5)*.

The contribution of the external capacitor to this time interval can be estimated by using the following theoretical formula:

Equation 3

$$\text{delay time} = 500 \times 10^{-6} + 13.6 \times 10^{6} \times C_{dvdt}$$

Figure 5. Delay time and V_{OUT} ramp-up time

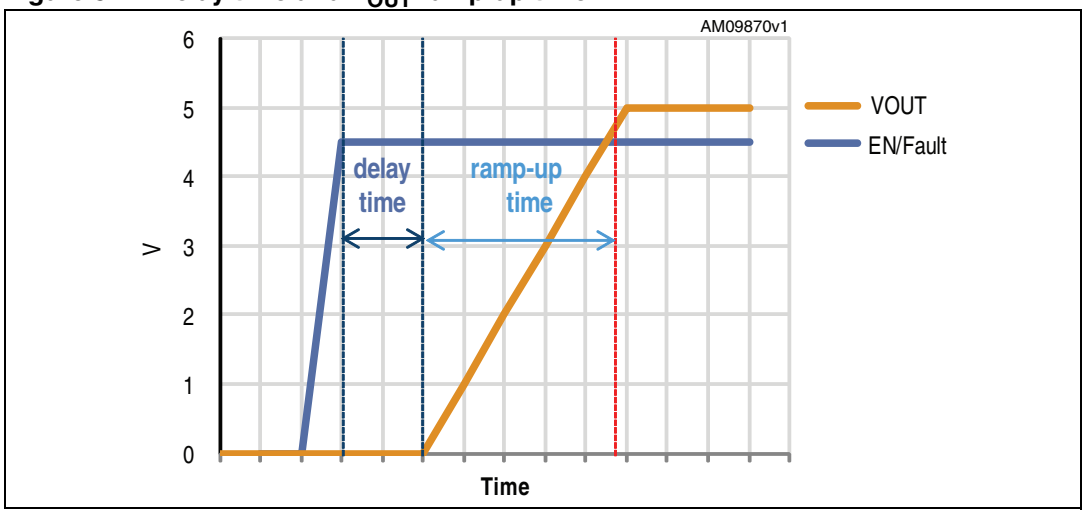

5.4 Enable/Fault pin

The Enable/Fault pin has the dual function of controlling the output of the device and, at the same time, of providing information about the device status to the application.

When it is used as a standard Enable pin, it should be connected to an external open-drain or open-collector device. In this case, when it is pulled at low logic level, it turns the output of the E-Fuse off.

If this pin is left floating, since it has internal pull-up circuitry, the output of the E-Fuse is kept ON in normal operating conditions.

In case of thermal fault, the pin is pulled to an intermediate state (*Figure 6*). This signal can be provided to a monitor circuit, informing it that a thermal shutdown has occurred, or it can be directly connected to the Enable/Fault pins of other STEFxx devices on the same application in order to achieve a simultaneous enable/disable feature.

When a thermal fault occurs, the device can be reset either by cycling the supply voltage or by pulling down the Enable pin below the V_{il} threshold and then releasing it.

Figure 6. Enable/Fault pin status

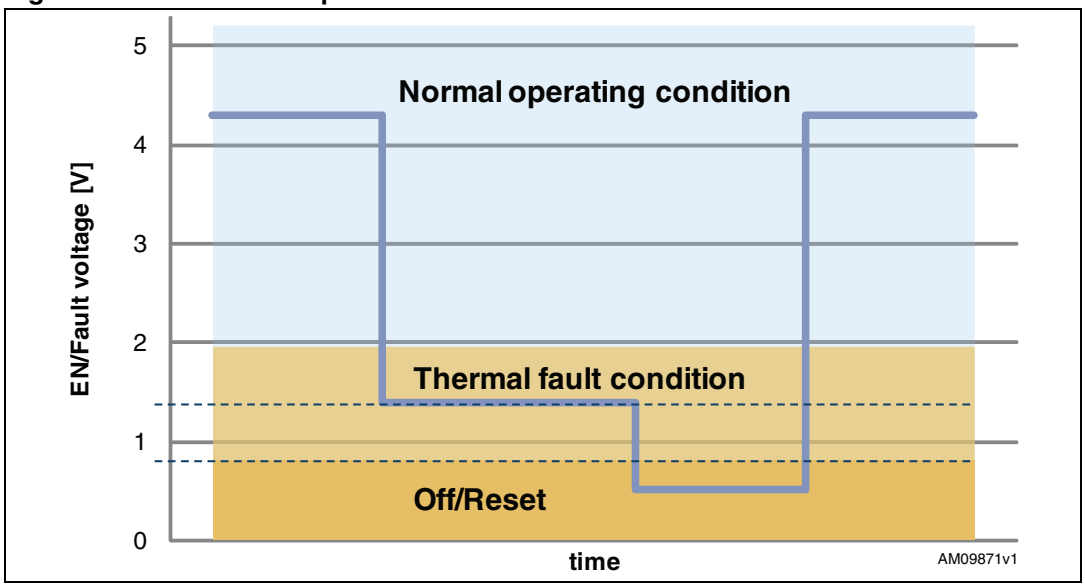

6 Typical performance characteristics

The following plots are referred to the typical application circuit and, unless otherwise noted, at T_A = 25 °C.

Figure 7. Clamping voltage vs. temperature

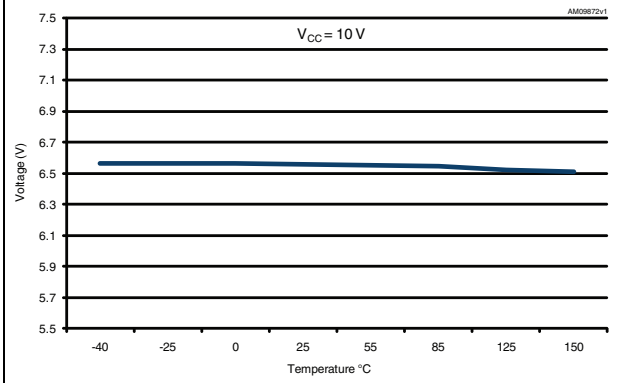

Figure 8. UVLO voltage vs. temperature

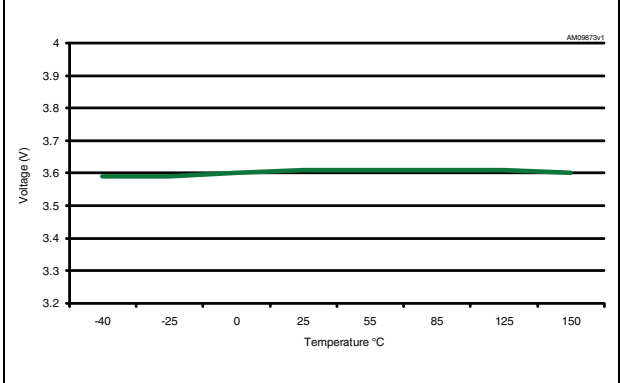

Figure 9. UVLO hysteresis vs. temperature

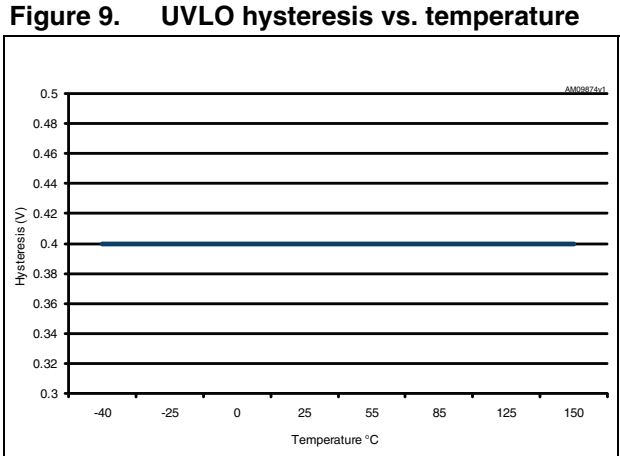

Figure 10. Off-state voltage vs. temperature

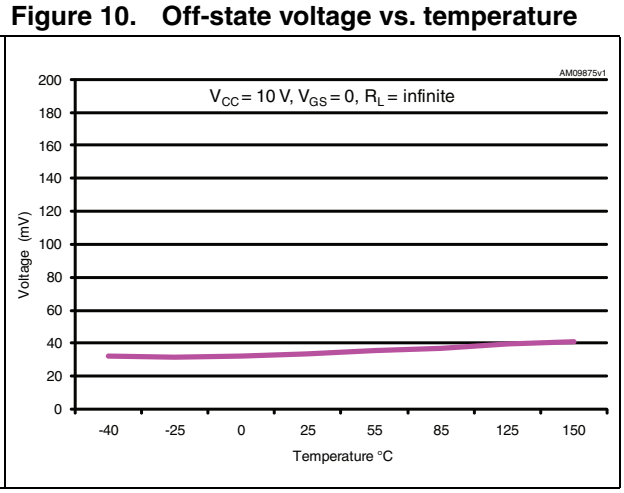

Figure 11. Bias current (device operational)

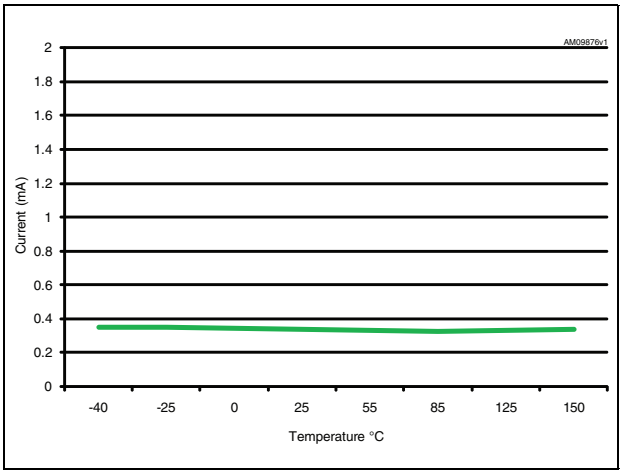

Figure 12. ON resistance vs. temperature

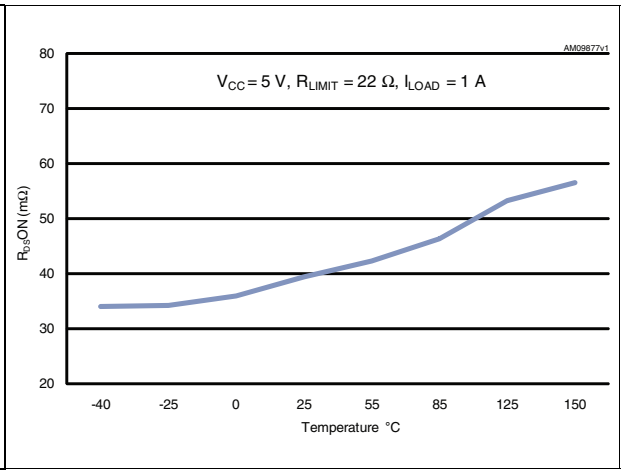

Figure 13. Current limit vs. R_{Limit}

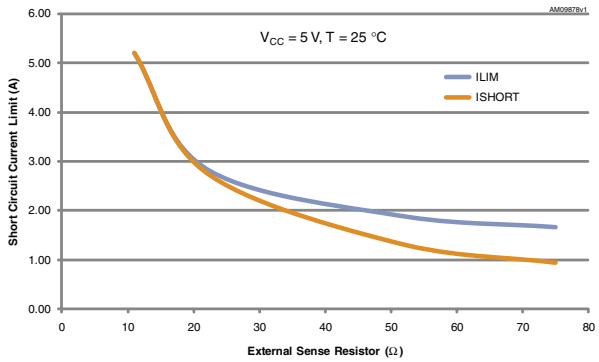

Figure 14. Thermal latch delay vs. power

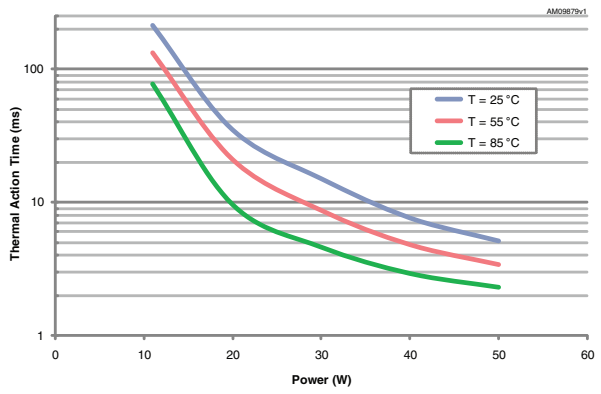

Figure 15. V_{OUT} ramp-up vs. Enable

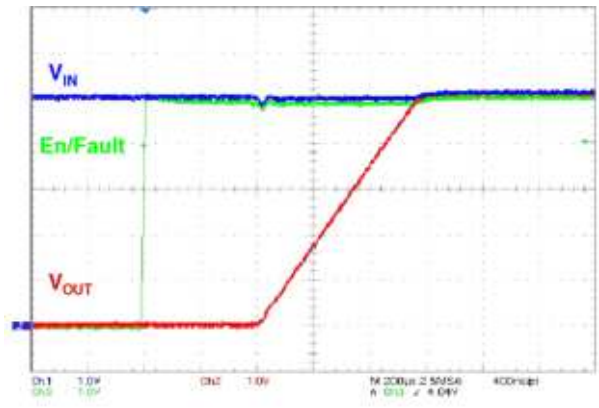

V_{CC} = 15 V, C_{IN} = 10 µF, C_{OUT} = 100 µF, R_{LIMIT} = 22 Ω, No $C_{dv/dt}$

Figure 16. V_{OUT} clamping

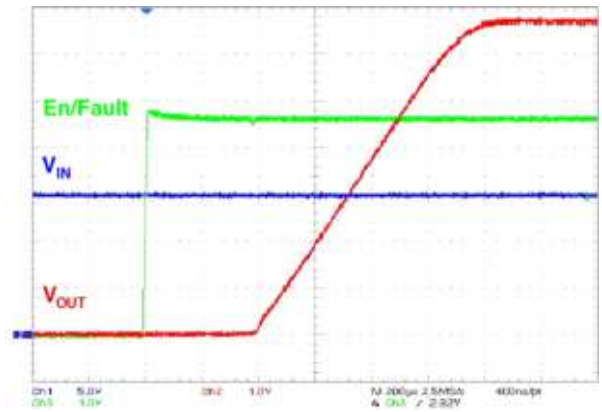

V_{CC} = 15 V, C_{IN} = 10 µF, C_{OUT} = 100 µF, R_{LIMIT} = 22 Ω, No $C_{dv/dt}$

Figure 17. Line transient

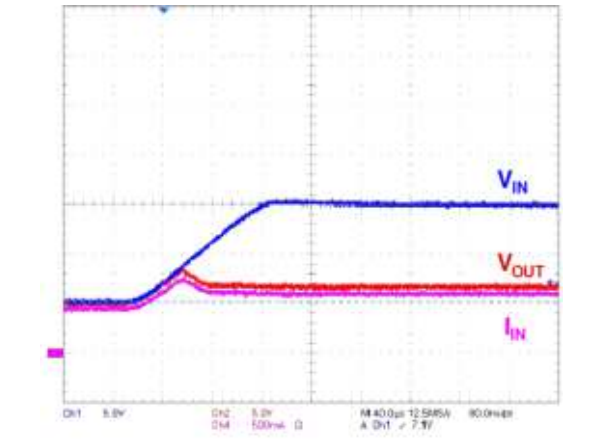

V_{CC} = from 5 to 15 V R_{LIMIT} = 22 Ω; I_{OUT} = 500 mA, T_{RISE} = 100 µs

Figure 18. Startup into output short-circuit

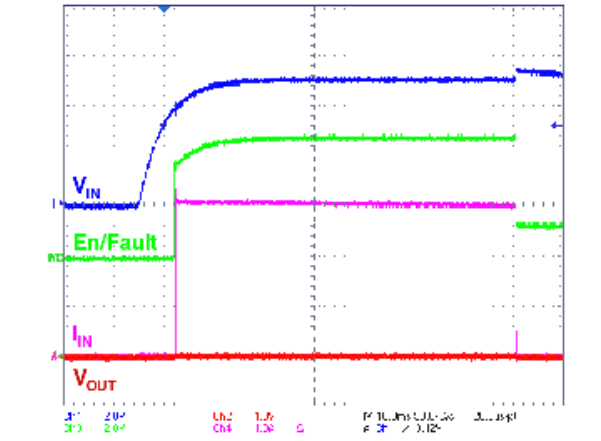

V_{CC} = 5 V, R_{LIMIT} = 22 Ω, V_{OUT} = Connected to GND

Figure 19. Thermal latch from 2 A load to short-circuit

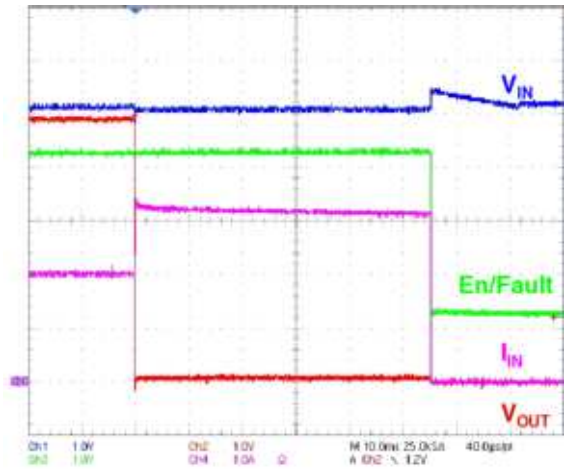

V_{CC} = 5 V, R_{LIMIT} = 22 Ω

Figure 20. Startup into output short-circuit (fast rise)

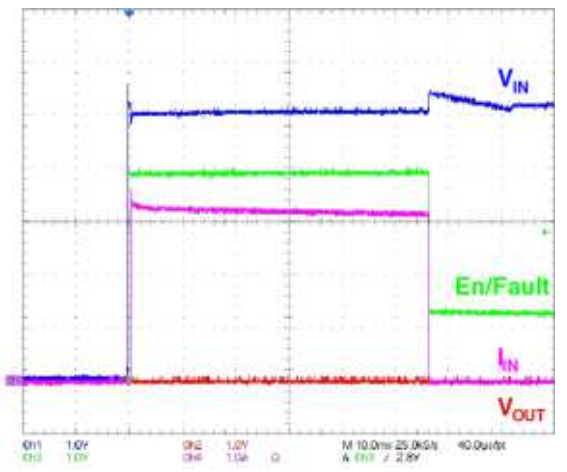

V_{CC} = 5 V, R_{LIMIT} = 22 Ω, V_{OUT} = Connected to GND

7 Package mechanical data

In order to meet environmental requirements, ST offers these devices in different grades of ECOPACK® packages, depending on their level of environmental compliance. ECOPACK® specifications, grade definitions and product status are available at: *www.st.com*. ECOPACK® is an ST trademark.

Table 7. DFN10L (3x3 mm.) mechanical data

Dim.	mm.		
	Min.	Typ.	Max.
A	0.80	0.90	1.00
A1		0.02	0.05
A2	0.55	0.65	0.80
A3		0.20	
b	0.18	0.25	0.30
D	2.85	3.00	3.15
D2	2.20		2.70
E	2.85	3.00	3.15
E2	1.40		1.75
E3	0.230		
E4	0.365		
e		0.50	
L	0.30	0.40	0.50
ddd			0.08

Figure 21. DFN10L package outline

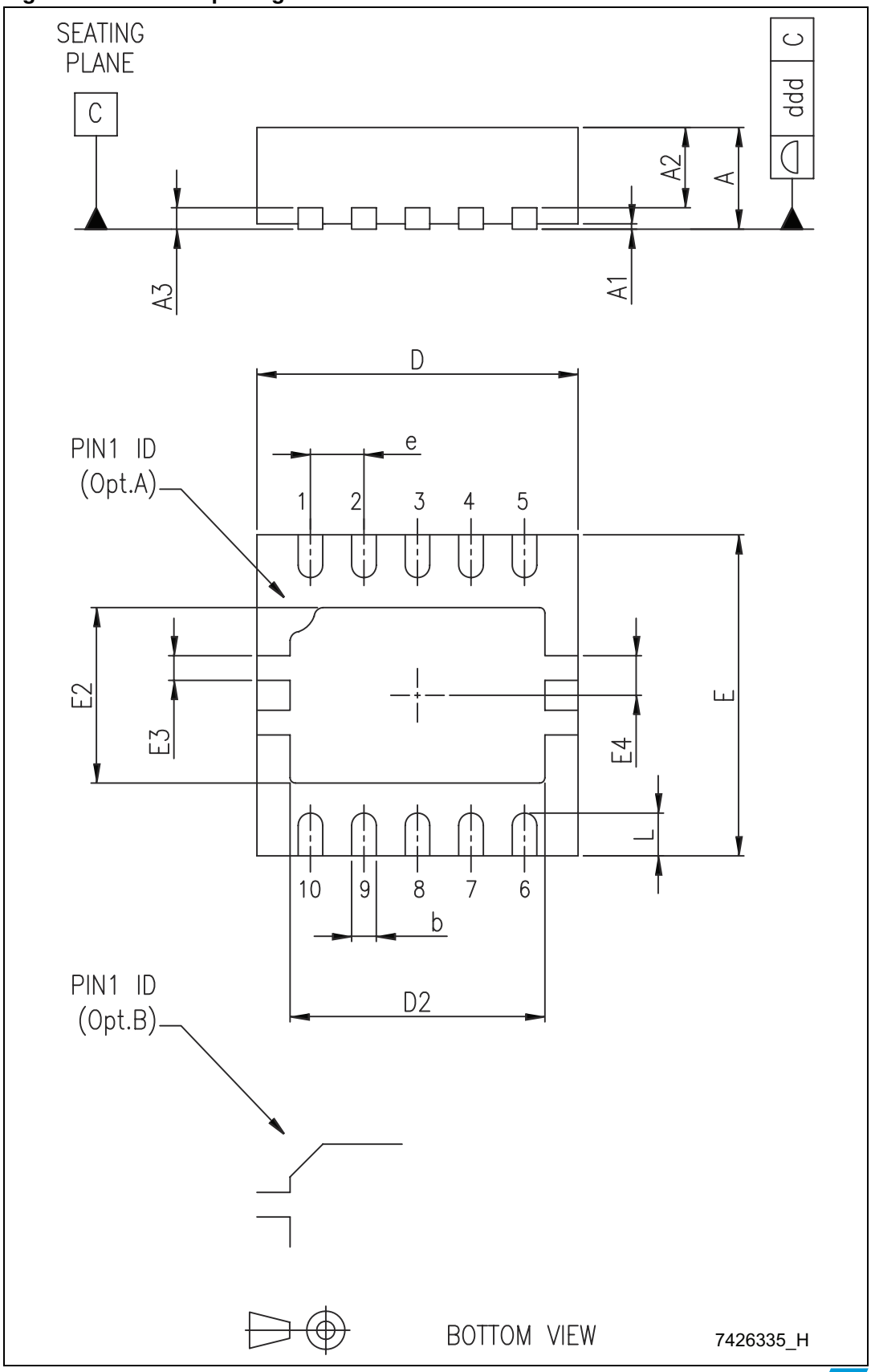

Tape and reel QFNxx/DFNxx (3x3 mm) mechanical data

Dim.	mm.			inch.		
	Min.	Typ.	Max.	Min.	Typ.	Max.
A			330			12.992
C	12.8		13.2	0.504		0.519
D	20.2			0.795		
N	60			2.362		
T			18.4			0.724
Ao		3.3			0.130	
Bo		3.3			0.130	
Ko		1.1			0.043	
Po		4			0.157	
P		8			0.315	

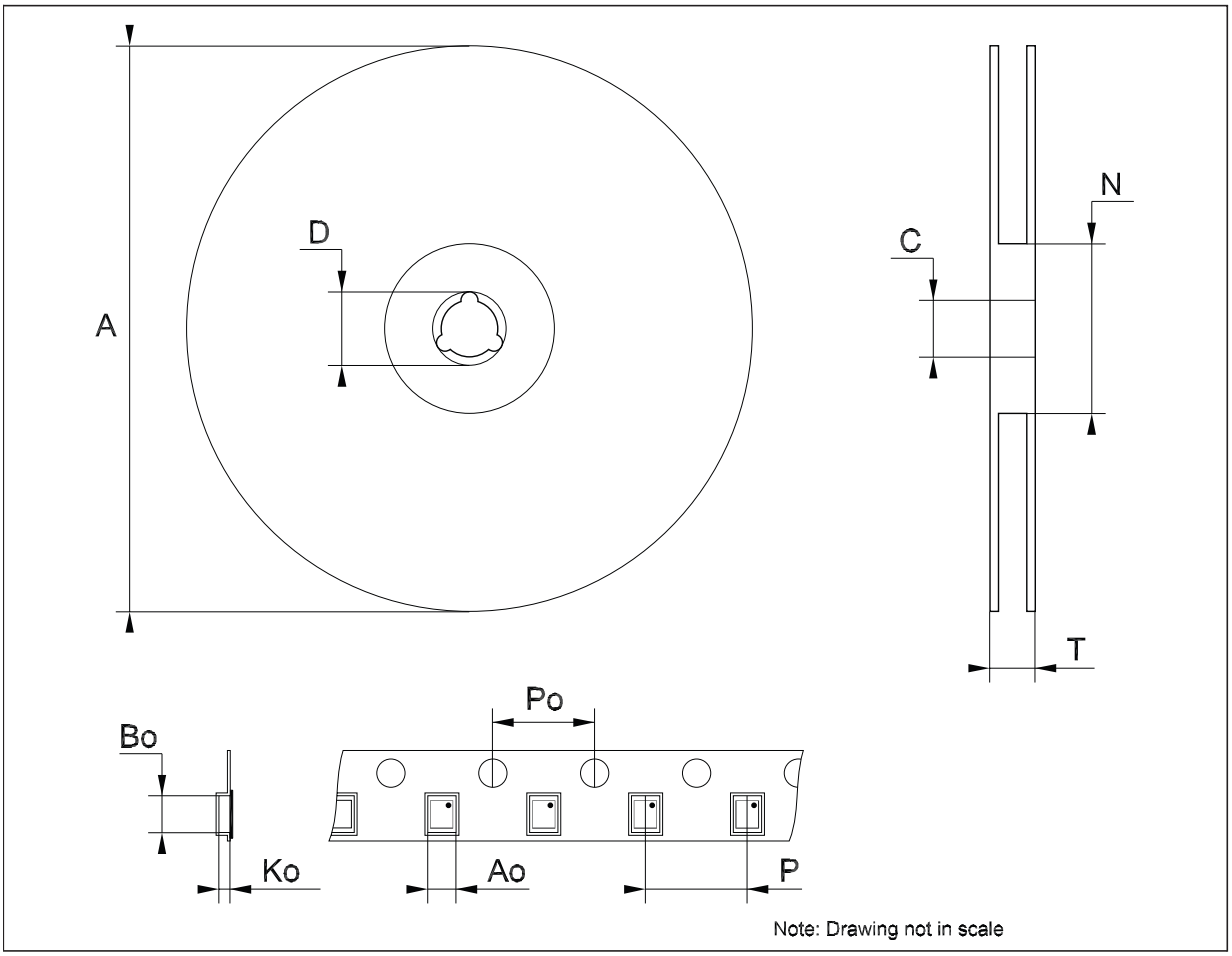

Figure 22. DFN10L footprint - recommended data (dimensions in mm.)

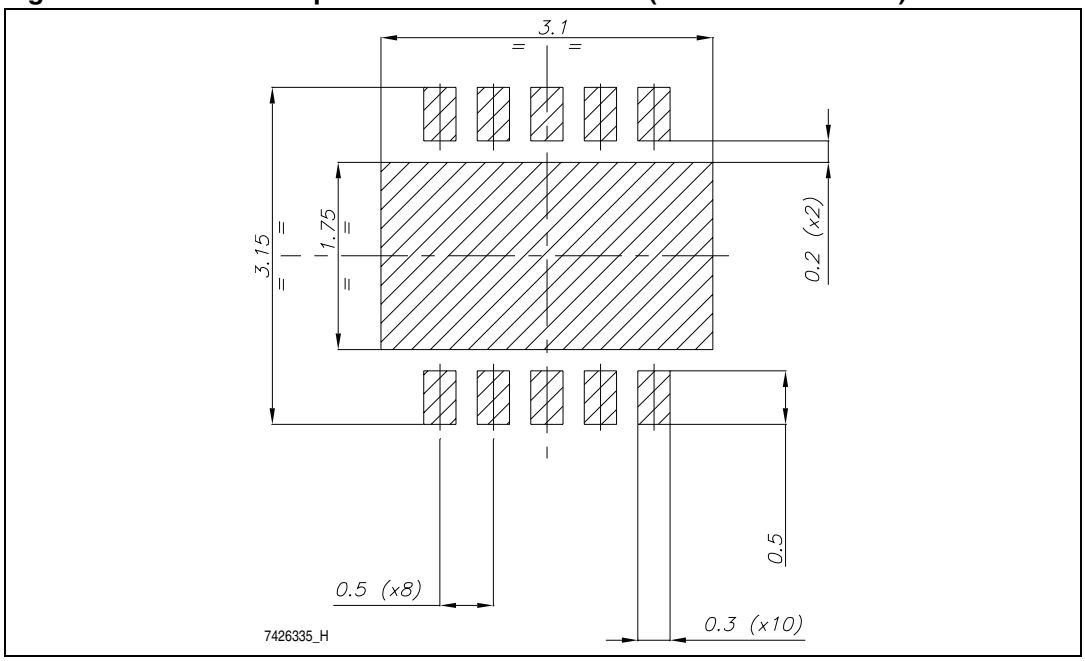

8 Revision history

Table 8. Document revision history

Date	Revision	Changes
15-Jul-2011	1	Initial release.
08-Aug-2011	2	Modified definition for T_{op} in *Table 3: Absolute maximum ratings*.
15-Dec-2011	3	Removed $V_{dv/dt}$ and $I_{dv/dt}$ rows from dv/dt circuit *Table 6 on page 6*.
06-Mar-2012	4	Updated: package mechanical data *Table 7 on page 15*, *Figure 21 on page 16* and *Figure 22 on page 18*.
14-Jan-2013	5	Updated: package mechanical data *Table 7 on page 15* and *Figure 21 on page 16*.

Please Read Carefully:

Information in this document is provided solely in connection with ST products. STMicroelectronics NV and its subsidiaries (“ST”) reserve the right to make changes, corrections, modifications or improvements, to this document, and the products and services described herein at any time, without notice.

All ST products are sold pursuant to ST’s terms and conditions of sale.

Purchasers are solely responsible for the choice, selection and use of the ST products and services described herein, and ST assumes no liability whatsoever relating to the choice, selection or use of the ST products and services described herein.

No license, express or implied, by estoppel or otherwise, to any intellectual property rights is granted under this document. If any part of this document refers to any third party products or services it shall not be deemed a license grant by ST for the use of such third party products or services, or any intellectual property contained therein or considered as a warranty covering the use in any manner whatsoever of such third party products or services or any intellectual property contained therein.

UNLESS OTHERWISE SET FORTH IN ST’S TERMS AND CONDITIONS OF SALE ST DISCLAIMS ANY EXPRESS OR IMPLIED WARRANTY WITH RESPECT TO THE USE AND/OR SALE OF ST PRODUCTS INCLUDING WITHOUT LIMITATION IMPLIED WARRANTIES OF MERCHANTABILITY, FITNESS FOR A PARTICULAR PURPOSE (AND THEIR EQUIVALENTS UNDER THE LAWS OF ANY JURISDICTION), OR INFRINGEMENT OF ANY PATENT, COPYRIGHT OR OTHER INTELLECTUAL PROPERTY RIGHT.

UNLESS EXPRESSLY APPROVED IN WRITING BY TWO AUTHORIZED ST REPRESENTATIVES, ST PRODUCTS ARE NOT RECOMMENDED, AUTHORIZED OR WARRANTED FOR USE IN MILITARY, AIR CRAFT, SPACE, LIFE SAVING, OR LIFE SUSTAINING APPLICATIONS, NOR IN PRODUCTS OR SYSTEMS WHERE FAILURE OR MALFUNCTION MAY RESULT IN PERSONAL INJURY, DEATH, OR SEVERE PROPERTY OR ENVIRONMENTAL DAMAGE. ST PRODUCTS WHICH ARE NOT SPECIFIED AS "AUTOMOTIVE GRADE" MAY ONLY BE USED IN AUTOMOTIVE APPLICATIONS AT USER’S OWN RISK.

Resale of ST products with provisions different from the statements and/or technical features set forth in this document shall immediately void any warranty granted by ST for the ST product or service described herein and shall not create or extend in any manner whatsoever, any liability of ST.

ST and the ST logo are trademarks or registered trademarks of ST in various countries.

Information in this document supersedes and replaces all information previously supplied.

The ST logo is a registered trademark of STMicroelectronics. All other names are the property of their respective owners.

© 2013 STMicroelectronics - All rights reserved

STMicroelectronics group of companies

Australia - Belgium - Brazil - Canada - China - Czech Republic - Finland - France - Germany - Hong Kong - India - Israel - Italy - Japan - Malaysia - Malta - Morocco - Philippines - Singapore - Spain - Sweden - Switzerland - United Kingdom - United States of America

www.st.com