STGP30H60DF

Datasheet

Trench gate field-stop 600 V, 30 A high speed IGBT

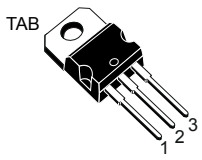

TO-220

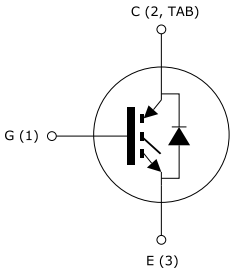

Features

- High speed switching
- Tight parameters distribution
- Safe paralleling
- Low thermal resistance
- Short circuit rated
- Ultrafast soft recovery antiparallel diode

Applications

- Inverter
- UPS
- PFC

Description

This device is an IGBT developed using an advanced proprietary trench gate field-stop structure. This IGBT series offers the optimum compromise between conduction and switching losses, maximizing the efficiency of high frequency converters. Furthermore, the positive $V_{CE(sat)}$ temperature coefficient and the tight parameter distribution result in safer paralleling operation.

Product status link
STGP30H60DF

Product summary	
Order code	STGP30H60DF
Marking	GP30H60DF
Package	TO-220
Packing	Tube

1 Electrical ratings

Table 1. Absolute maximum ratings

Symbol	Parameter	Value	Unit
V_{CES}	Collector-emitter voltage (V_{GE} = 0 V)	600	V
I_C	Continuous collector current at T_C = 25 °C	60	A
	Continuous collector current at T_C = 100 °C	30	
I_{CP}(1)	Pulsed collector current	120	A
V_{GE}	Gate-emitter voltage	±20	V
I_F	Continuous forward current at T_C = 25 °C	60	A
	Continuous forward current at T_C = 100 °C	30	
I_{FP}(1)	Pulsed forward current	120	A
P_{TOT}	Total power dissipation at T_C = 25 °C	260	W
T_{stg}	Storage temperature range	- 55 to 150	°C
T_J	Operating junction temperature range	- 55 to 175	°C

1. *Pulse width limited by maximum junction temperature and turn-off within RBSOA.*

Table 2. Thermal data

Symbol	Parameter	Value	Unit
R_{thJC}	Thermal resistance junction-case IGBT	0.58	°C/W
	Thermal resistance junction-case diode	2.5	
R_{thJA}	Thermal resistance junction-ambient	62.5	°C/W

2 Electrical characteristics

T_C = 25 °C unless otherwise specified

Table 3. Static characteristics

Symbol	Parameter	Test conditions	Min.	Typ.	Max.	Unit
$V_{(BR)CES}$	Collector-emitter breakdown voltage	V_{GE} = 0 V, I_C = 2 mA	600			V
$V_{CE(sat)}$	Collector-emitter saturation voltage	V_{GE} = 15 V, I_C = 30 A		2.0	2.4	V
		V_{GE} = 15 V, I_C = 30 A, T_J = 175 °C		2.4		
$V_{GE(th)}$	Gate threshold voltage	V_{CE} = V_{GE}, I_C = 1 mA	5	6	7	V
I_{CES}	Collector cut-off current	V_{GE} = 0 V, V_{CE} = 600 V			25	µA
I_{GES}	Gate-emitter leakage current	V_{CE} = 0 V, V_{GE} = ±20 V			±250	nA

Table 4. Dynamic characteristics

Symbol	Parameter	Test conditions	Min.	Typ.	Max.	Unit
C_{ies}	Input capacitance	V_{CE} = 25 V, f = 1 MHz, V_{GE} = 0 V	-	3600	-	pF
C_{oes}	Output capacitance		-	130	-	pF
C_{res}	Reverse transfer capacitance		-	65	-	pF
Q_g	Total gate charge	V_{CC} = 400 V, I_C = 30 A, V_{GE} = 0 to 15 V (see Figure 20. Gate charge test circuit)	-	105	-	nC
Q_{ge}	Gate-emitter charge		-	30	-	nC
Q_{gc}	Gate-collector charge		-	35	-	nC

Table 5. Switching characteristics (inductive load)

Symbol	Parameter	Test conditions	Min.	Typ.	Max.	Unit
$t_{d(on)}$	Turn-on delay time	V_{CE} = 400 V, I_C = 30 A,		50	-	ns
t_r	Current rise time	R_G = 10 Ω, V_{GE} = 15 V		15	-	ns
$(di/dt)_{on}$	Turn-on current slope	(see Figure 19. Test circuit for inductive load switching)		1600	-	A/µs
$t_{d(on)}$	Turn-on delay time	V_{CE} = 400 V, I_C = 30 A,		47	-	ns
t_r	Current rise time	R_G = 10 Ω, V_{GE} = 15 V, T_J = 175 °C		17	-	ns
$(di/dt)_{on}$	Turn-on current slope	(see Figure 19. Test circuit for inductive load switching)		1400	-	A/µs
$t_r(V_{off})$	Off voltage rise time	V_{CE} = 400 V, I_C = 30 A,		20	-	ns
$t_{d(off)}$	Turn-off delay time	R_G = 10 Ω, V_{GE} = 15 V		160	-	ns
t_f	Current fall time	(see Figure 19. Test circuit for inductive load switching)		60	-	ns
$t_r(V_{off})$	Off voltage rise time	V_{CE} = 400 V, I_C = 30 A,		22	-	ns
$t_{d(off)}$	Turn-off delay time	R_G = 10 Ω, V_{GE} = 15 V, T_J = 175 °C		146	-	ns
t_f	Current fall time	(see Figure 19. Test circuit for inductive load switching)		88	-	ns
tsc	Short circuit withstand time	V_{CC} ≤ 360 V, V_{GE} = 15 V	3	6	-	µs

Table 6. Switching energy (inductive load)

Symbol	Parameter	Test conditions	Min.	Typ.	Max.	Unit
E_{on} (1)	Turn-on switching losses	V_{CE} = 400 V, I_C = 30 A,	-	0.35	-	mJ
E_{off} (2)	Turn-off switching losses	R_G = 10 Ω, V_{GE} = 15 V	-	0.40	-	mJ
E_{ts}	Total switching losses	(see Figure 19. Test circuit for inductive load switching)	-	0.75	-	mJ
E_{on} (1)	Turn-on switching losses	V_{CE} = 400 V, I_C = 30 A,	-	0.84	-	mJ
E_{off} (2)	Turn-off switching losses	R_G = 10 Ω, V_{GE} = 15 V, T_J = 175 °C	-	0.61	-	mJ
E_{ts}	Total switching losses	(see Figure 19. Test circuit for inductive load switching)	-	1.45	-	mJ

1. *Energy losses include reverse recovery of the diode.*
2. *Turn-off losses include also the tail of the collector current.*

Table 7. Collector-emitter diode

Symbol	Parameter	Test conditions	Min.	Typ.	Max.	Unit
V_F	Forward on-voltage	I_F = 30 A	-	2.0	2.3	V
		I_F = 30 A, T_J = 175 °C	-	1.5		
t_{rr}	Reverse recovery time	V_r = 400 V, I_F = 30 A, di_F/dt = 100 A/µs	-	110		ns
Q_{rr}	Reverse recovery charge		-	136		nC
I_{rrm}	Reverse recovery current		-	2.5		A
t_{rr}	Reverse recovery time	V_r = 400 V, I_F = 30 A, di_F/dt = 100 A/µs, T_J = 175 °C	-	190		ns
Q_{rr}	Reverse recovery charge		-	506		nC
I_{rrm}	Reverse recovery current		-	5.3		A

2.1 Electrical characteristics (curves)

Figure 1. Output characteristics (T_J = 25 °C)

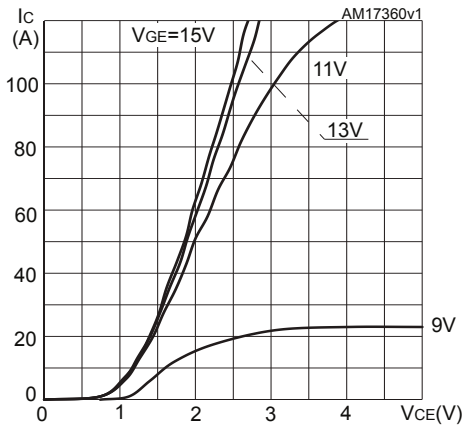

Figure 2. Output characteristics (T_J = 175 °C)

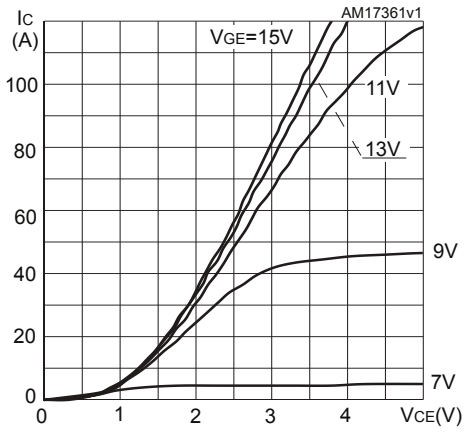

Figure 3. Transfer characteristics

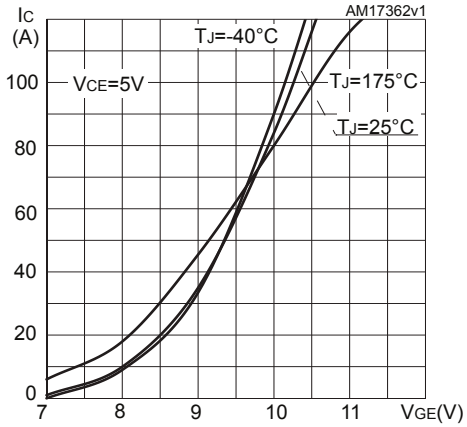

Figure 4. Normalized $V_{GE(th)}$ vs junction temperature

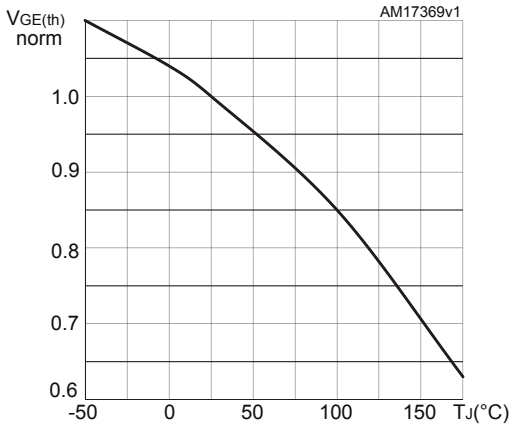

Figure 5. Power dissipation vs case temperature

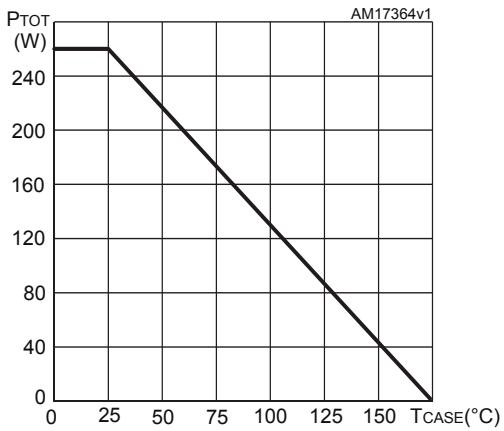

Figure 6. Collector current vs switching frequency

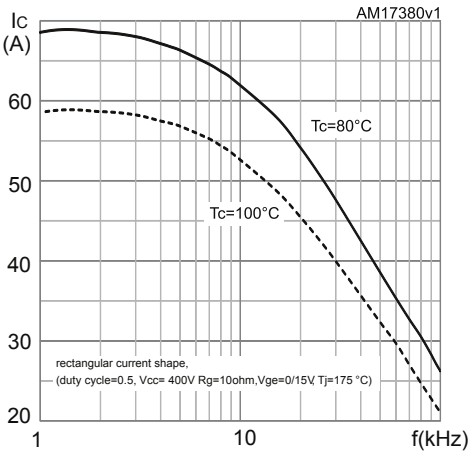

Figure 7. $V_{CE(sat)}$ vs junction temperature

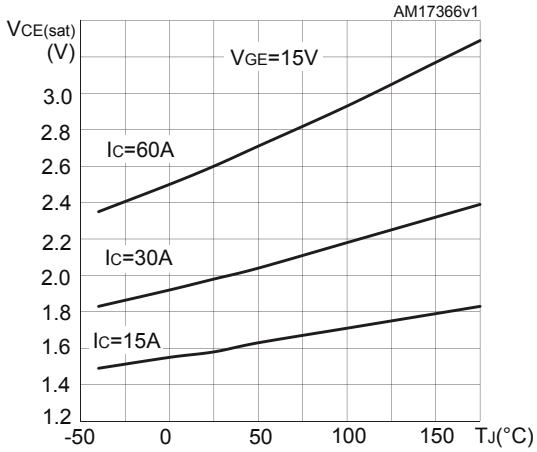

Figure 8. $V_{CE(sat)}$ vs collector current

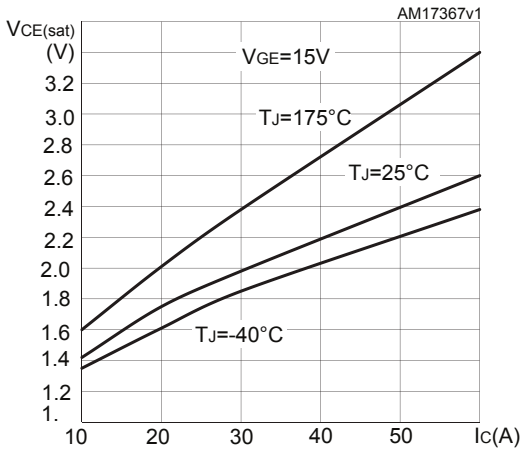

Figure 9. Forward bias safe operating area

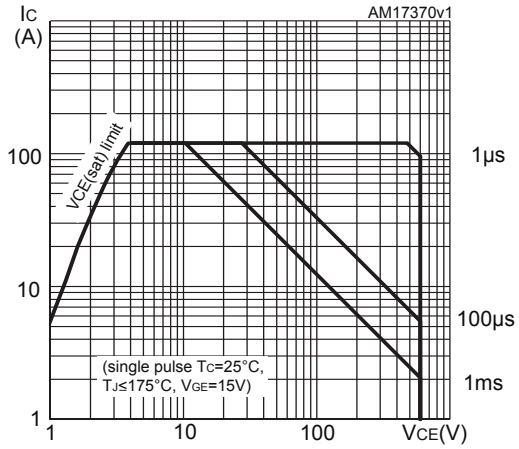

Figure 10. Thermal impedance

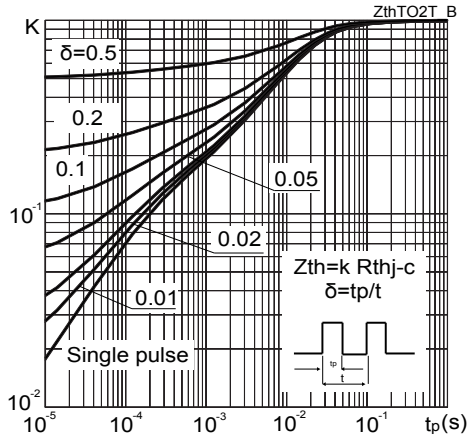

Figure 11. Gate charge vs gate-emitter voltage

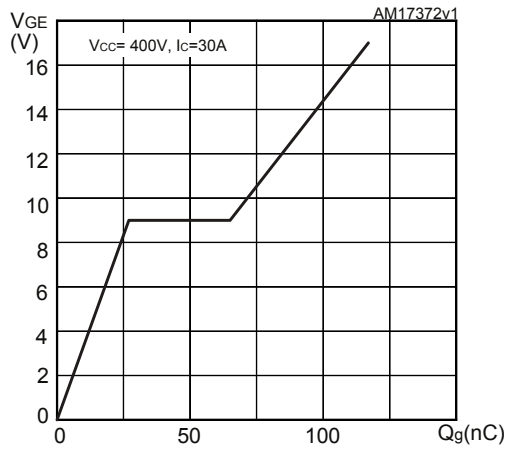

Figure 12. Capacitance variations

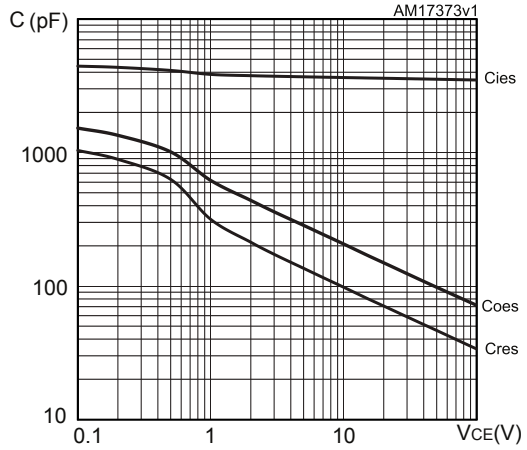

Figure 13. Collector current vs case temperature

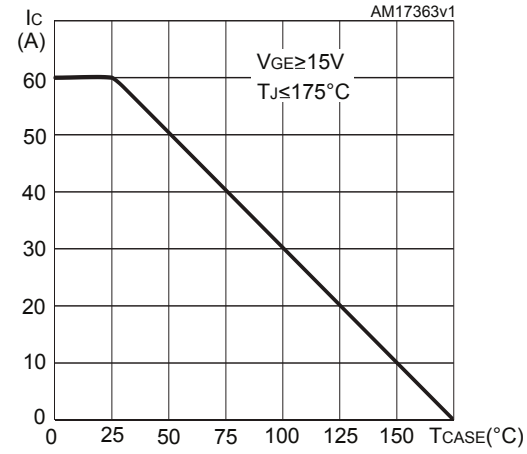

Figure 14. Diode V_F vs forward current

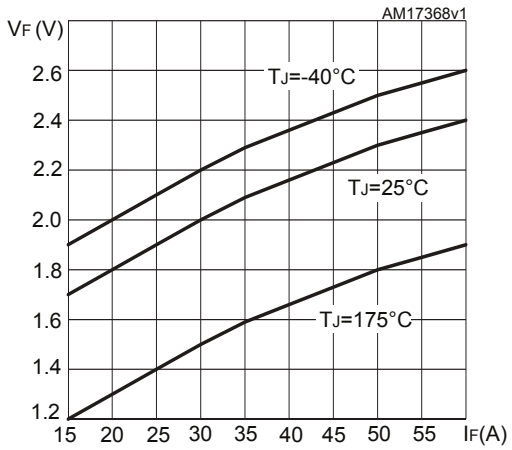

Figure 15. Switching losses vs gate resistance

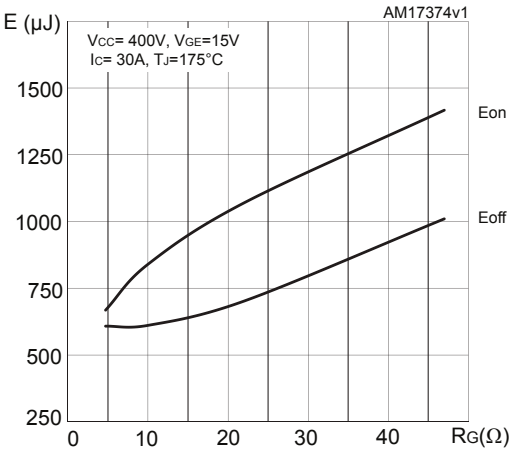

Figure 16. Switching losses vs collector current

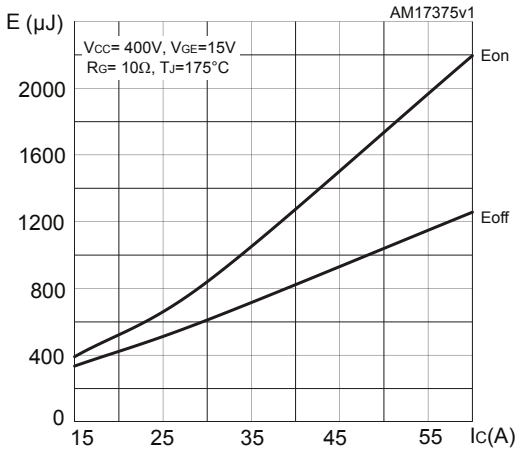

Figure 17. Switching energy vs temperature

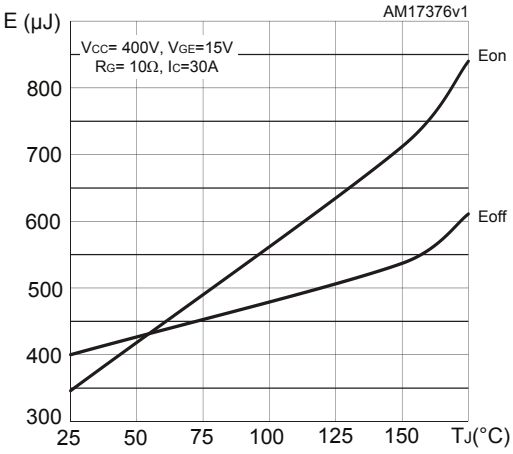

Figure 18. Short circuit time & current vs. V_{GE}

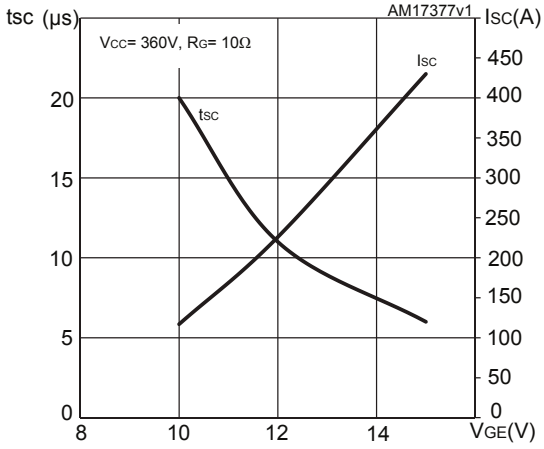

3 Test circuits

Figure 19. Test circuit for inductive load switching

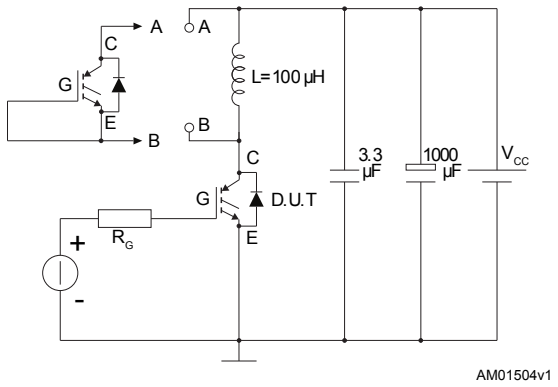

Figure 20. Gate charge test circuit

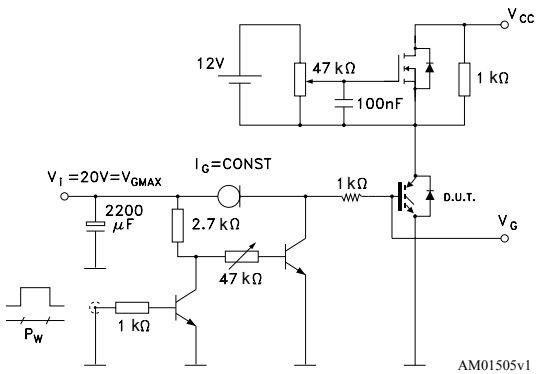

Figure 21. Switching waveform

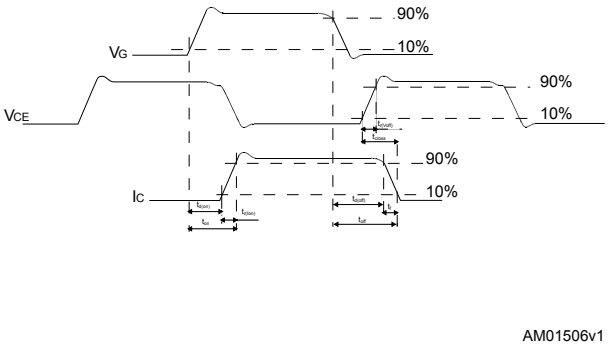

Figure 22. Diode reverse recovery waveform

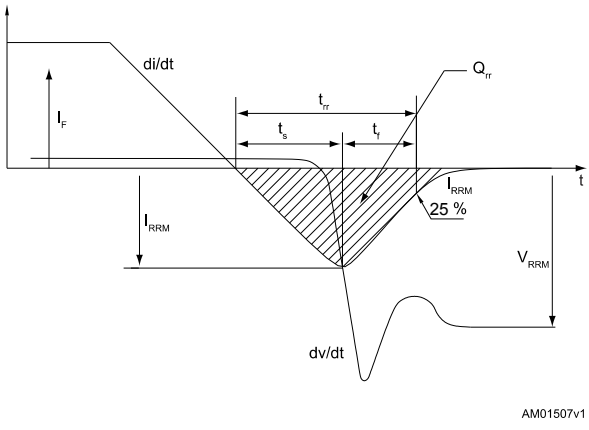

4 Package information

In order to meet environmental requirements, ST offers these devices in different grades of ECOPACK packages, depending on their level of environmental compliance. ECOPACK specifications, grade definitions and product status are available at: www.st.com. ECOPACK is an ST trademark.

4.1 TO-220 type A package information

Figure 23. **TO-220 type A package outline**

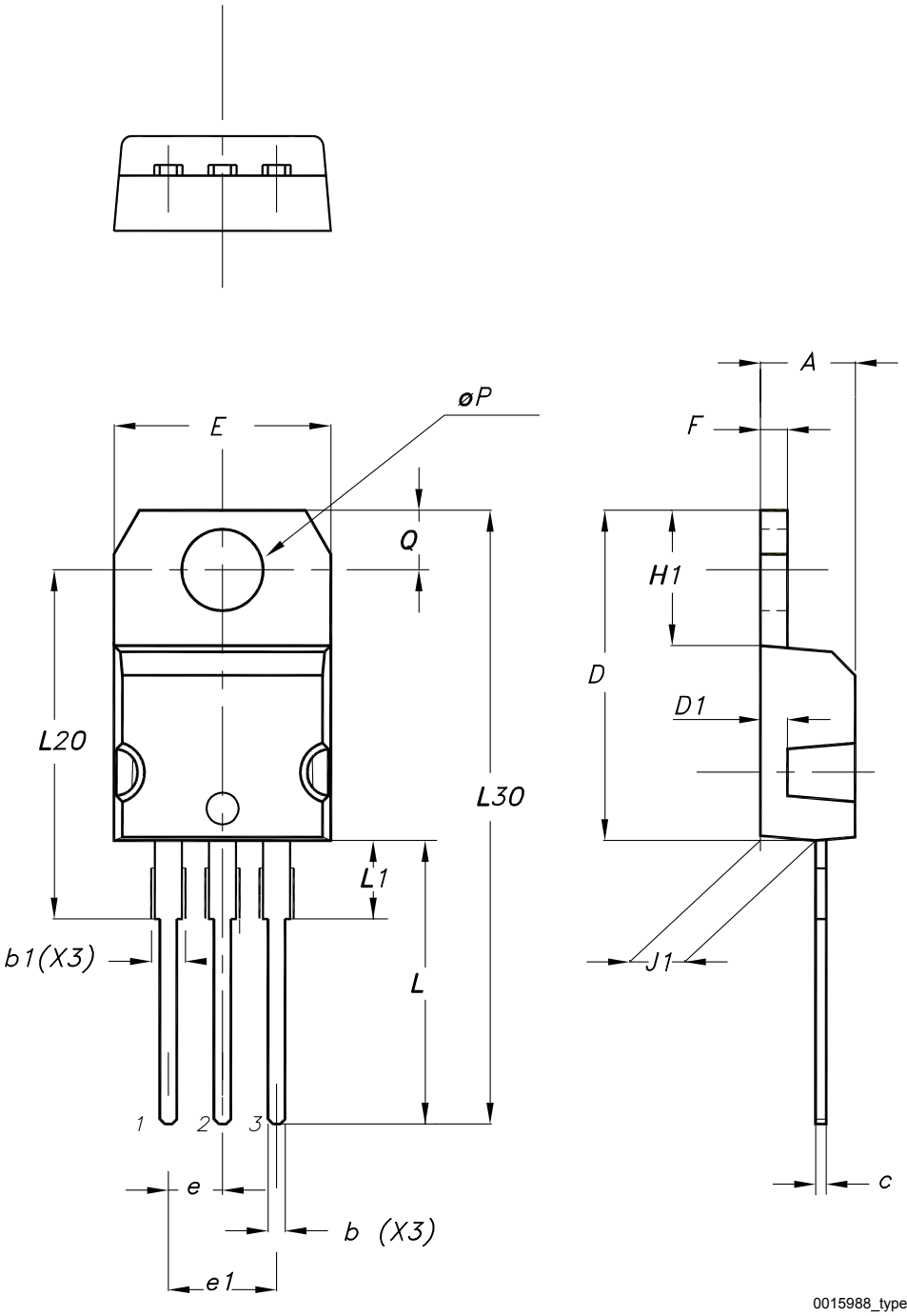

Table 8. **TO-220 type A package mechanical data**

Dim.	mm		
	Min.	Typ.	Max.
A	4.40		4.60
b	0.61		0.88
b1	1.14		1.55
c	0.48		0.70
D	15.25		15.75
D1		1.27	
E	10.00		10.40
e	2.40		2.70
e1	4.95		5.15
F	1.23		1.32
H1	6.20		6.60
J1	2.40		2.72
L	13.00		14.00
L1	3.50		3.93
L20		16.40	
L30		28.90	
øP	3.75		3.85
Q	2.65		2.95
Slug flatness		0.03	0.10

Revision history

Table 9. **Document revision history**

Date	Revision	Changes
14-Oct-2011	1	Initial release.
03-Oct-2012	2	Document status promoted from target specification to preliminary data.
20-Mar-2013	3	Document status promoted from preliminary data to production data. Added new root part number STGF30H60DF in TO-220FP package. Added new root part number STGW30H60DF in TO-247 package.
24-Sep-2020	4	The part numbers STGB30H60DF, STGF30H60DF and STGW30H60DF have been moved to a separate datasheet and the document has been updated accordingly. Updated Table 5. Switching characteristics (inductive load) and Table 7. Collector-emitter diode. Minor text changes.

Contents

1 **Electrical ratings** 2
2 **Electrical characteristics** 3
2.1 Electrical characteristics (curves) 6
3 **Test circuits** 9
4 **Package information** 10
4.1 TO-220 type A package information 10
Revision history 12

IMPORTANT NOTICE – PLEASE READ CAREFULLY

STMicroelectronics NV and its subsidiaries (“ST”) reserve the right to make changes, corrections, enhancements, modifications, and improvements to ST products and/or to this document at any time without notice. Purchasers should obtain the latest relevant information on ST products before placing orders. ST products are sold pursuant to ST’s terms and conditions of sale in place at the time of order acknowledgement.

Purchasers are solely responsible for the choice, selection, and use of ST products and ST assumes no liability for application assistance or the design of Purchasers’ products.

No license, express or implied, to any intellectual property right is granted by ST herein.

Resale of ST products with provisions different from the information set forth herein shall void any warranty granted by ST for such product.

ST and the ST logo are trademarks of ST. For additional information about ST trademarks, please refer to www.st.com/trademarks. All other product or service names are the property of their respective owners.

Information in this document supersedes and replaces information previously supplied in any prior versions of this document.

© 2020 STMicroelectronics – All rights reserved