M95160 M95160-W
M95160-R M95160-DF

16-Kbit serial SPI bus EEPROM with high-speed clock

Datasheet - production data

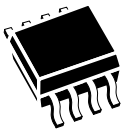

SO8 (MN)
150 mil width



TSSOP8 (DW)
169 mil width

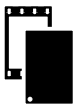

UFDFPN8 (MC)
2 x 3 mm



WLCSP (CS)

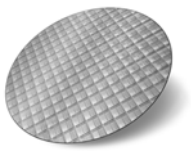

Unsawn wafer

Features

- Compatible with the Serial Peripheral Interface (SPI) bus
- Memory array
  - 16 Kb (2 Kbytes) of EEPROM
  - Page size: 32 bytes
  - Additional Write lockable Page (Identification page)
- Write
  - Byte Write within 5 ms
  - Page Write within 5 ms
- Write Protect: quarter, half or whole memory array
- High-speed clock: 20 MHz
- Single supply voltage:
  - 2.5 V to 5.5 V for M95160-W
  - 1.8 V to 5.5 V for M95160-R
  - 1.7 V to 5.5 V for M95160-DF
- Operating temperature range: from -40°C up to +85°C
- Enhanced ESD protection
- More than 4 million Write cycles
- More than 200-year data retention
- Packages:
  - SO8 (ECOPACK2®)
  - TSSOP8 (ECOPACK2®)
  - UFDFPN8 (ECOPACK2®)
  - WLCSP (ECOPACK2®)
  - Unsawn wafer (each die is tested)

This is information on a product in full production. www.st.com

Contents

1 **Description** 6

2 **Memory organization** 8

3 **Signal description** 9

3.1 Serial Data Output (Q) 9

3.2 Serial Data Input (D) 9

3.3 Serial Clock (C) 9

3.4 Chip Select ($\overline{S}$) 9

3.5 Hold ($\overline{HOLD}$) 9

3.6 Write Protect ($\overline{W}$) 10

3.7 V_{CC} supply voltage 10

3.8 V_{SS} ground 10

4 **Connecting to the SPI bus** 11

4.1 SPI modes 12

5 **Operating features** 13

5.1 Supply voltage (V_{CC}) 13

5.1.1 Operating supply voltage (V_{CC}) 13

5.1.2 Device reset 13

5.1.3 Power-up conditions 13

5.1.4 Power-down 14

5.2 Active Power and Standby Power modes 14

5.3 Hold condition 14

5.4 Status Register 15

5.5 Data protection and protocol control 15

6 **Instructions** 16

6.1 Write Enable (WREN) 17

6.2 Write Disable (WRDI) 18

6.3 Read Status Register (RDSR) 19

6.3.1 WIP bit 19

6.3.2 WEL bit . . . 19
6.3.3 BP1, BP0 bits . . . 19
6.3.4 SRWD bit . . . 20
6.4 Write Status Register (WRSR) . . . 21
6.5 Read from Memory Array (READ) . . . 23
6.6 Write to Memory Array (WRITE) . . . 24
6.7 Read Identification Page (available only in M95160-D devices) . . . 26
6.8 Write Identification Page (available only in M95160-D devices) . . . 27
6.9 Read Lock Status (available only in M95160-D devices) . . . 28
6.10 Lock ID (available only in M95160-D devices) . . . 29

7 Power-up and delivery state . . . 30
7.1 Power-up state . . . 30
7.2 Initial delivery state . . . 30

8 Maximum ratings . . . 31

9 DC and AC parameters . . . 32

10 Package information . . . 41
10.1 SO8N package information . . . 41
10.2 TSSOP8 package information . . . 43
10.3 UFDFN8 package information . . . 44
10.4 WLCSP package information . . . 46

11 Part numbering . . . 48

12 Revision history . . . 51

List of tables

Table 1. Signal names . . . 6
Table 2. Write-protected block size . . . 15
Table 3. Instruction set . . . 16
Table 4. Significant bits within the two address bytes . . . 16
Table 5. Status Register format . . . 20
Table 6. Protection modes . . . 22
Table 7. Absolute maximum ratings . . . 31
Table 8. Operating conditions (M95160-W, device grade 6) . . . 32
Table 9. Operating conditions (M95160-R, device grade 6) . . . 32
Table 10. Operating conditions (M95160-DF, device grade 6) . . . 32
Table 11. AC measurement conditions . . . 32
Table 12. Cycling performance . . . 33
Table 13. Memory cell data retention . . . 33
Table 14. Capacitance . . . 33
Table 15. DC characteristics (M95160-W, device grade 6) . . . 34
Table 16. DC characteristics (M95160-R or M95160-DF, device grade 6) . . . 35
Table 17. AC characteristics (M95160-W, device grade 6) . . . 36
Table 18. AC characteristics (M95160-R or M95160-DF, device grade 6) . . . 37
Table 19. AC characteristics (M95160-F, device grade 6) . . . 38
Table 20. AC characteristics (M95160-W, device grade 6)
End of life products: these values apply only to M95160-WMN6TP/S
and M95160-WDW6TP/S devices) . . . 39
Table 21. SO8N – 8-lead plastic small outline, 150 mils body width,
package mechanical data . . . 41
Table 22. TSSOP8 – 8-lead thin shrink small outline, 3 x 4.4 mm, 0.5 mm pitch,
package mechanical data . . . 43
Table 23. UFDFN8 - 8-lead, 2 × 3 mm, 0.5 mm pitch ultra thin profile fine pitch dual flat
package mechanical data . . . 44
Table 24. WLCSP - 8-bump, 1.350 x 1.365 mm, 0.4 mm pitch wafer level chip scale
package mechanical data . . . 46
Table 25. Ordering information scheme . . . 48
Table 26. Ordering information scheme (unsawn wafer) . . . 49
Table 27. Document revision history . . . 51

List of figures

Figure 1. Logic diagram . . . 6
Figure 2. 8-pin package connections (top view) . . . 7
Figure 3. WLCSP connections (top view, marking side, with bumps on the underside) . . . 7
Figure 4. Block diagram . . . 8
Figure 5. Bus master and memory devices on the SPI bus . . . 11
Figure 6. SPI modes supported . . . 12
Figure 7. Hold condition activation . . . 14
Figure 8. Write Enable (WREN) sequence . . . 17
Figure 9. Write Disable (WRDI) sequence . . . 18
Figure 10. Read Status Register (RDSR) sequence . . . 19
Figure 11. Write Status Register (WRSR) sequence . . . 21
Figure 12. Read from Memory Array (READ) sequence . . . 23
Figure 13. Byte Write (WRITE) sequence . . . 24
Figure 14. Page Write (WRITE) sequence . . . 25
Figure 15. Read Identification Page sequence . . . 26
Figure 16. Write identification page sequence . . . 27
Figure 17. Read Lock Status sequence . . . 28
Figure 18. Lock ID sequence . . . 29
Figure 19. AC measurement I/O waveform . . . 32
Figure 20. Serial input timing . . . 40
Figure 21. Hold timing . . . 40
Figure 22. Serial output timing . . . 40
Figure 23. SO8N – 8-lead plastic small outline, 150 mils body width, package outline . . . 41
Figure 24. SO8N – 8-lead plastic small outline, 150 mils body width, package recommended footprint . . . 42
Figure 25. TSSOP8 – 8-lead thin shrink small outline, 3 x 4.4 mm, 0.5 mm pitch, package outline . . . 43
Figure 26. UFDFN8 - 8-lead, 2 × 3 mm, 0.5 mm pitch ultra thin profile fine pitch dual flat package outline . . . 44
Figure 27. WLCSP - 8-bump, 1.350 x 1.365 mm, 0.4 mm pitch wafer level chip scale package outline . . . 46
Figure 28. WLCSP - 8-bump, 1.350 x 1.365 mm, 0.4 mm pitch wafer level chip scale package recommended footprint . . . 47

1 Description

The M95160 devices are Electrically Erasable PROgrammable Memories (EEPROMs) organized as 2048 x 8 bits, accessed through the SPI bus.

The M95160-W can operate with a supply voltage from 2.5 V to 5.5 V, the M95160-R can operate with a supply voltage from 1.8 V to 5.5 V, and the M95160-DF can operate with a supply voltage from 1.7 V to 5.5 V, over an ambient temperature range of -40 °C / +85 °C.

The M95160-D offers an additional page, named the Identification Page (32 bytes). The Identification Page can be used to store sensitive application parameters which can be (later) permanently locked in Read-only mode.

Figure 1. Logic diagram

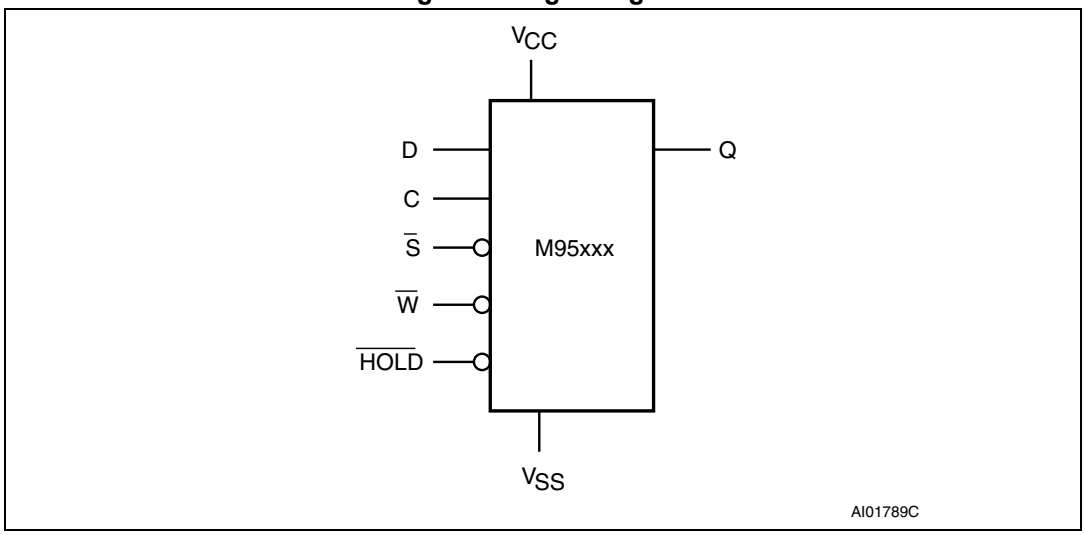

The SPI bus signals are C, D and Q, as shown in *Figure 1* and *Table 1*. The device is selected when Chip Select ($\overline{S}$) is driven low. Communications with the device can be interrupted when the $\overline{HOLD}$ is driven low.

Table 1. Signal names

Signal name	Function	Direction
C	Serial Clock	Input
D	Serial Data Input	Input
Q	Serial Data Output	Output
$\overline{S}$	Chip Select	Input
W	Write Protect	Input
$\overline{HOLD}$	Hold	Input
V_{CC}	Supply voltage	-
V_{SS}	Ground	-

Figure 2. 8-pin package connections (top view)

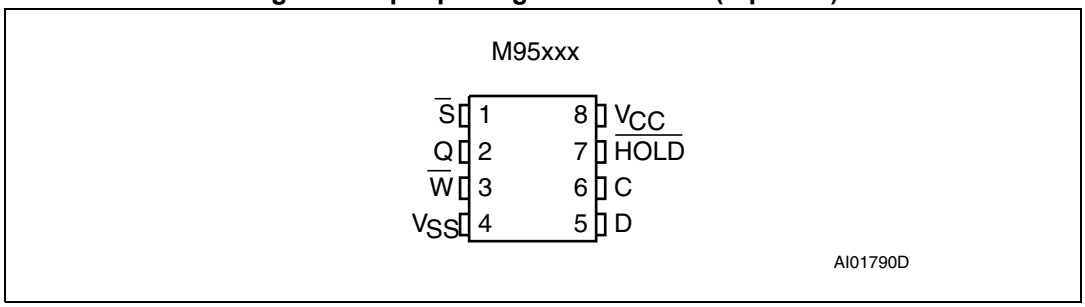

1. See *Section 10: Package information* for package dimensions, and how to identify pin-1.

Figure 3. WLCSP connections (top view, marking side, with bumps on the underside)

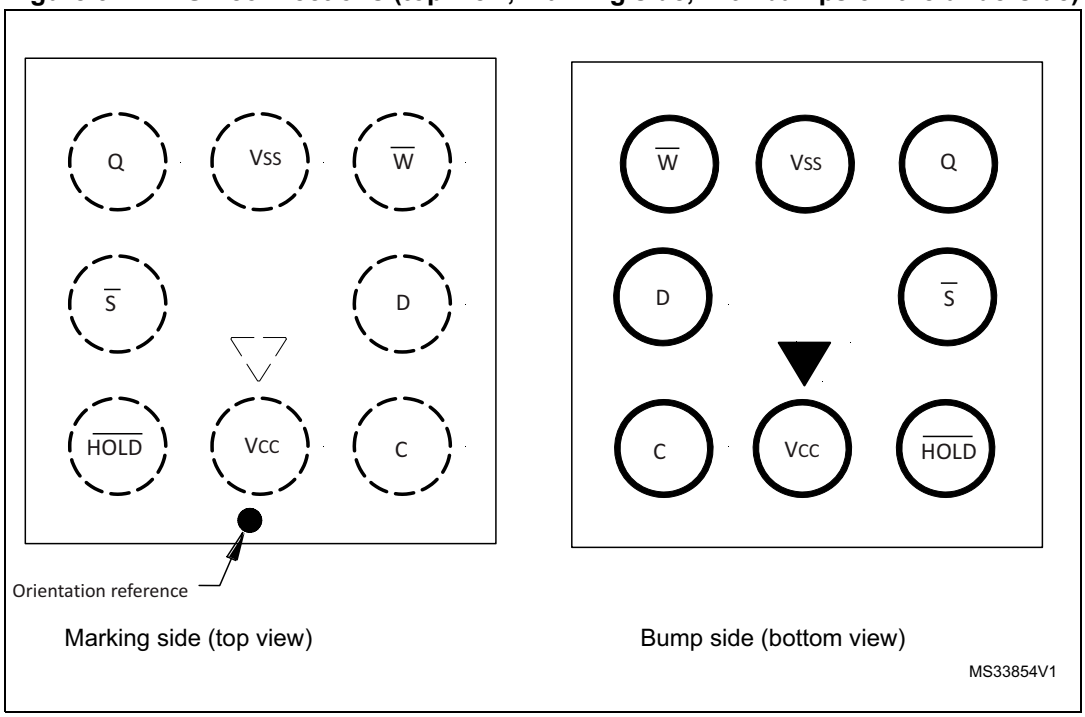

2 Memory organization

The memory is organized as shown in the following figure.

Figure 4. Block diagram

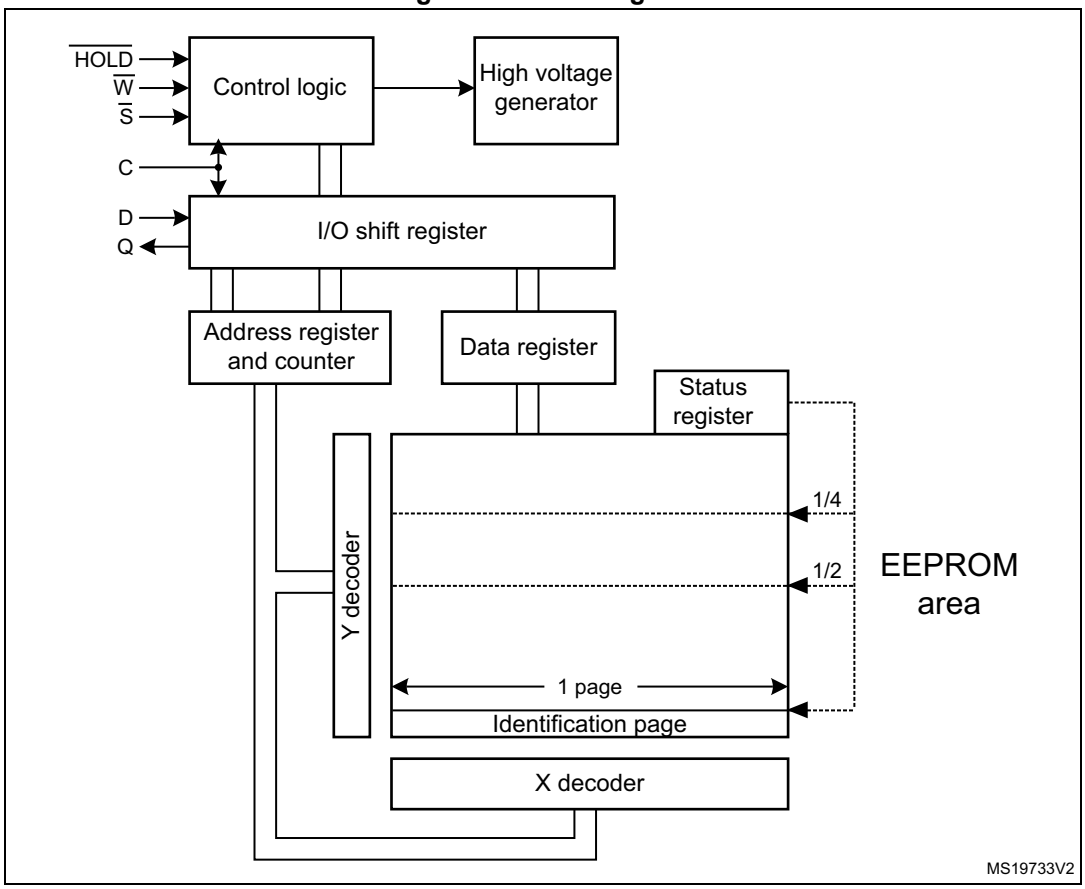

3 Signal description

During all operations, V_{CC} must be held stable and within the specified valid range: V_{CC}(min) to V_{CC}(max).

All of the input and output signals must be held high or low (according to voltages of V_{IH}, V_{OH}, V_{IL} or V_{OL}, as specified in *Section 9: DC and AC parameters*). These signals are described next.

3.1 Serial Data Output (Q)

This output signal is used to transfer data serially out of the device. Data is shifted out on the falling edge of Serial Clock (C).

3.2 Serial Data Input (D)

This input signal is used to transfer data serially into the device. It receives instructions, addresses, and the data to be written. Values are latched on the rising edge of Serial Clock (C).

3.3 Serial Clock (C)

This input signal provides the timing of the serial interface. Instructions, addresses, or data present at Serial Data Input (D) are latched on the rising edge of Serial Clock (C). Data on Serial Data Output (Q) change from the falling edge of Serial Clock (C).

3.4 Chip Select ($\overline{S}$)

When this input signal is high, the device is deselected and Serial Data Output (Q) is at high impedance. The device is in the Standby Power mode, unless an internal Write cycle is in progress. Driving Chip Select ($\overline{S}$) low selects the device, placing it in the Active Power mode.

After power-up, a falling edge on Chip Select ($\overline{S}$) is required prior to the start of any instruction.

3.5 Hold ($\overline{HOLD}$)

The Hold ($\overline{HOLD}$) signal is used to pause any serial communications with the device without deselecting the device.

During the Hold condition, the Serial Data Output (Q) is high impedance, and Serial Data Input (D) and Serial Clock (C) are Don't Care.

To start the Hold condition, the device must be selected, with Chip Select ($\overline{S}$) driven low.

3.6 Write Protect ($\overline{W}$)

The main purpose of this input signal is to freeze the size of the area of memory that is protected against Write instructions (as specified by the values in the BP1 and BP0 bits of the Status Register).

This pin must be driven either high or low, and must be stable during all Write instructions.

3.7 V_{CC} supply voltage

V_{CC} is the supply voltage.

3.8 V_{SS} ground

V_{SS} is the reference for all signals, including the V_{CC} supply voltage.

4 Connecting to the SPI bus

All instructions, addresses and input data bytes are shifted in to the device, most significant bit first. The Serial Data Input (D) is sampled on the first rising edge of the Serial Clock (C) after Chip Select ($\overline{S}$) goes low.

All output data bytes are shifted out of the device, most significant bit first. The Serial Data Output (Q) is latched on the first falling edge of the Serial Clock (C) after the instruction (such as the Read from Memory Array and Read Status Register instructions) have been clocked into the device.

Figure 5. Bus master and memory devices on the SPI bus

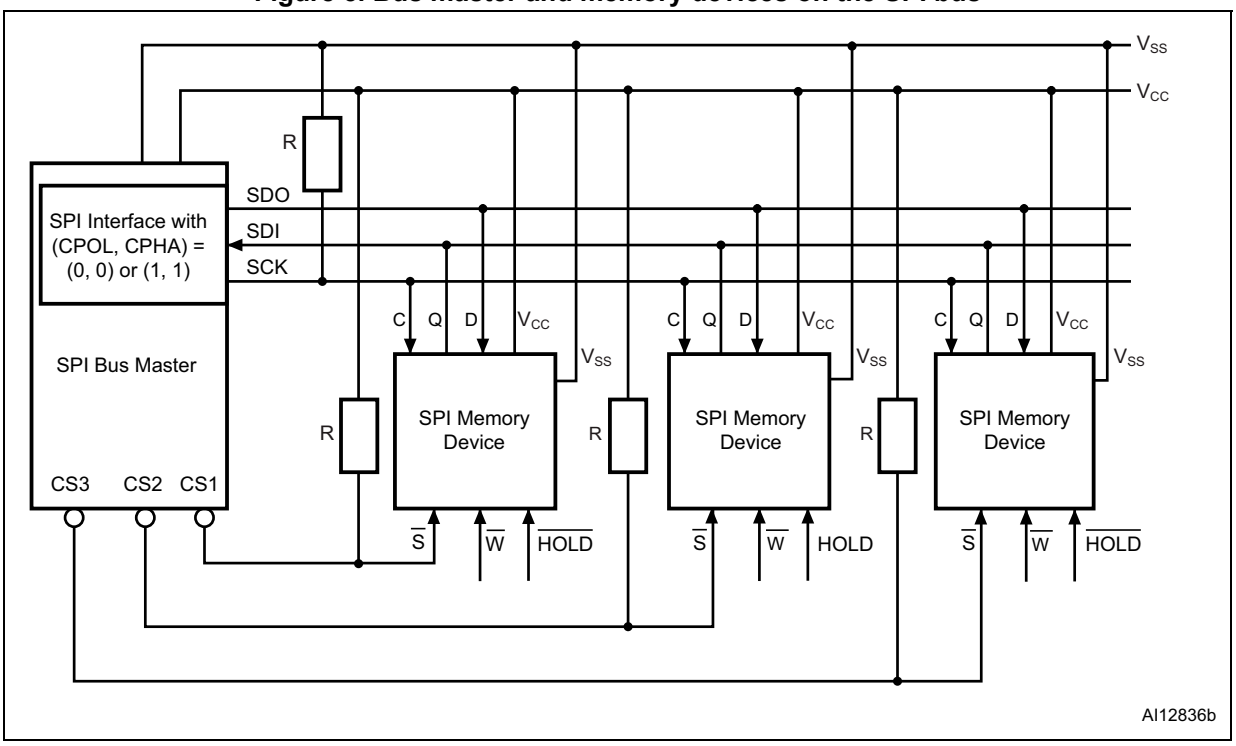

1. The Write Protect ($\overline{W}$) and Hold ($\overline{HOLD}$) signals should be driven, high or low as appropriate.

Figure 5 shows an example of three memory devices connected to an SPI bus master. Only one memory device is selected at a time, so only one memory device drives the Serial Data Output (Q) line at a time. The other memory devices are high impedance.

The pull-up resistor R (represented in *Figure 5*) ensures that a device is not selected if the Bus Master leaves the $\overline{S}$ line in the high impedance state.

In applications where the Bus Master may leave all SPI bus lines in high impedance at the same time (for example, if the Bus Master is reset during the transmission of an instruction), the clock line (C) must be connected to an external pull-down resistor so that, if all inputs/outputs become high impedance, the C line is pulled low (while the $\overline{S}$ line is pulled high): this ensures that $\overline{S}$ and C do not become high at the same time, and so, that the t_{SHCH} requirement is met. The typical value of R is 100 kΩ

4.1 SPI modes

These devices can be driven by a microcontroller with its SPI peripheral running in either of the following two modes:

- CPOL=0, CPHA=0
- CPOL=1, CPHA=1

For these two modes, input data is latched in on the rising edge of Serial Clock (C), and output data is available from the falling edge of Serial Clock (C).

The difference between the two modes, as shown in *Figure 6*, is the clock polarity when the bus master is in Stand-by mode and not transferring data:

- C remains at 0 for (CPOL=0, CPHA=0)
- C remains at 1 for (CPOL=1, CPHA=1)

Figure 6. SPI modes supported

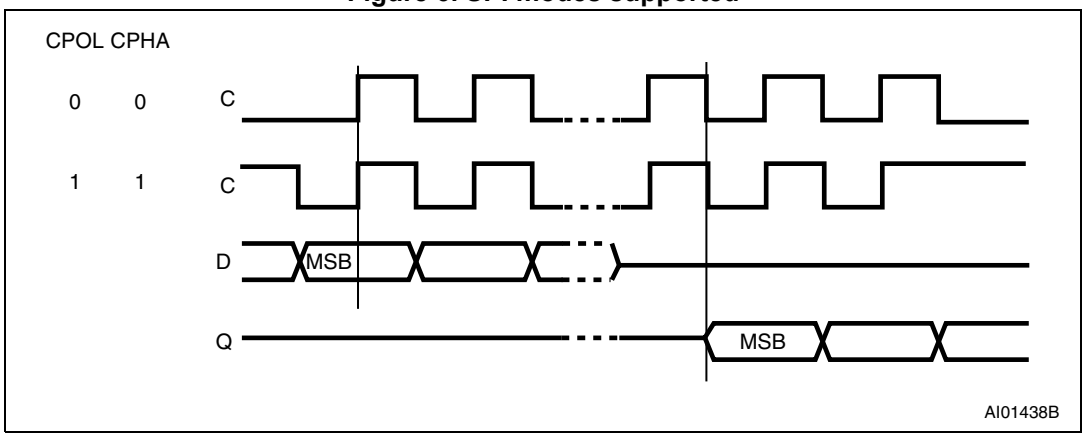

5 Operating features

5.1 Supply voltage (V_{CC})

5.1.1 Operating supply voltage (V_{CC})

Prior to selecting the memory and issuing instructions to it, a valid and stable V_{CC} voltage within the specified [V_{CC}(min), V_{CC}(max)] range must be applied (see Operating conditions in *Section 9: DC and AC parameters*). This voltage must remain stable and valid until the end of the transmission of the instruction and, for a Write instruction, until the completion of the internal write cycle (t_W). In order to secure a stable DC supply voltage, it is recommended to decouple the V_{CC} line with a suitable capacitor (usually of the order of 10 nF to 100 nF) close to the V_{CC}/V_{SS} device pins.

5.1.2 Device reset

In order to prevent erroneous instruction decoding and inadvertent Write operations during power-up, a power-on-reset (POR) circuit is included. At power-up, the device does not respond to any instruction until VCC reaches the POR threshold voltage. This threshold is lower than the minimum V_{CC} operating voltage (see Operating conditions in *Section 9*).

At power-up, when V_{CC} passes over the POR threshold, the device is reset and is in the following state:

- in Standby Power mode,
- deselected,
- Status Register values:
  - The Write Enable Latch (WEL) bit is reset to 0.
  - The Write In Progress (WIP) bit is reset to 0.
  - The SRWD, BP1 and BP0 bits remain unchanged (non-volatile bits).

It is important to note that the device must not be accessed until V_{CC} reaches a valid and stable level within the specified [V_{CC}(min), V_{CC}(max)] range, as defined under Operating conditions in *Section 9*.

5.1.3 Power-up conditions

When the power supply is turned on, V_{CC} rises continuously from V_{SS} to V_{CC}. During this time, the Chip Select ($\overline{S}$) line is not allowed to float but should follow the V_{CC} voltage. It is therefore recommended to connect the $\overline{S}$ line to V_{CC} via a suitable pull-up resistor (see *Figure 5*).

In addition, the Chip Select ($\overline{S}$) input offers a built-in safety feature, as the $\overline{S}$ input is edge-sensitive as well as level-sensitive: after power-up, the device does not become selected until a falling edge has first been detected on Chip Select ($\overline{S}$). This ensures that Chip Select ($\overline{S}$) must have been high, prior to going low to start the first operation.

The V_{CC} voltage has to rise continuously from 0 V up to the minimum V_{CC} operating voltage defined under Operating conditions in *Section 9*.

5.1.4 Power-down

During power-down (continuous decrease of the V_{CC} supply voltage below the minimum V_{CC} operating voltage defined under Operating conditions in *Section 9*), the device must be:

- deselected (Chip Select $\overline{S}$ should be allowed to follow the voltage applied on V_{CC}),
- in Standby Power mode (there should not be any internal write cycle in progress).

5.2 Active Power and Standby Power modes

When Chip Select ($\overline{S}$) is low, the device is selected, and in the Active Power mode. The device consumes I_{CC}.

When Chip Select ($\overline{S}$) is high, the device is deselected. If a Write cycle is not currently in progress, the device then goes into the Standby Power mode, and the device consumption drops to I_{CC1}, as specified in DC characteristics (see *Section 9*).

5.3 Hold condition

The Hold ($\overline{HOLD}$) signal is used to pause any serial communications with the device without resetting the clocking sequence.

To enter the Hold condition, the device must be selected, with Chip Select ($\overline{S}$) low.

During the Hold condition, the Serial Data Output (Q) is high impedance, and the Serial Data Input (D) and the Serial Clock (C) are Don't Care.

Normally, the device is kept selected for the whole duration of the Hold condition. Deselecting the device while it is in the Hold condition has the effect of resetting the state of the device, and this mechanism can be used if required to reset any processes that had been in progress.(a) (b)

Figure 7. Hold condition activation

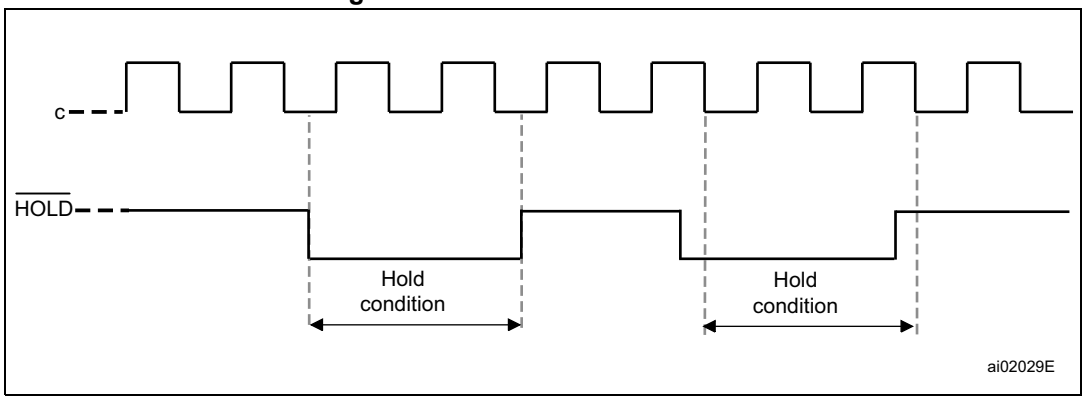

a. This resets the internal logic, except the WEL and WIP bits of the Status Register.

b. In the specific case where the device has shifted in a Write command (Inst + Address + data bytes, each data byte being exactly 8 bits), deselecting the device also triggers the Write cycle of this decoded command.

The Hold condition starts when the Hold (HOLD) signal is driven low when Serial Clock (C) is already low (as shown in *Figure 7*).

Figure 7 also shows what happens if the rising and falling edges are not timed to coincide with Serial Clock (C) being low.

5.4 Status Register

The Status Register contains a number of status and control bits that can be read or set (as appropriate) by specific instructions. See *Section 6.3: Read Status Register (RDSR)* for a detailed description of the Status Register bits.

5.5 Data protection and protocol control

The device features the following data protection mechanisms:

- Before accepting the execution of the Write and Write Status Register instructions, the device checks whether the number of clock pulses comprised in the instructions is a multiple of eight.
- All instructions that modify data must be preceded by a Write Enable (WREN) instruction to set the Write Enable Latch (WEL) bit.
- The Block Protect (BP1, BP0) bits in the Status Register are used to configure part of the memory as read-only.
- The Write Protect ($\overline{W}$) signal is used to protect the Block Protect (BP1, BP0) bits in the Status Register.

For any instruction to be accepted, and executed, Chip Select ($\overline{S}$) must be driven high after the rising edge of Serial Clock (C) for the last bit of the instruction, and before the next rising edge of Serial Clock (C).

Two points should be noted in the previous sentence:

- The “last bit of the instruction” can be the eighth bit of the instruction code, or the eighth bit of a data byte, depending on the instruction (except for Read Status Register (RDSR) and Read (READ) instructions).
- The “next rising edge of Serial Clock (C)” might (or might not) be the next bus transaction for some other device on the SPI bus.

Table 2. Write-protected block size

Status Register bits		Protected block	Protected array addresses
BP1	BP0		
0	0	none	none
0	1	Upper quarter	0600h - 07FFh
1	0	Upper half	0400h - 07FFh
1	1	Whole memory	0000h - 07FFh

6 Instructions

Each command is composed of bytes (MSBit transmitted first), initiated with the instruction byte, as summarized in *Table 3*.

If an invalid instruction is sent (one not contained in *Table 3*), the device automatically enters a Wait state until deselected.

Table 3. Instruction set

Instruction	Description	Instruction format
WREN	Write Enable	0000 0110
WRDI	Write Disable	0000 0100
RDSR	Read Status Register	0000 0101
WRSR	Write Status Register	0000 0001
READ	Read from Memory Array	0000 0011
WRITE	Write to Memory Array	0000 0010
RDID(1)	Read Identification Page	1000 0011
WRID(1)	Write Identification Page	1000 0010
RDLS(1)	Reads the Identification Page lock status	1000 0011
LID(1)	Locks the Identification page in read-only mode	1000 0010

1. Instruction available only for the M95160-D device.

For read and write commands to memory array and Identification Page the address is defined by two bytes as explained in *Table 4*.

Table 4. Significant bits within the two address bytes(1)(2)

Instructions	MSB Address byte								LSB Address byte							
	b15	b14	b13	b12	b11	b10	b9	b8	b7	b6	b5	b4	b3	b2	b1	b0
READ or WRITE	x	x	x	x	x	A10	A9	A8	A7	A6	A5	A4	A3	A2	A1	A0
RDID or WRID(3)	0	0	0	0	0	0	0	0	0	0	0	A4	A3	A2	A1	A0
RDLS or LID(3)	0	0	0	0	0	1	0	0	0	0	0	0	0	0	0	0

1. A: Significant address bit.
2. x: bit is Don't Care.
3. Instruction available only for the M95160-D device.

6.1 Write Enable (WREN)

The Write Enable Latch (WEL) bit must be set prior to each WRITE and WRSR instruction. The only way to do this is to send a Write Enable instruction to the device.

As shown in *Figure 8*, to send this instruction to the device, Chip Select ($\overline{S}$) is driven low, and the bits of the instruction byte are shifted in, on Serial Data Input (D). The device then enters a wait state. It waits for the device to be deselected, by Chip Select ($\overline{S}$) being driven high.

Figure 8. Write Enable (WREN) sequence

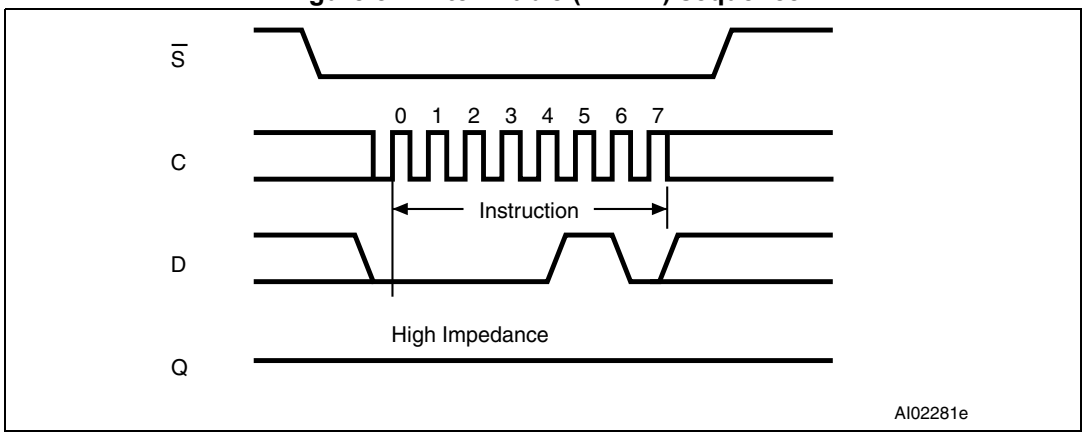

6.2 Write Disable (WRDI)

One way of resetting the Write Enable Latch (WEL) bit is to send a Write Disable instruction to the device.

As shown in *Figure 9*, to send this instruction to the device, Chip Select ($\overline{S}$) is driven low, and the bits of the instruction byte are shifted in, on Serial Data Input (D).

The device then enters a wait state. It waits for a the device to be deselected, by Chip Select ($\overline{S}$) being driven high.

The Write Enable Latch (WEL) bit, in fact, becomes reset by any of the following events:

- Power-up
- WRDI instruction execution
- WRSR instruction completion
- WRITE instruction completion.

Figure 9. Write Disable (WRDI) sequence

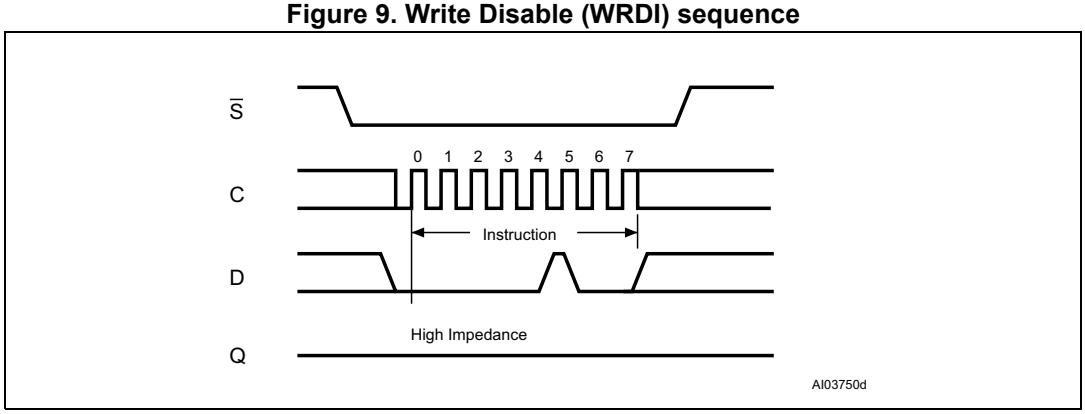

6.3 Read Status Register (RDSR)

The Read Status Register (RDSR) instruction is used to read the Status Register. The Status Register may be read at any time, even while a Write or Write Status Register cycle is in progress. When one of these cycles is in progress, it is recommended to check the Write In Progress (WIP) bit before sending a new instruction to the device. It is also possible to read the Status Register continuously, as shown in *Figure 10*.

Figure 10. Read Status Register (RDSR) sequence

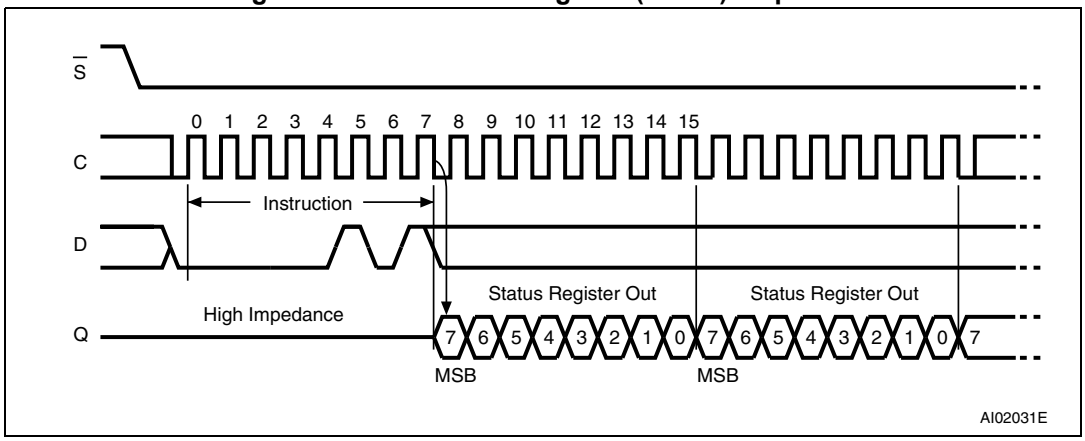

The status and control bits of the Status Register are as follows:

6.3.1 WIP bit

The Write In Progress (WIP) bit indicates whether the memory is busy with a Write or Write Status Register cycle. When set to 1, such a cycle is in progress, when reset to 0, no such cycle is in progress.

6.3.2 WEL bit

The Write Enable Latch (WEL) bit indicates the status of the internal Write Enable Latch. When set to 1, the internal Write Enable Latch is set. When set to 0, the internal Write Enable Latch is reset, and no Write or Write Status Register instruction is accepted.

The WEL bit is returned to its reset state by the following events:

- Power-up
- Write Disable (WRDI) instruction completion
- Write Status Register (WRSR) instruction completion
- Write (WRITE) instruction completion

6.3.3 BP1, BP0 bits

The Block Protect (BP1, BP0) bits are non volatile. They define the size of the area to be software-protected against Write instructions. These bits are written with the Write Status Register (WRSR) instruction. When one or both of the Block Protect (BP1, BP0) bits is set to 1, the relevant memory area (as defined in *Table 2*) becomes protected against Write (WRITE) instructions. The Block Protect (BP1, BP0) bits can be written provided that the Hardware Protected mode has not been set.

6.3.4 SRWD bit

The Status Register Write Disable (SRWD) bit is operated in conjunction with the Write Protect ($\overline{W}$) signal. The Status Register Write Disable (SRWD) bit and Write Protect ($\overline{W}$) signal enable the device to be put in the Hardware Protected mode (when the Status Register Write Disable (SRWD) bit is set to 1, and Write Protect ($\overline{W}$) is driven low). In this mode, the non-volatile bits of the Status Register (SRWD, BP1, BP0) become read-only bits and the Write Status Register (WRSR) instruction is no longer accepted for execution.

Table 5. Status Register format

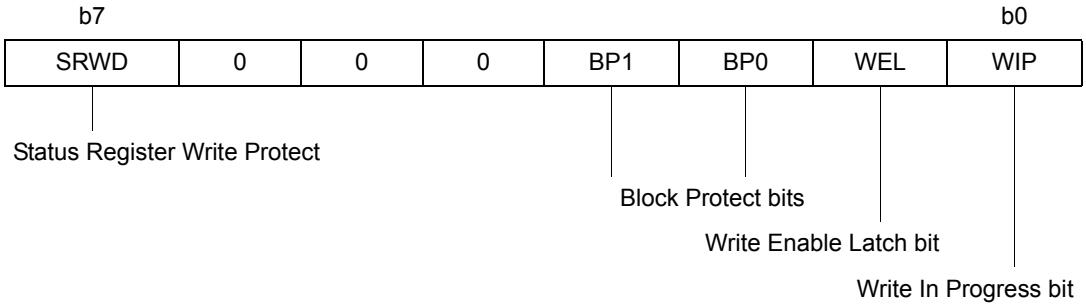

6.4 Write Status Register (WRSR)

The Write Status Register (WRSR) instruction is used to write new values to the Status Register. Before it can be accepted, a Write Enable (WREN) instruction must have been previously executed.

The Write Status Register (WRSR) instruction is entered by driving Chip Select ($\overline{S}$) low, followed by the instruction code, the data byte on Serial Data input (D) and Chip Select ($\overline{S}$) driven high. Chip Select ($\overline{S}$) must be driven high after the rising edge of Serial Clock (C) that latches in the eighth bit of the data byte, and before the next rising edge of Serial Clock (C). Otherwise, the Write Status Register (WRSR) instruction is not executed.

The instruction sequence is shown in *Figure 11*.

Figure 11. Write Status Register (WRSR) sequence

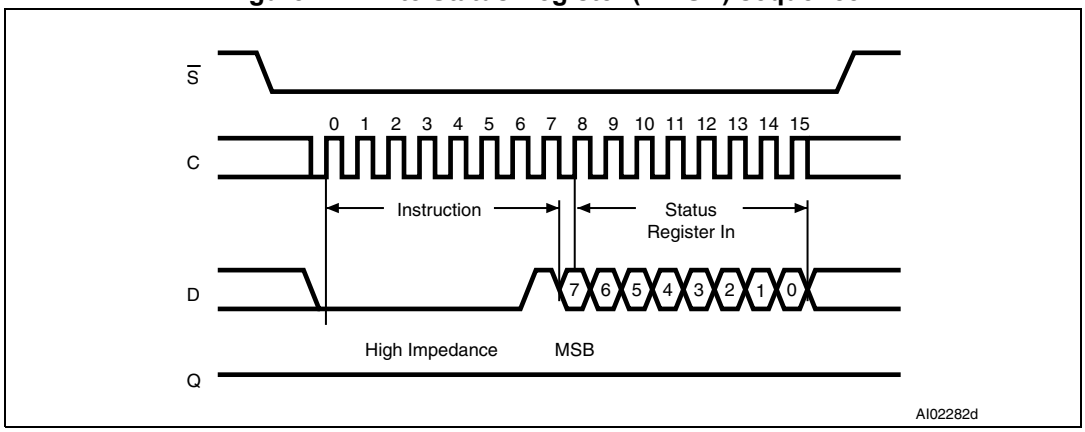

Driving the Chip Select ($\overline{S}$) signal high at a byte boundary of the input data triggers the self-timed Write cycle that takes t_W to complete (as specified in AC tables under *Section 9: DC and AC parameters*).

While the Write Status Register cycle is in progress, the Status Register may still be read to check the value of the Write in progress (WIP) bit: the WIP bit is 1 during the self-timed Write cycle t_W, and 0 when the Write cycle is complete. The WEL bit (Write Enable Latch) is also reset at the end of the Write cycle t_W.

The Write Status Register (WRSR) instruction enables the user to change the values of the BP1, BP0 and SRWD bits:

- The Block Protect (BP1, BP0) bits define the size of the area that is to be treated as read-only, as defined in *Table 2*.
- The SRWD (Status Register Write Disable) bit, in accordance with the signal read on the Write Protect pin ($\overline{W}$), enables the user to set or reset the Write protection mode of the Status Register itself, as defined in *Table 6*. When in Write-protected mode, the Write Status Register (WRSR) instruction is not executed.

The contents of the SRWD and BP1, BP0 bits are updated after the completion of the WRSR instruction, including the t_W Write cycle.

The Write Status Register (WRSR) instruction has no effect on the b6, b5, b4, b1, b0 bits in the Status Register. Bits b6, b5, b4 are always read as 0.

Table 6. Protection modes

$\overline{W}$ signal	SRWD bit	Mode	Write protection of the Status Register	Memory content	
				Protected area(1)	Unprotected area(1)
1	0	Software-protected (SPM)	Status Register is writable (if the WREN instruction has set the WEL bit). The values in the BP1 and BP0 bits can be changed.	Write-protected	Ready to accept Write instructions
0	0				
1	1				
0	1	Hardware-protected (HPM)	Status Register is Hardware write-protected. The values in the BP1 and BP0 bits cannot be changed.	Write-protected	Ready to accept Write instructions

1. As defined by the values in the Block Protect (BP1, BP0) bits of the Status Register. See *Table 2*.

The protection features of the device are summarized in *Table 6*.

When the Status Register Write Disable (SRWD) bit in the Status Register is 0 (its initial delivery state), it is possible to write to the Status Register (provided that the WEL bit has previously been set by a WREN instruction), regardless of the logic level applied on the Write Protect ($\overline{W}$) input pin.

When the Status Register Write Disable (SRWD) bit in the Status Register is set to 1, two cases should be considered, depending on the state of the Write Protect ($\overline{W}$) input pin:

- If Write Protect ($\overline{W}$) is driven high, it is possible to write to the Status Register (provided that the WEL bit has previously been set by a WREN instruction).
- If Write Protect ($\overline{W}$) is driven low, it is not possible to write to the Status Register even if the WEL bit has previously been set by a WREN instruction. (Attempts to write to the Status Register are rejected, and are not accepted for execution). As a consequence, all the data bytes in the memory area, which are Software-protected (SPM) by the Block Protect (BP1, BP0) bits in the Status Register, are also hardware-protected against data modification.

Regardless of the order of the two events, the Hardware-protected mode (HPM) can be entered by:

- either setting the SRWD bit after driving the Write Protect ($\overline{W}$) input pin low,
- or driving the Write Protect ($\overline{W}$) input pin low after setting the SRWD bit.

Once the Hardware-protected mode (HPM) has been entered, the only way of exiting it is to pull high the Write Protect ($\overline{W}$) input pin.

If the Write Protect ($\overline{W}$) input pin is permanently tied high, the Hardware-protected mode (HPM) can never be activated, and only the Software-protected mode (SPM), using the Block Protect (BP1, BP0) bits in the Status Register, can be used.

6.5 Read from Memory Array (READ)

As shown in *Figure 12*, to send this instruction to the device, Chip Select ($\overline{S}$) is first driven low. The bits of the instruction byte and address bytes are then shifted in, on Serial Data Input (D). The address is loaded into an internal address register, and the byte of data at that address is shifted out, on Serial Data Output (Q).

Figure 12. Read from Memory Array (READ) sequence

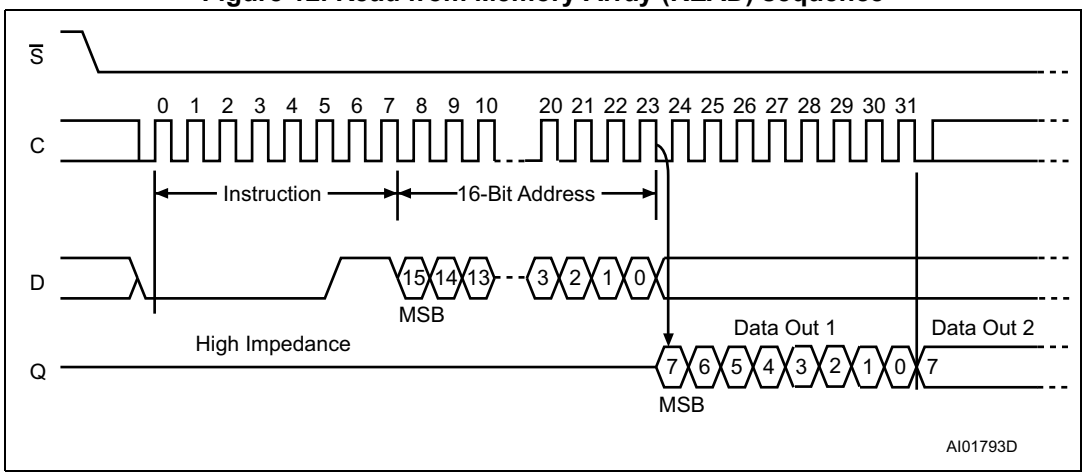

1. Depending on the memory size, as shown in *Table 4*, the most significant address bits are Don't Care.

If Chip Select ($\overline{S}$) continues to be driven low, the internal address register is incremented automatically, and the byte of data at the new address is shifted out.

When the highest address is reached, the address counter rolls over to zero, allowing the Read cycle to be continued indefinitely. The whole memory can, therefore, be read with a single READ instruction.

The Read cycle is terminated by driving Chip Select ($\overline{S}$) high. The rising edge of the Chip Select ($\overline{S}$) signal can occur at any time during the cycle.

The instruction is not accepted, and is not executed, if a Write cycle is currently in progress.

6.6 Write to Memory Array (WRITE)

As shown in *Figure 13*, to send this instruction to the device, Chip Select ($\overline{S}$) is first driven low. The bits of the instruction byte, address byte, and at least one data byte are then shifted in, on Serial Data Input (D).

The instruction is terminated by driving Chip Select ($\overline{S}$) high at a byte boundary of the input data. The self-timed Write cycle, triggered by the Chip Select ($\overline{S}$) rising edge, continues for a period t_W (as specified in AC characteristics in *Section 9: DC and AC parameters*), at the end of which the Write in Progress (WIP) bit is reset to 0.

Figure 13. Byte Write (WRITE) sequence

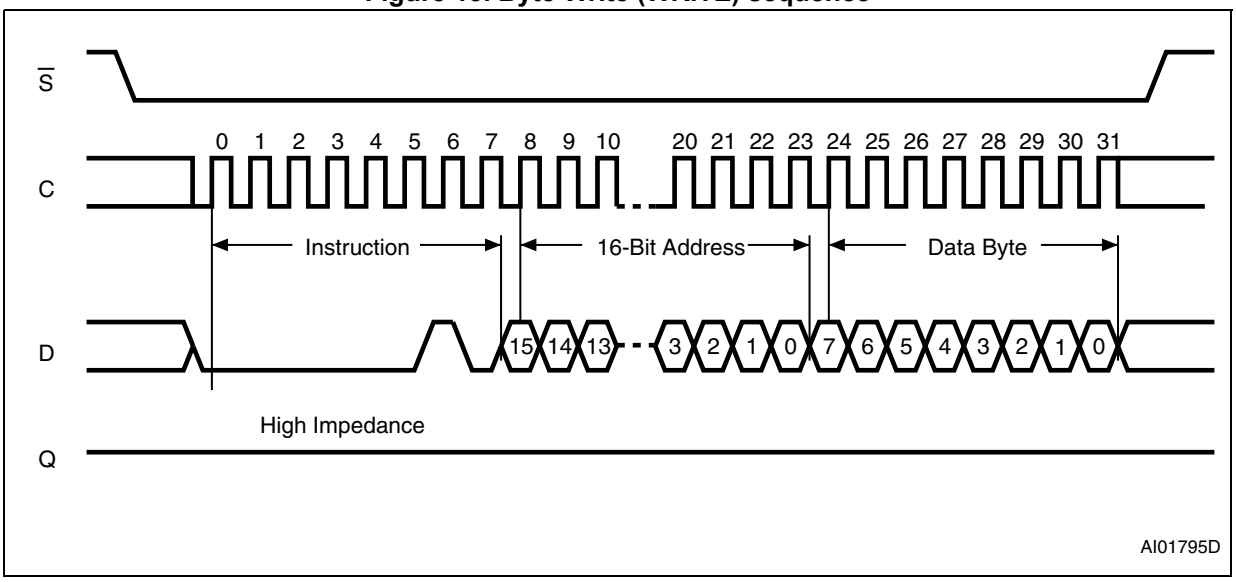

1. Depending on the memory size, as shown in *Table 4*, the most significant address bits are Don't Care.

In the case of *Figure 13*, Chip Select ($\overline{S}$) is driven high after the eighth bit of the data byte has been latched in, indicating that the instruction is being used to write a single byte. However, if Chip Select ($\overline{S}$) continues to be driven low, as shown in *Figure 14*, the next byte of input data is shifted in, so that more than a single byte, starting from the given address towards the end of the same page, can be written in a single internal Write cycle.

Each time a new data byte is shifted in, the least significant bits of the internal address counter are incremented. If more bytes are sent than will fit up to the end of the page, a condition known as "roll-over" occurs. In case of roll-over, the bytes exceeding the page size are overwritten from location 0 of the same page.

The instruction is not accepted, and is not executed, under the following conditions:

- if the Write Enable Latch (WEL) bit has not been set to 1 (by executing a Write Enable instruction just before),
- if a Write cycle is already in progress,
- if the device has not been deselected, by driving high Chip Select ($\overline{S}$), at a byte boundary (after the eighth bit, b0, of the last data byte that has been latched in),
- if the addressed page is in the region protected by the Block Protect (BP1 and BP0) bits.

Note: The self-timed write cycle t_W is internally executed as a sequence of two consecutive events: [Erase addressed byte(s)], followed by [Program addressed byte(s)]. An erased bit is read as "0" and a programmed bit is read as "1".

Figure 14. Page Write (WRITE) sequence

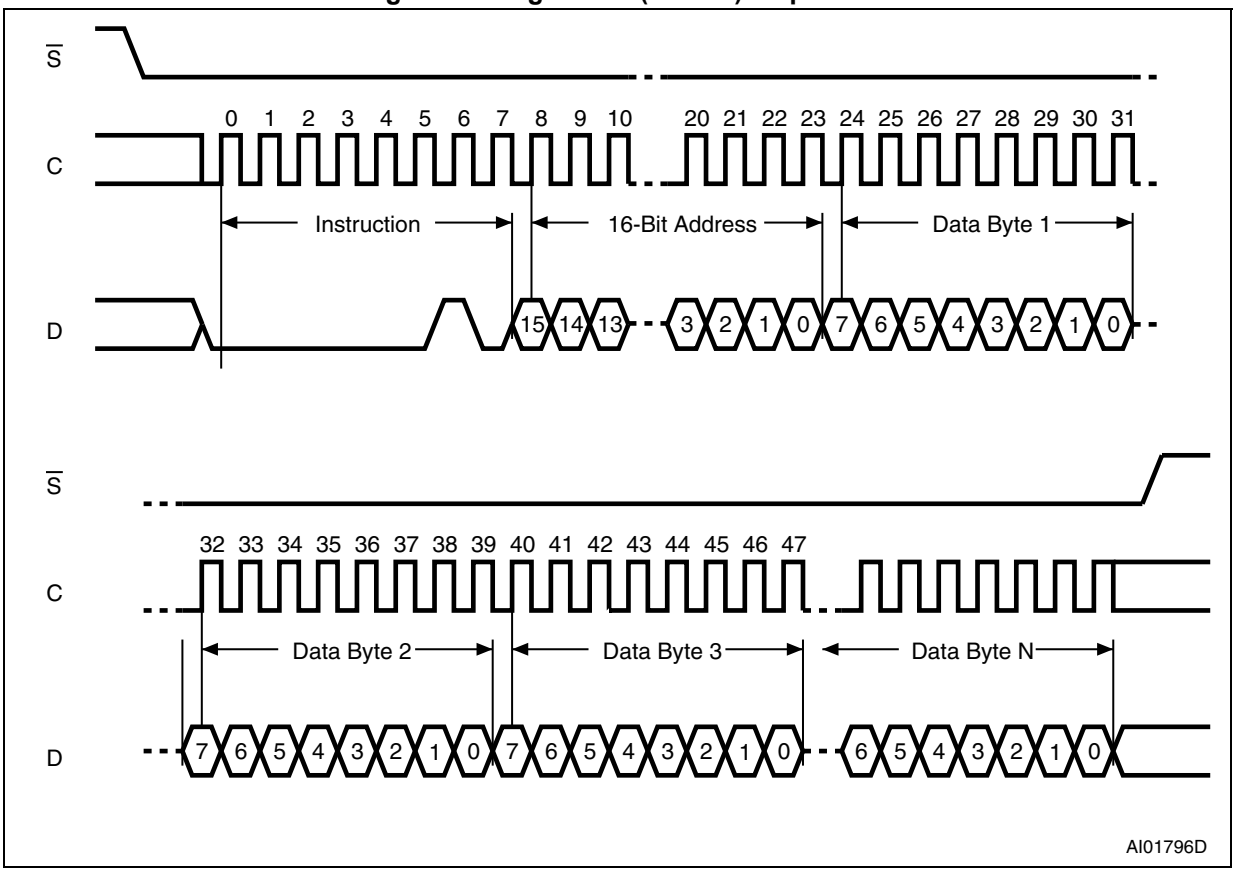

1. Depending on the memory size, as shown in *Table 4*, the most significant address bits are Don't Care.

6.7 Read Identification Page (available only in M95160-D devices)

The Read Identification Page (RDID) instruction is used to read the Identification Page (additional page of 32 bytes which can be written and later permanently locked in Read-only mode).

The Chip Select ($\overline{S}$) signal is first driven low, the bits of the instruction byte and address bytes are then shifted in (MSB first) on Serial Data input (D). Address bit A10 must be 0, other upper address bits are Don't Care (it might be easier to define these bits as 0, as shown in *Table 4*). The data byte pointed to by the lower address bits [A4:A0] is shifted out (MSB first) on Serial Data output (Q).

The first byte addressed can be any byte within the identification page.

If Chip Select ($\overline{S}$) continues to be driven low, the internal address register is automatically incremented and the byte of data at the new address is shifted out.

Note that there is no roll over feature in the Identification Page. The address of bytes to read must not exceed the page boundary.

The read cycle is terminated by driving Chip Select ($\overline{S}$) high. The rising edge of the Chip Select ($\overline{S}$) signal can occur at any time when the data bits are shifted out.

The instruction is not accepted, and is not executed, if a Write cycle is currently in progress.

Figure 15. Read Identification Page sequence

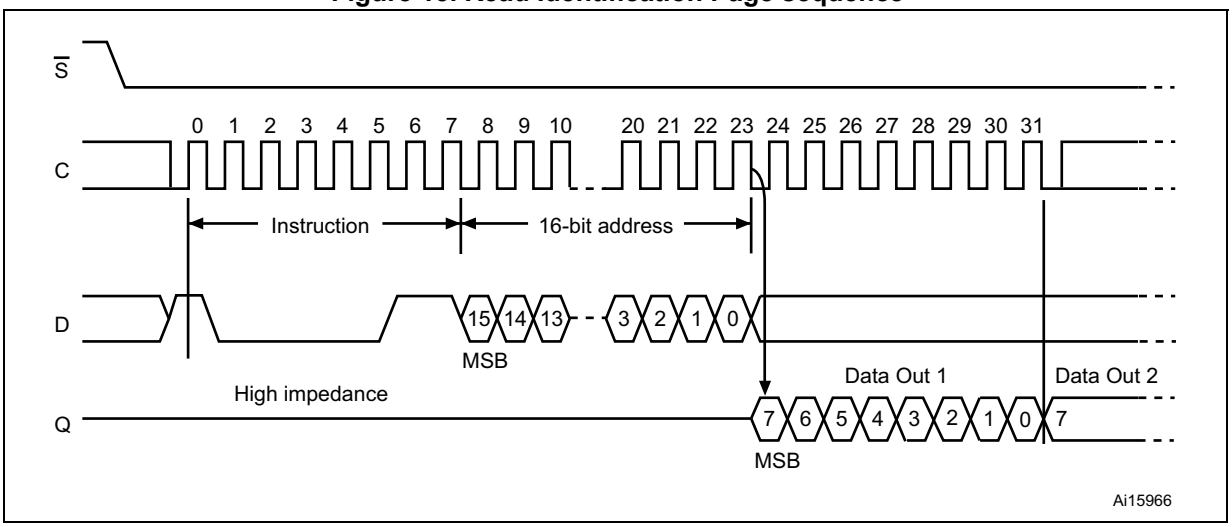

6.8 Write Identification Page (available only in M95160-D devices)

The Write Identification Page (WRID) instruction is used to write the Identification Page (additional page of 32 bytes which can also be permanently locked in Read-only mode).

The Chip Select signal ($\overline{S}$) is first driven low, and then the bits of the instruction byte, address bytes, and at least one data byte are shifted in (MSB first) on Serial Data input (D). Address bit A10 must be 0, other upper address bits are Don't Care (it might be easier to define these bits as 0, as shown in *Table 4*). The lower address bits [A4:A0] define the byte address inside the identification page.

The self-timed Write cycle starts from the rising edge of Chip Select ($\overline{S}$), and continues for a period t_W (as specified in *Section 9: DC and AC parameters*).

Figure 16. Write identification page sequence

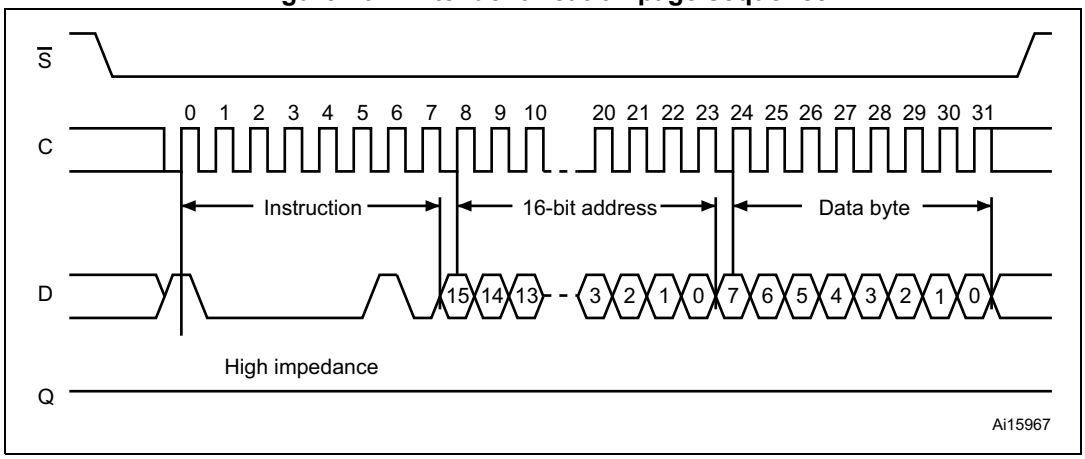

The instruction is discarded, and is not executed, under the following conditions:

- If the Write Enable Latch (WEL) bit has not been set to 1 (by executing a Write Enable instruction just before).
- If a Write cycle is already in progress.
- If the device has not been deselected, by driving high Chip Select (S), at exactly a byte boundary (after the eighth bit, b0, of the last data byte that has been latched in).

6.9 Read Lock Status (available only in M95160-D devices)

The Read Lock Status (RDLS) instruction is used to read the lock status.

To send this instruction to the device, Chip Select ($\overline{S}$) first has to be driven low. The bits of the instruction byte and address bytes are then shifted in (MSB first) on Serial Data input (D). Address bit A10 must be 1; all other address bits are Don't Care (it might be easier to define these bits as 0, as shown in *Table 4*). The Lock bit is the LSB (Least Significant Bit) of the byte read on Serial Data output (Q). It is at '1' when the lock is active and at '0' when the lock is not active. If Chip Select ($\overline{S}$) continues to be driven low, the same data byte is shifted out.

The read cycle is terminated by driving Chip Select ($\overline{S}$) high. The instruction sequence is shown in *Figure 17*.

The Read Lock Status instruction is not accepted and not executed if a Write cycle is currently in progress.

Figure 17. Read Lock Status sequence

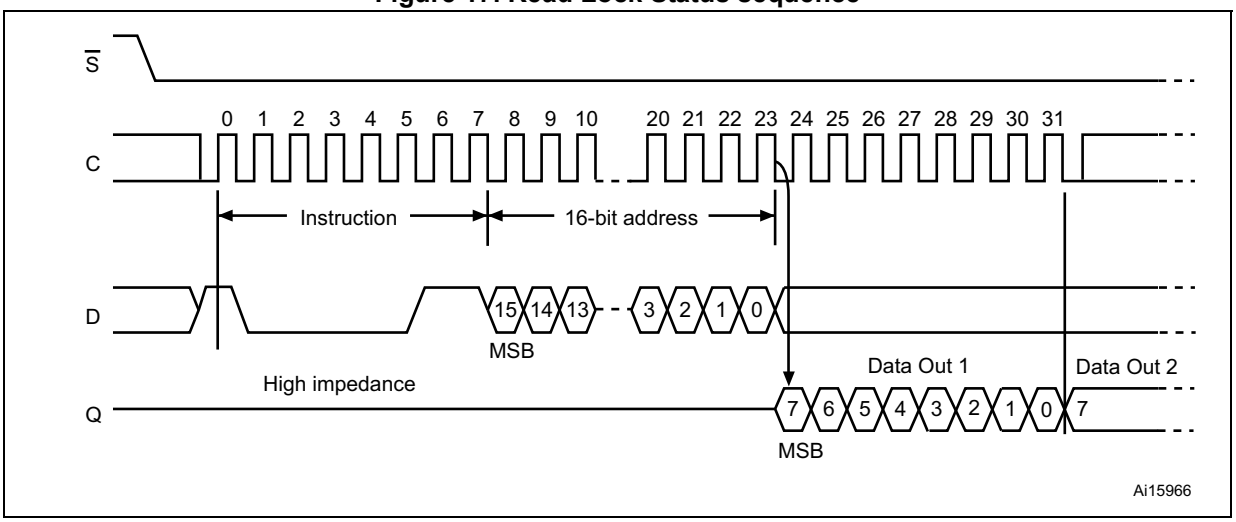

6.10 Lock ID (available only in M95160-D devices)

The Lock Identification Page (LID) command is used to permanently lock the Identification Page in Read-only mode.

The LID instruction is issued by driving Chip Select (S) low, sending (MSB first) the instruction code, the address and a data byte on Serial Data input (D), and driving Chip Select (S) high. In the address sent, A10 must be equal to 1. All other address bits are Don't Care (it might be easier to define these bits as 0, as shown in *Table 4*). The data byte sent must be equal to the binary value xxxx xx1x, where x = Don't Care. The LID instruction is terminated by driving Chip Select (S) high at a data byte boundary, otherwise, the instruction is not executed.

Driving Chip Select ($\overline{S}$) high at a byte boundary of the input data triggers the self-timed Write cycle which duration is t_W (specified in *Section 9: DC and AC parameters*). The instruction sequence is shown in *Figure 18*.

The instruction is discarded, and is not executed, under the following conditions:

- If the Write Enable Latch (WEL) bit has not been set to 1 (by executing a Write Enable instruction just before).
- If a Write cycle is already in progress.
- If the device has not been deselected, by driving high Chip Select (S), at exactly a byte boundary (after the eighth bit, b0, of the last data byte that has been latched in).

Figure 18. Lock ID sequence

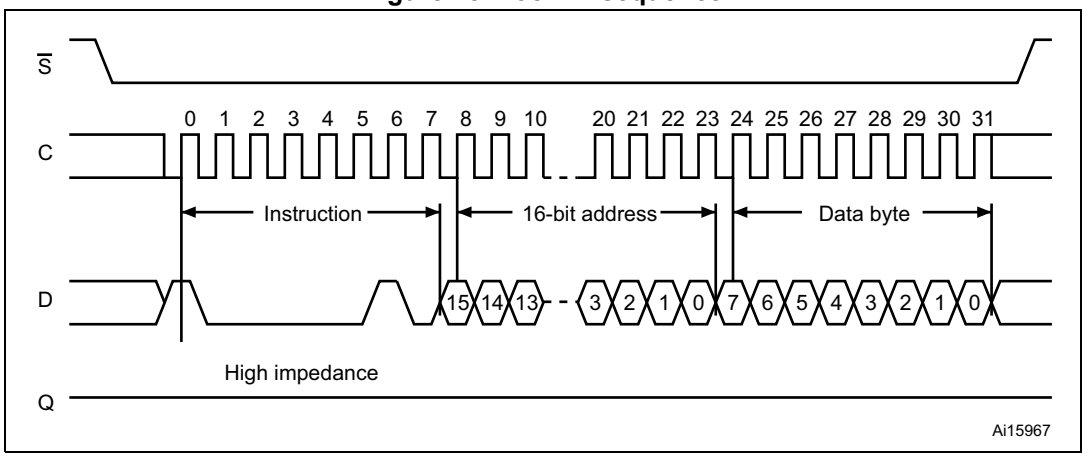

7 Power-up and delivery state

7.1 Power-up state

After power-up, the device is in the following state:

- Standby power mode,
- deselected (after power-up, a falling edge is required on Chip Select ($\overline{S}$) before any instructions can be started),
- not in the Hold condition,
- the Write Enable Latch (WEL) is reset to 0,
- Write In Progress (WIP) is reset to 0.

The SRWD, BP1 and BP0 bits of the Status Register are unchanged from the previous power-down (they are non-volatile bits).

7.2 Initial delivery state

The device is delivered with:

- the memory array set to all 1s (each byte = FFh)
- Status register: bit SRWD =0, BP1 =0 and BP0 =0
- Identification page: byte values are Don't Care.

8 Maximum ratings

Stressing the device outside the ratings listed in *Table 7* may cause permanent damage to the device. These are stress ratings only, and operation of the device at these, or any other conditions outside those indicated in the operating sections of this specification, is not implied. Exposure to absolute maximum rating conditions for extended periods may affect device reliability.

Table 7. Absolute maximum ratings

Symbol	Parameter	Min.	Max.	Unit
	Ambient operating temperature	–40	130	°C
T_{STG}	Storage temperature	–65	150	°C
T_{LEAD}	Lead temperature during soldering	See note (1)		°C
V_O	Output voltage	–0.50	V_{CC}+0.6	V
V_I	Input voltage	–0.50	6.5	V
V_{CC}	Supply voltage	–0.50	6.5	V
I_{OL}	DC output current (Q = 0)	-	5	mA
I_{OH}	DC output current (Q = 1)	-	5	mA
V_{ESD}	Electrostatic discharge voltage (human body model)(2)	-	4000	V

1. Compliant with JEDEC standard J-STD-020D (for small-body, Sn-Pb or Pb free assembly), the ST ECOPACK® 7191395 specification, and the European directive on Restrictions on Hazardous Substances (RoHS directive 2011/65/EU of July 2011).
2. Positive and negative pulses applied on different combinations of pin connections, according to AEC-Q100-002 (compliant with ANSI/ESDA/JEDEC JS-001-2012, C1=100 pF, R1=1500 Ω, R2=500 Ω).

9 DC and AC parameters

This section summarizes the operating conditions and the DC/AC characteristics of the device.

Table 8. Operating conditions (M95160-W, device grade 6)

Symbol	Parameter	Min.	Max.	Unit
V_{CC}	Supply voltage	2.5	5.5	V
T_A	Ambient operating temperature	–40	85	°C

Table 9. Operating conditions (M95160-R, device grade 6)

Symbol	Parameter	Min.	Max.	Unit
V_{CC}	Supply voltage	1.8	5.5	V
T_A	Ambient operating temperature	–40	85	°C

Table 10. Operating conditions (M95160-DF, device grade 6)

Symbol	Parameter	Min.	Max.	Unit
V_{CC}	Supply voltage	1.7	5.5	V
T_A	Ambient operating temperature	–40	85	°C

Table 11. AC measurement conditions

Symbol	Parameter	Min.	Max.	Unit
C_L	Load capacitance	30		pF
-	Input rise and fall times	-	50	ns
-	Input pulse voltages	0.2 V_{CC} to 0.8 V_{CC}		V
-	Input and output timing reference voltages	0.3 V_{CC} to 0.7 V_{CC}		V

Figure 19. AC measurement I/O waveform

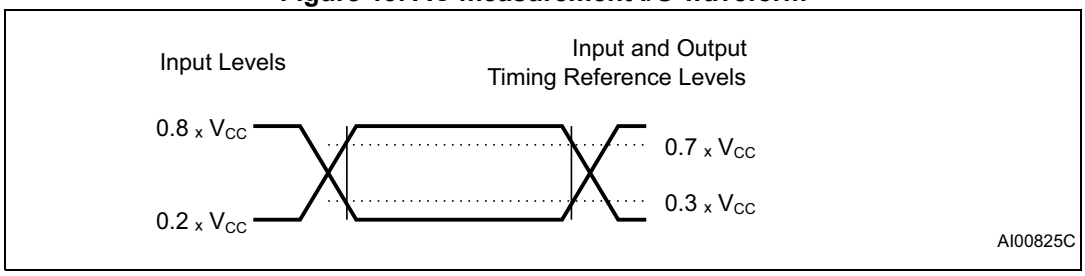

Table 12. Cycling performance

Symbol	Parameter[1]	Test conditions	Min.	Max.	Unit
Ncycle	Write cycle endurance	$T_A \leq$ 25 °C, $V_{CC}(min) < V_{CC} < V_{CC}(max)$	-	4,000,000	Write cycle
		T_A = 85 °C, $V_{CC}(min) < V_{CC} < V_{CC}(max)$	-	1,200,000	

1. Cycling performance for products identified by process letter K (previous products were specified with 1 million cycles at 25 °C)

Table 13. Memory cell data retention

Parameter	Test conditions	Min.	Unit
Data retention[1][2]	T_A = 55 °C	200	Year

1. The data retention behavior is checked in production, while the 200-year limit is defined from characterization and qualification results.
2. For products identified by process letter K (previous products were specified with a data retention of 40 years at 55°C).

Table 14. Capacitance

Symbol	Parameter	Test conditions[1]	Min.	Max.	Unit
C_{OUT}	Output capacitance (Q)	V_{OUT} = 0 V	-	8	pF
C_{IN}	Input capacitance (D)	V_{IN} = 0 V	-	8	pF
	Input capacitance (other pins)	V_{IN} = 0 V	-	6	pF

1. Sampled only, not 100% tested, at T_A = 25 °C and a frequency of 5 MHz.

Table 15. DC characteristics (M95160-W, device grade 6)

Symbol	Parameter	Test conditions in addition to those defined in *Table 8* and *Table 11*	Min.	Max.	Unit
I_{LI}	Input leakage current	$V_{IN} = V_{SS}$ or V_{CC}	-	± 2	µA
I_{LO}	Output leakage current	$\overline{S} = V_{CC}$, $V_{OUT} = V_{SS}$ or V_{CC}	-	± 2	µA
I_{CC}	Supply current (Read)	V_{CC} = 2.5 V, f_C = 5 MHz, C = 0.1 V_{CC}/0.9 V_{CC}, Q = open	-	2	mA
		V_{CC} = 2.5 V, f_C = 10 MHz, C = 0.1 V_{CC}/0.9 V_{CC}, Q = open	-	2 (1)	
		V_{CC} = 5.5 V, f_C = 20 MHz, C = 0.1 V_{CC}/0.9 V_{CC}, Q = open	-	5 (2)	
I_{CC0}(3)	Supply current (Write)	During t_W, $\overline{S} = V_{CC}$, 2.5 V < V_{CC} < 5.5 V	-	5	mA
I_{CC1}	Supply current (Standby)	$\overline{S} = V_{CC}$, V_{CC} = 5.5 V, $V_{IN} = V_{SS}$ or V_{CC},	-	3	µA
		$\overline{S} = V_{CC}$, V_{CC} = 2.5 V, $V_{IN} = V_{SS}$ or V_{CC},	-	2	
V_{IL}	Input low voltage	-	–0.45	0.3 V_{CC}	V
V_{IH}	Input high voltage	-	0.7 V_{CC}	V_{CC}+1	V
V_{OL}	Output low voltage	I_{OL} = 1.5 mA, V_{CC} = 2.5 V	-	0.4	V
V_{OH}	Output high voltage	V_{CC} = 2.5 V and I_{OH} = 0.4 mA or V_{CC} = 5.5 V and I_{OH} = 2 mA	0.8 V_{CC}	-	V
V_{RES}(3)	Internal reset threshold voltage	-	1.0(4)	1.65(5)	V

1. 5 mA for the devices identified with process letter G or S.
2. Only for the devices identified by process letter K.
3. Characterized only, not tested in production.
4. 0.5 V with the device identified by process letter K.
5. 1.5 V with the device identified by process letter K.

Table 16. DC characteristics (M95160-R or M95160-DF, device grade 6)

Symbol	Parameter	Test conditions in addition to those defined in *Table 9* or *Table 10* and *Table 11*(1)	Min.	Max.	Unit
I_{LI}	Input leakage current	$V_{IN} = V_{SS}$ or V_{CC}	-	± 2	µA
I_{LO}	Output leakage current	S = V_{CC}, voltage applied on Q = V_{SS} or V_{CC}	-	± 2	µA
I_{CC}	Supply current (Read)	V_{CC} = 1.8 V or 1.7 V, f_C = 5 MHz, C = 0.1 V_{CC}/0.9 V_{CC}, Q = open	-	2(2)	mA
I_{CC0}(3)	Supply current (Write)	V_{CC} = 1.8 V or 1.7 V, during t_W, $\overline{S}$ = V_{CC}	-	5	mA
I_{CC1}	Supply current (Standby)	V_{CC} = 1.8 V or 1.7 V, $\overline{S}$ = V_{CC}, V_{IN} = V_{SS} or V_{CC}	-	1	µA
V_{IL}	Input low voltage	V_{CC} < 2.5 V	–0.45	0.25 V_{CC}	V
V_{IH}	Input high voltage	V_{CC} < 2.5 V	0.75 V_{CC}	V_{CC}+1	V
V_{OL}	Output low voltage	I_{OL} = 0.15 mA, V_{CC} = 1.8 V or 1.7 V	-	0.3	V
V_{OH}	Output high voltage	I_{OH} = –0.1 mA, V_{CC} = 1.8 V or 1.7 V	0.8 V_{CC}	-	V
V_{RES}(3)	Internal reset threshold voltage	-	1.0(4)	1.65(5)	V

1. If the application uses the M95160-R or M95160-DF devices with 2.5 V ≤V_{CC} ≤5.5 V and -40 °C ≤T_A ≤+85 °C, please refer to *Table 15: DC characteristics (M95160-W, device grade 6)*, rather than to the above table.
2. 2 mA at 3.5 MHz for the devices identified with process letters G or S.
3. Characterized only, not tested in production.
4. 0.5 V with the device identified by process letter K.
5. 1.5 V with the device identified by process letter K.

Table 17. AC characteristics (M95160-W, device grade 6)

Test conditions specified in *Table 8* and *Table 11*							
Symbol	Alt.	Parameter	V_{CC} = 2.5 to 5.5 V		(1) V_{CC} = 4.5 to 5.5 V		Unit
			Min.	Max.	Min.	Max.	
f_C	f_{SCK}	Clock frequency	DC	10	DC	20	MHz
t_{SLCH}	t_{CSS1}	$\overline{S}$ active setup time	30	-	15	-	ns
t_{SHCH}	t_{CSS2}	$\overline{S}$ not active setup time	30	-	15	-	ns
t_{SHSL}	t_{CS}	$\overline{S}$ deselect time	40	-	20	-	ns
t_{CHSH}	t_{CSH}	$\overline{S}$ active hold time	30	-	15	-	ns
t_{CHSL}	-	$\overline{S}$ not active hold time	30	-	15	-	ns
t_{CH} (2)	t_{CLH}	Clock high time	40	-	20	-	ns
t_{CL} (2)	t_{CLL}	Clock low time	40	-	20	-	ns
t_{CLCH} (3)	t_{RC}	Clock rise time	-	2	-	2	µs
t_{CHCL} (3)	t_{FC}	Clock fall time	-	2	-	2	µs
t_{DVCH}	t_{DSU}	Data in setup time	10	-	5	-	ns
t_{CHDX}	t_{DH}	Data in hold time	10	-	10	-	ns
t_{HHCH}	-	Clock low hold time after $\overline{HOLD}$ not active	30	-	15	-	ns
t_{HLCH}	-	Clock low hold time after $\overline{HOLD}$ active	30	-	15	-	ns
t_{CLHL}	-	Clock low set-up time before $\overline{HOLD}$ active	0	-	0	-	ns
t_{CLHH}	-	Clock low set-up time before $\overline{HOLD}$ not active	0	-	0	-	ns
t_{SHQZ} (3)	t_{DIS}	Output disable time	-	40	-	20	ns
t_{CLQV} (4)	t_V	Clock low to output valid	-	40	-	20	ns
t_{CLQX}	t_{HO}	Output hold time	0	-	0	-	ns
t_{QLQH} (3)	t_{RO}	Output rise time	-	40	-	20	ns
t_{QHQL} (3)	t_{FO}	Output fall time	-	40	-	20	ns
t_{HHQV}	t_{LZ}	$\overline{HOLD}$ high to output valid	-	40	-	20	ns
t_{HLQZ} (3)	t_{HZ}	$\overline{HOLD}$ low to output high-Z	-	40	-	20	ns
t_W	t_{WC}	Write time	-	5	-	5	ms

1. Only for devices identified by process letter K.
2. t_{CH} + t_{CL} must never be lower than the shortest possible clock period, $1/f_C$(max).
3. Characterized only, not tested in production.
4. t_{CLQV} must be compatible with t_{CL} (clock low time): if the SPI bus master offers a Read setup time t_{SU} = 0 ns, t_{CL} can be equal to (or greater than) t_{CLQV}; in all other cases, t_{CL} must be equal to (or greater than) t_{CLQV}+t_{SU}.

Table 18. AC characteristics (M95160-R or M95160-DF, device grade 6)

Test conditions specified in *Table 9* or *Table 10* and *Table 11*[1]					
Symbol	**Alt.**	**Parameter**	**Min.**	**Max.**	**Unit**
f_C	f_{SCK}	Clock frequency	D.C.	5	MHz
t_{SLCH}	t_{CSS1}	$\overline{S}$ active setup time	60	-	ns
t_{SHCH}	t_{CSS2}	$\overline{S}$ not active setup time	60	-	ns
t_{SHSL}	t_{CS}	$\overline{S}$ deselect time	90	-	ns
t_{CHSH}	t_{CSH}	$\overline{S}$ active hold time	60	-	ns
t_{CHSL}	-	$\overline{S}$ not active hold time	60	-	ns
t_{CH}[2]	t_{CLH}	Clock high time	80	-	ns
t_{CL}[2]	t_{CLL}	Clock low time	80	-	ns
t_{CLCH}[3]	t_{RC}	Clock rise time	-	2	µs
t_{CHCL}[3]	t_{FC}	Clock fall time	-	2	µs
t_{DVCH}	t_{DSU}	Data in setup time	20	-	ns
t_{CHDX}	t_{DH}	Data in hold time	20	-	ns
t_{HHCH}	-	Clock low hold time after $\overline{HOLD}$ not active	60	-	ns
t_{HLCH}	-	Clock low hold time after $\overline{HOLD}$ active	60	-	ns
t_{CLHL}	-	Clock low set-up time before $\overline{HOLD}$ active	0	-	ns
t_{CLHH}	-	Clock low set-up time before $\overline{HOLD}$ not active	0	-	ns
t_{SHQZ}[3]	t_{DIS}	Output disable time	-	80	ns
t_{CLQV}	t_V	Clock low to output valid	-	80	ns
t_{CLQX}	t_{HO}	Output hold time	0	-	ns
t_{QLQH}[3]	t_{RO}	Output rise time	-	80	ns
t_{QHQL}[3]	t_{FO}	Output fall time	-	80	ns
t_{HHQV}	t_{LZ}	$\overline{HOLD}$ high to output valid	-	80	ns
t_{HLQZ}[3]	t_{HZ}	$\overline{HOLD}$ low to output high-Z	-	80	ns
t_W	t_{WC}	Write time	-	5	ms

1. If the application uses the M95160-R or M95160-DF devices at 2.5 V ≤V_{CC} ≤5.5 V and -40 °C ≤T_A ≤+85 °C, please refer to *Table 17: AC characteristics (M95160-W, device grade 6)*, rather than to the above table.
2. t_{CH} + t_{CL} must never be lower than the shortest possible clock period, 1/f_C(max).
3. Characterized only, not tested in production.

Table 19. AC characteristics (M95160-F[1], device grade 6)

Test conditions specified in *Table 10* and *Table 11*					
Symbol	**Alt.**	**Parameter**	**Min.**	**Max.**	**Unit**
f_C	f_{SCK}	Clock frequency	D.C.	3.5	MHz
t_{SLCH}	t_{CSS1}	$\overline{S}$ active setup time	85	-	ns
t_{SHCH}	t_{CSS2}	$\overline{S}$ not active setup time	85	-	ns
t_{SHSL}	t_{CS}	$\overline{S}$ deselect time	120	-	ns
t_{CHSH}	t_{CSH}	$\overline{S}$ active hold time	85	-	ns
t_{CHSL}	-	$\overline{S}$ not active hold time	85	-	ns
t_{CH}[2]	t_{CLH}	Clock high time	110	-	ns
t_{CL}[2]	t_{CLL}	Clock low time	110	-	ns
t_{CLCH}[3]	t_{RC}	Clock rise time	-	2	µs
t_{CHCL}[3]	t_{FC}	Clock fall time	-	2	µs
t_{DVCH}	t_{DSU}	Data in setup time	30	-	ns
t_{CHDX}	t_{DH}	Data in hold time	30	-	ns
t_{HHCH}	-	Clock low hold time after $\overline{HOLD}$ not active	85	-	ns
t_{HLCH}	-	Clock low hold time after $\overline{HOLD}$ active	85	-	ns
t_{CLHL}	-	Clock low set-up time before $\overline{HOLD}$ active	0	-	0
t_{CLHH}	-	Clock low set-up time before $\overline{HOLD}$ not active	0	-	0
t_{SHQZ}[3]	t_{DIS}	Output disable time	-	120	ns
t_{CLQV}	t_V	Clock low to output valid	-	120	ns
t_{CLQX}	t_{HO}	Output hold time	0	-	ns
t_{QLQH}[3]	t_{RO}	Output rise time	-	100	ns
t_{QHQL}[3]	t_{FO}	Output fall time	-	100	ns
t_{HHQV}	t_{LZ}	$\overline{HOLD}$ high to output valid	-	110	ns
t_{HLQZ}[3]	t_{HZ}	$\overline{HOLD}$ low to output high-Z	-	110	ns
t_W	t_{WC}	Write time	-	5	ms

1. Not recommended for new designs, please refer to *Table 18: AC characteristics (M95160-R or M95160-DF, device grade 6)*.
2. $t_{CH} + t_{CL}$ must never be lower than the shortest possible clock period, $1/f_C(max)$.
3. Characterized only, not tested in production.

The values in the following table must not be considered for any new design.

Table 20. AC characteristics (M95160-W, device grade 6)
End of life products: these values apply only to M95160-WMN6TP/S and M95160-WDW6TP/S devices)

Test conditions specified in *Table 8* and *Table 11*					
Symbol	**Alt.**	**Parameter**	**Min.**	**Max.**	**Unit**
f_C	f_{SCK}	Clock frequency	D.C.	5	MHz
t_{SLCH}	t_{CSS1}	$\overline{S}$ active setup time	90	-	ns
t_{SHCH}	t_{CSS2}	$\overline{S}$ not active setup time	90	-	ns
t_{SHSL}	t_{CS}	$\overline{S}$ deselect time	100	-	ns
t_{CHSH}	t_{CSH}	$\overline{S}$ active hold time	90	-	ns
t_{CHSL}	-	$\overline{S}$ not active hold time	90	-	ns
t_{CH}(1)	t_{CLH}	Clock high time	90	-	ns
t_{CL}(1)	t_{CLL}	Clock low time	90	-	ns
t_{CLCH}(2)	t_{RC}	Clock rise time	-	1	µs
t_{CHCL}(2)	t_{FC}	Clock fall time	-	1	µs
t_{DVCH}	t_{DSU}	Data in setup time	20	-	ns
t_{CHDX}	t_{DH}	Data in hold time	30	-	ns
t_{HHCH}	-	Clock low hold time after $\overline{HOLD}$ not active	70	-	ns
t_{HLCH}	-	Clock low hold time after $\overline{HOLD}$ active	40	-	ns
t_{CLHL}	-	Clock low set-up time before $\overline{HOLD}$ active	0	-	ns
t_{CLHH}	-	Clock low set-up time before $\overline{HOLD}$ not active	0	-	ns
t_{SHQZ}(2)	t_{DIS}	Output disable time	-	100	ns
t_{CLQV}	t_V	Clock low to output valid	-	60	ns
t_{CLQX}	t_{HO}	Output hold time	0	-	ns
t_{QLQH}(2)	t_{RO}	Output rise time	-	50	ns
t_{QHQL}(2)	t_{FO}	Output fall time	-	50	ns
t_{HHQV}	t_{LZ}	$\overline{HOLD}$ high to output valid	-	50	ns
t_{HLQZ}(2)	t_{HZ}	$\overline{HOLD}$ low to output high-Z	-	100	ns
t_W	t_{WC}	Write time	-	5	ms

1. $t_{CH} + t_{CL}$ must never be lower than the shortest possible clock period, $1/f_C(max)$.
2. Characterized only, not tested in production.

Figure 20. Serial input timing

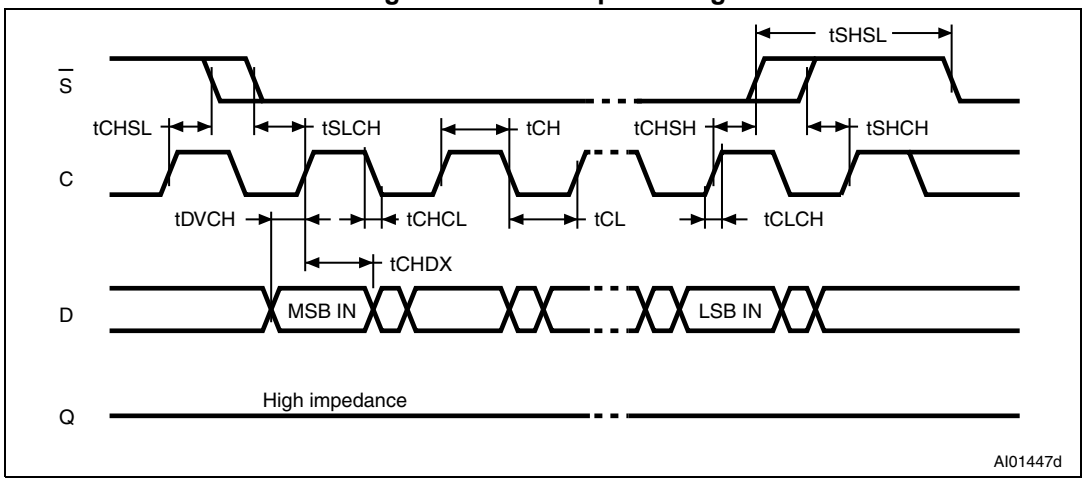

Figure 21. Hold timing

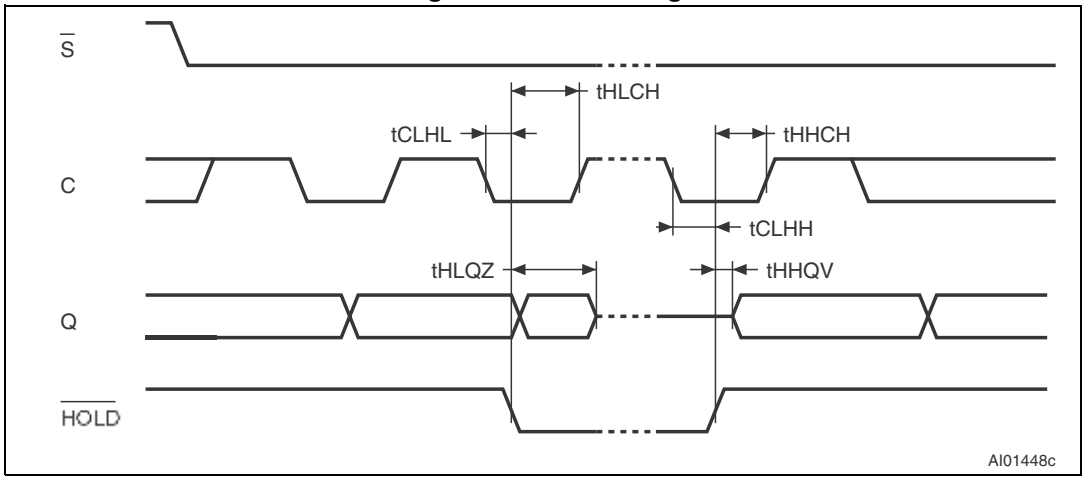

Figure 22. Serial output timing

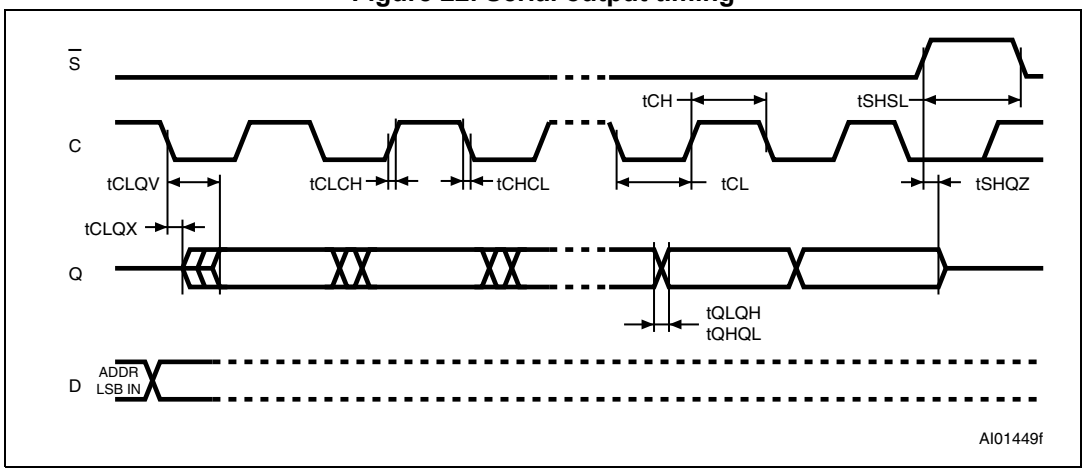

10 Package information

In order to meet environmental requirements, ST offers these devices in different grades of ECOPACK® packages, depending on their level of environmental compliance. ECOPACK® specifications, grade definitions and product status are available at: *www.st.com*. ECOPACK® is an ST trademark.

10.1 SO8N package information

Figure 23. SO8N – 8-lead plastic small outline, 150 mils body width, package outline

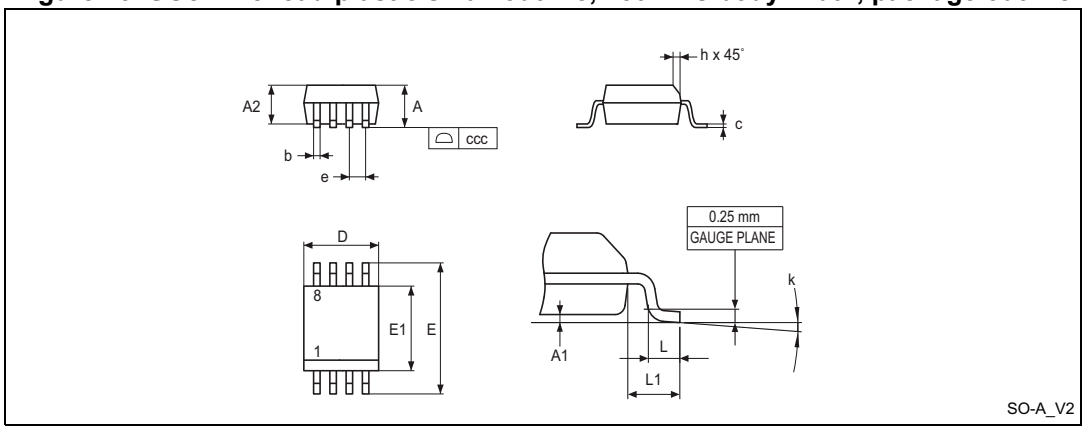

1. Drawing is not to scale.

Table 21. SO8N – 8-lead plastic small outline, 150 mils body width, package mechanical data

Symbol	millimeters			inches[1]		
	Min.	Typ.	Max.	Min.	Typ.	Max.
A	-	-	1.750	-	-	0.0689
A1	0.100	-	0.250	0.0039	-	0.0098
A2	1.250	-	-	0.0492	-	-
b	0.280	-	0.480	0.0110	-	0.0189
c	0.170	-	0.230	0.0067	-	0.0091
D	4.800	4.900	5.000	0.1890	0.1929	0.1969
E	5.800	6.000	6.200	0.2283	0.2362	0.2441
E1	3.800	3.900	4.000	0.1496	0.1535	0.1575
e	-	1.270	-	-	0.0500	-
h	0.250	-	0.500	0.0098	-	0.0197
k	0°	-	8°	0°	-	8°
L	0.400	-	1.270	0.0157	-	0.0500

Table 21. SO8N – 8-lead plastic small outline, 150 mils body width, package mechanical data (continued)

Symbol	millimeters			inches[1]		
	Min.	Typ.	Max.	Min.	Typ.	Max.
L1	-	1.040	-	-	0.0409	-
ccc	-	-	0.100	-	-	0.0039

1. Values in inches are converted from mm and rounded to four decimal digits.

Figure 24. SO8N – 8-lead plastic small outline, 150 mils body width, package recommended footprint

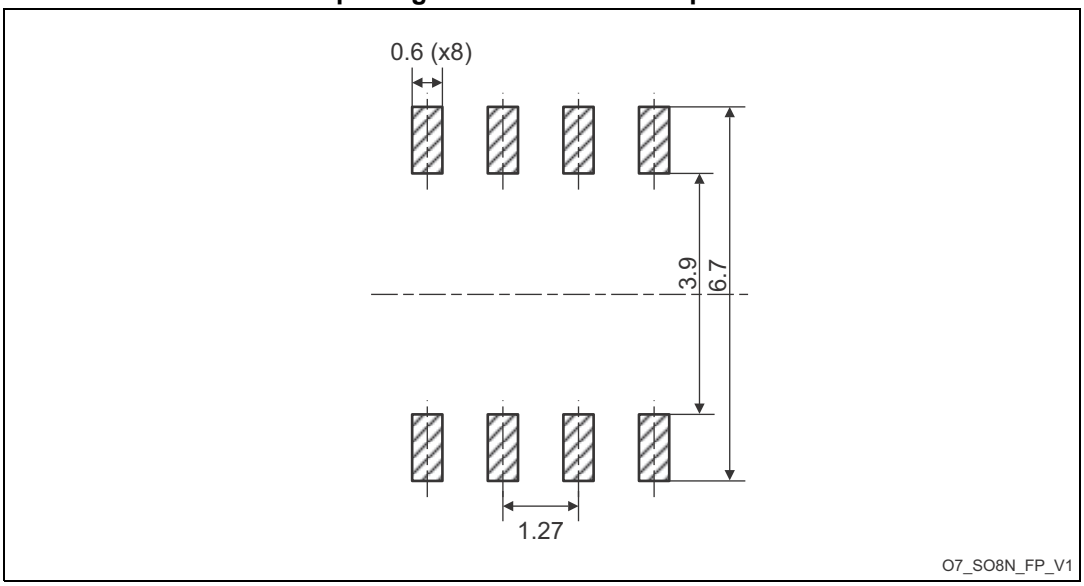

1. Dimensions are expressed in millimeters.

10.2 TSSOP8 package information

Figure 25.TSSOP8 – 8-lead thin shrink small outline, 3 x 4.4 mm, 0.5 mm pitch, package outline

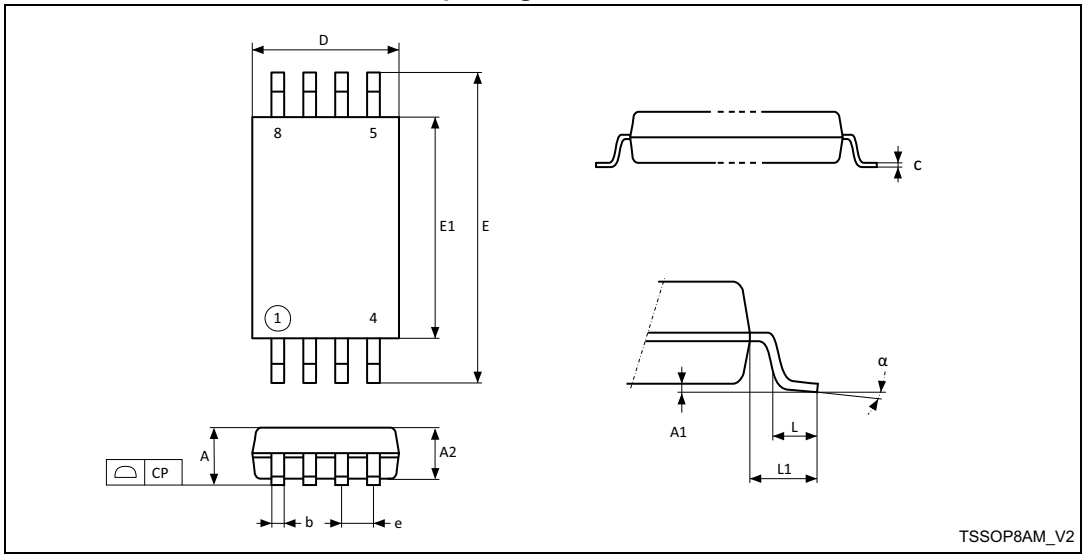

1. Drawing is not to scale.

Table 22. TSSOP8 – 8-lead thin shrink small outline, 3 x 4.4 mm, 0.5 mm pitch, package mechanical data

Symbol	millimeters			inches(1)		
	Min.	Typ.	Max.	Min.	Typ.	Max.
A	-	-	1.200	-	-	0.0472
A1	0.050	-	0.150	0.0020	-	0.0059
A2	0.800	1.000	1.050	0.0315	0.0394	0.0413
b	0.190	-	0.300	0.0075	-	0.0118
c	0.090	-	0.200	0.0035	-	0.0079
CP	-	-	0.100	-	-	0.0039
D	2.900	3.000	3.100	0.1142	0.1181	0.1220
e	-	0.650	-	-	0.0256	-
E	6.200	6.400	6.600	0.2441	0.2520	0.2598
E1	4.300	4.400	4.500	0.1693	0.1732	0.1772
L	0.450	0.600	0.750	0.0177	0.0236	0.0295
L1	-	1.000	-	-	0.0394	-
α	0°	-	8°	0°	-	8°

1. Values in inches are converted from mm and rounded to four decimal digits.

10.3 UFDFN8 package information

Figure 26. UFDFN8 - 8-lead, 2 × 3 mm, 0.5 mm pitch ultra thin profile fine pitch dual flat package outline

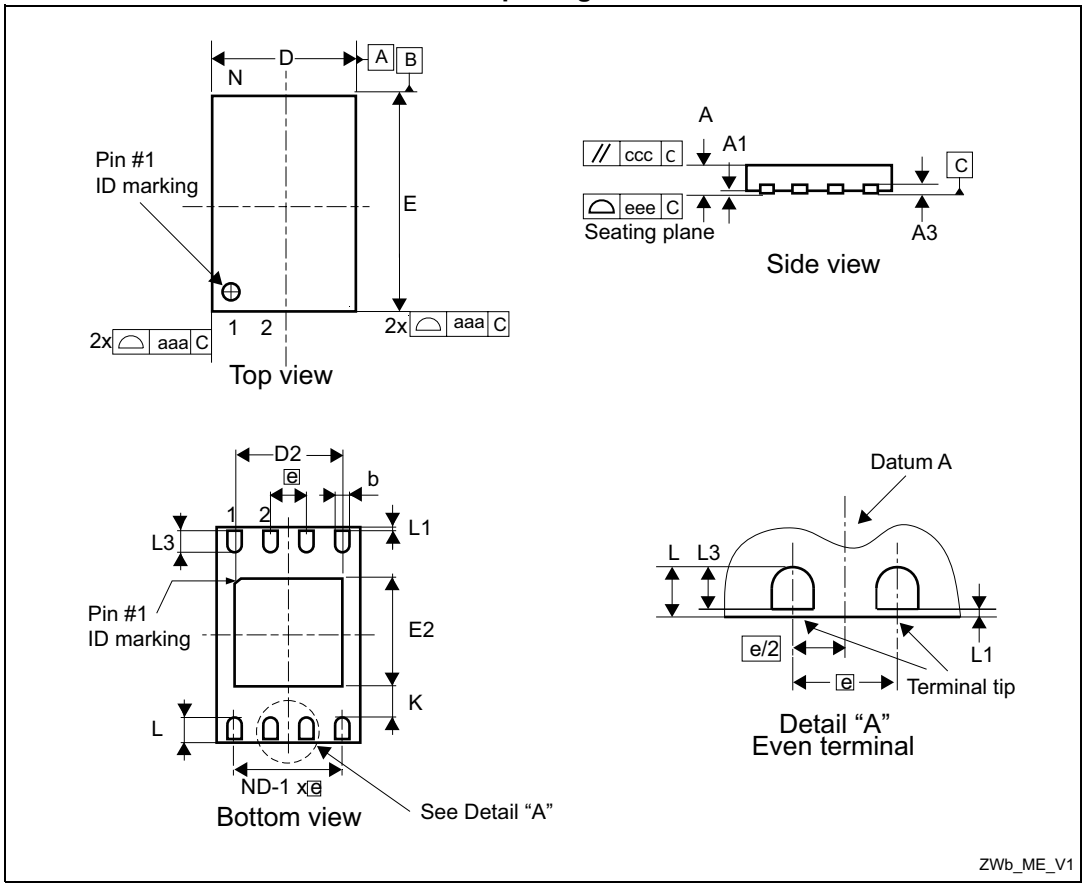

1. Max. package warpage is 0.05 mm.
2. Exposed copper is not systematic and can appear partially or totally according to the cross section.
3. Drawing is not to scale.
4. The central pad (the area E2 by D2 in the above illustration) must be either connected to V_{SS} or left floating (not connected) in the end application.

Table 23. UFDFN8 - 8-lead, 2 × 3 mm, 0.5 mm pitch ultra thin profile fine pitch dual flat package mechanical data

Symbol	millimeters			inches(1)		
	Min	Typ	Max	Min	Typ	Max
A	0.450	0.550	0.600	0.0177	0.0217	0.0236
A1	0.000	0.020	0.050	0.0000	0.0008	0.0020
b(2)	0.200	0.250	0.300	0.0079	0.0098	0.0118
D	1.900	2.000	2.100	0.0748	0.0787	0.0827
D2	1.200	-	1.600	0.0472	-	0.0630
E	2.900	3.000	3.100	0.1142	0.1181	0.1220

Table 23. UFDFN8 - 8-lead, 2 × 3 mm, 0.5 mm pitch ultra thin profile fine pitch dual flat package mechanical data (continued)

Symbol	millimeters			inches[1]		
	Min	Typ	Max	Min	Typ	Max
E2	1.200	-	1.600	0.0472	-	0.0630
e	-	0.500	-	0.0197		
K	0.300	-	-	0.0118	-	-
L	0.300	-	0.500	0.0118	-	0.0197
L1	-	-	0.150	-	-	0.0059
L3	0.300	-	-	0.0118	-	-
aaa	-	-	0.150	-	-	0.0059
bbb	-	-	0.100	-	-	0.0039
ccc	-	-	0.100	-	-	0.0039
ddd	-	-	0.050	-	-	0.0020
eee[3]	-	-	0.080	-	-	0.0031

1. Values in inches are converted from mm and rounded to 4 decimal digits.
2. Dimension b applies to plated terminal and is measured between 0.15 and 0.30 mm from the terminal tip.
3. Applied for exposed die paddle and terminals. Exclude embedding part of exposed die paddle from measuring.

10.4 WLCSP package information

Figure 27. WLCSP - 8-bump, 1.350 x 1.365 mm, 0.4 mm pitch wafer level chip scale package outline

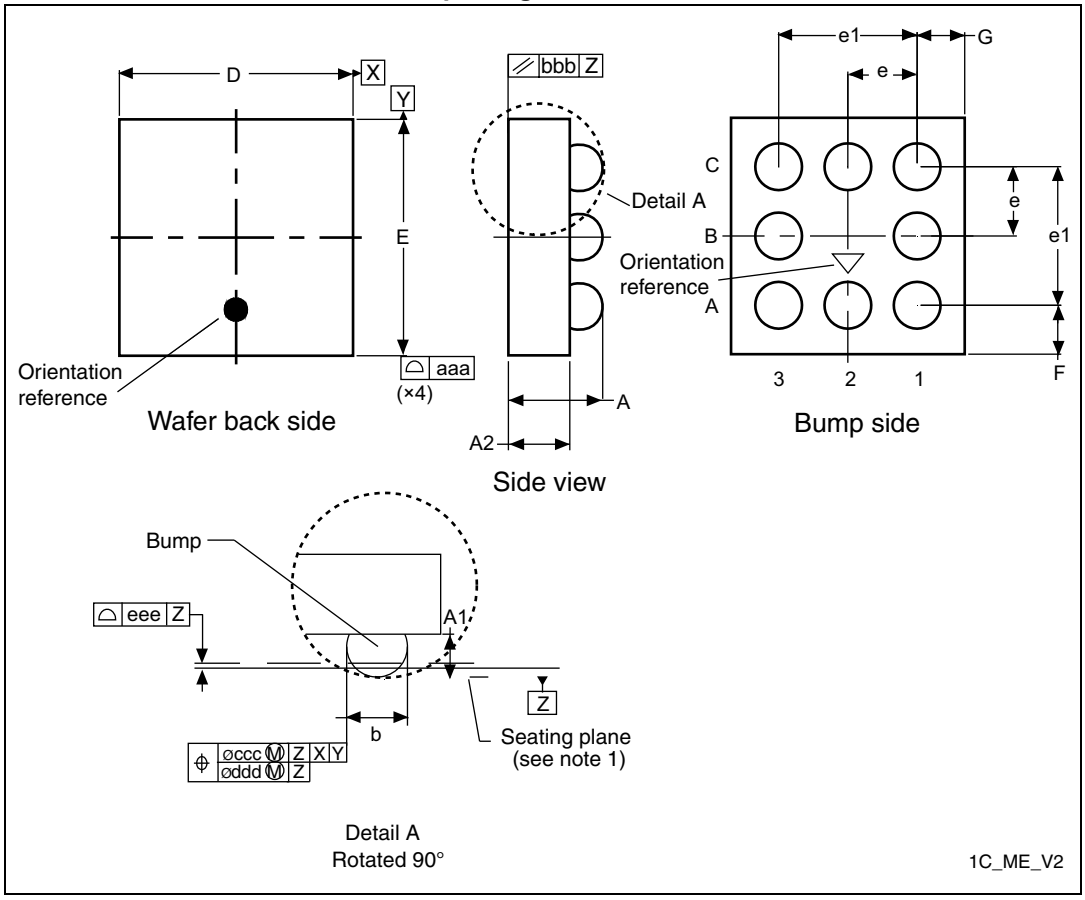

1. Drawing is not to scale.

Table 24. WLCSP - 8-bump, 1.350 x 1.365 mm, 0.4 mm pitch wafer level chip scale package mechanical data

Symbol	millimeters			inches[1]		
	Min	Typ	Max	Min	Typ	Max
A	0.490	0.545	0.600	0.0193	0.0215	0.0236
A1	-	0.190	-	-	0.0075	-
A2	-	0.355	-	-	0.0140	-
b[2]	-	0.270	-	-	0.0106	-
D	-	1.350	1.475	-	0.0531	0.0581
E	-	1.365	1.490	-	0.0537	0.0587
e	-	0.400	-	-	0.0157	-
e1	-	0.800	-	-	0.0315	-
F	-	0.282	-	-	0.0111	-

Table 24. WLCSP - 8-bump, 1.350 x 1.365 mm, 0.4 mm pitch wafer level chip scale package mechanical data (continued)

G	-	0.275	-	-	0.0108	-
aaa	-	-	0.110	-	-	0.0043
bbb	-	-	0.110	-	-	0.0043
ccc	-	-	0.110	-	-	0.0043
ddd	-	-	0.060	-	-	0.0024
eee	-	-	0.060	-	-	0.0024

1. Values in inches are converted from mm and rounded to 4 decimal digits.
2. Dimension is measured at the maximum bump diameter parallel to primary datum Z.

Figure 28. WLCSP - 8-bump, 1.350 x 1.365 mm, 0.4 mm pitch wafer level chip scale package recommended footprint

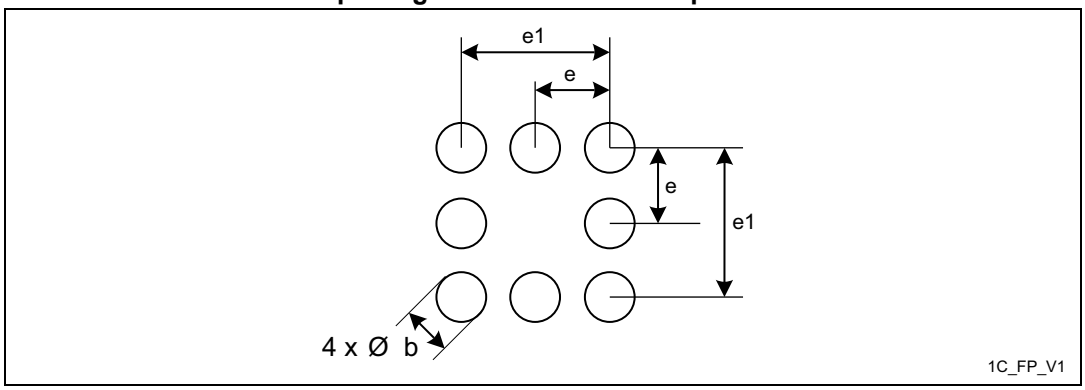

1. Dimensions are expressed in millimeters.

11 Part numbering

Table 25. Ordering information scheme

Example: M95160-D W MN 6 T P /S

Device type

M95 = SPI serial access EEPROM

Device function

160 = 16 Kbit (2048 x 8)

160-D = 16 Kbit (2048 x 8) plus Identification page

Operating voltage

W = V_{CC} = 2.5 to 5.5 V

R = V_{CC} = 1.8 to 5.5 V

F = V_{CC} = 1.7 to 5.5 V

Package(1)

MN = SO8 (150 mil width)

DW = TSSOP8 (169 mil width)

MC = UFDFPN8 (MLP8)

CS = WLCSP

Device grade

6 = Industrial temperature range, –40 to 85 °C
Device tested with standard test flow

Option

T = Tape and reel packing

blank = tube packing

Plating technology

G or P = RoHS compliant and halogen-free
(ECOPACK2®)

Process(2)

/G or /S = Manufacturing technology code

1. All packages are ECOPACK2® (RoHS-compliant and free of brominated, chlorinated and antimony-oxide flame retardants).
2. The process letters apply to WLCSP devices only. The process letters appear on the device package (marking) and on the shipment box. Please contact your nearest ST Sales Office for further information.

Table 26. Ordering information scheme (unsawn wafer)(1)

Example: M95160-D - F K W 20 I /85

Device type

M95 = SPI serial access EEPROM

Device function

160-D = 16 Kbit (2048 x 8 bit) plus identification page

Operating voltage

F = V_{CC} = 1.7 V to 5.5 V

Process

K = F8H

Delivery form

W = Unsawn wafer

Wafer thickness

20 = Non-backlapped wafer

Wafer testing

I = Inkless test

Device grade

85 = 0°C to 85°C

1. For all information concerning the M95160 delivered in unsawn wafer, please contact your nearest ST Sales Office.

Note: Parts marked as “ES”, “E” or accompanied by an Engineering Sample notification letter, are not yet qualified and therefore not yet ready to be used in production and any consequences deriving from such usage will not be at ST charge. In no event, ST will be liable for any customer usage of these engineering samples in production. ST Quality has to be contacted prior to any decision to use these Engineering samples to run qualification activity.

12 Revision history

Table 27. Document revision history

Date	Revision	Changes
22-Mar-2012	1	Initial release.
17-Dec-2012	2	Updated: – All information about package UFDFPN8 – Introduction of *Package information* – *Section 7.2: Initial delivery state*
08-Jan-2013	3	Updated plating technology
16-Sep-2013	4	Replaced “M95160-F” by “M95160-DF” part number. Updated: – Package figure on cover page – *Features*: High-speed clock frequency, write cycles and data retention – *Section 10: Package information* – *Figure 4: Block diagram* – *Section 6: Instructions*: updated introduction and added Sections *6.7* to *6.10* – *Section 7.2: Initial delivery state* – footnote *1* in *Table 7: Absolute maximum ratings* – *Table 15: DC characteristics (M95160-W, device grade 6)*, *Table 16: DC characteristics (M95160-R or M95160-DF, device grade 6)*, *Table 17: AC characteristics (M95160-W, device grade 6)* and *Table 18: AC characteristics (M95160-R or M95160-DF, device grade 6)*. – *Table 25: Ordering information scheme* Added *Table 12: Cycling performance* and *Table 13: Memory cell data retention*.
11-Mar-2014	5	Added in cover page “Write lockable Page (Identification page)"
21-May-2014	6	Updated *Figure 3: WLCSP connections (top view, marking side, with bumps on the underside)*. Deleted Caution in *Figure 3: WLCSP connections (top view, marking side, with bumps on the underside)*. Updated Footnote *2.* in *Figure 25: UFDFPN8 (MLP8) – 8-lead ultra thin fine pitch dual flat no lead, package outline*. Updated *Table 23: UFDFPN8 (MLP8) – 8-lead ultra thin fine pitch dual flat package no lead 2 x 3 mm, data.* and *Table 24: M95160-RCS6TP/S WLCSP package mechanical data*. Updated *Figure 26: M95160-RCS6TP/S WLCSP package outline*.

Table 27. Document revision history (continued)

Date	Revision	Changes
06-Oct-2014	7	Updated package information in *Features*. Updated footnotes: – *2* in *Table 7: Absolute maximum ratings*; – *1* in *Table 15: DC characteristics (M95160-W, device grade 6)*; – *1* in *Table 25: Ordering information scheme*. Updated *Table 25: Ordering information scheme*.
05-Oct-2015	8	Added Unsawn wafer option and updated package information in *Features*. Updated *Figure 4: Block diagram* and *Section 5.1.3: Power-up conditions*. Updated *Section 10: Package information* and its subsections. Added *Table 26: Ordering information scheme (unsawn wafer)* in *Section 11*.

IMPORTANT NOTICE – PLEASE READ CAREFULLY

STMicroelectronics NV and its subsidiaries (“ST”) reserve the right to make changes, corrections, enhancements, modifications, and improvements to ST products and/or to this document at any time without notice. Purchasers should obtain the latest relevant information on ST products before placing orders. ST products are sold pursuant to ST’s terms and conditions of sale in place at the time of order acknowledgement.

Purchasers are solely responsible for the choice, selection, and use of ST products and ST assumes no liability for application assistance or the design of Purchasers’ products.

No license, express or implied, to any intellectual property right is granted by ST herein.

Resale of ST products with provisions different from the information set forth herein shall void any warranty granted by ST for such product.

ST and the ST logo are trademarks of ST. All other product or service names are the property of their respective owners.

Information in this document supersedes and replaces information previously supplied in any prior versions of this document.

© 2015 STMicroelectronics – All rights reserved