STD80N6F6

Automotive-grade N-channel 60 V, 4.4 mΩ typ., 80 A STripFET™ F6 Power MOSFET in a DPAK package

Datasheet - production data

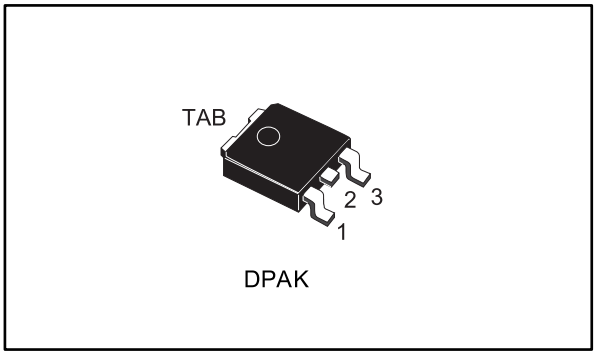

Figure 1: Internal schematic diagram

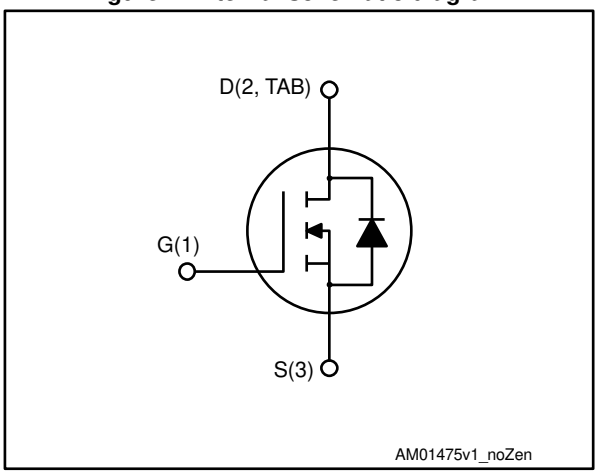

Features

Order code	V_{DS}	$R_{DS(on)}$ max.	I_D
STD80N6F6	60 V	5 mΩ	80 A

- AEC-Q101 qualified
- Very low on-resistance
- Very low gate charge
- High avalanche ruggedness
- Low gate drive power loss

Applications

- Switching applications

Description

This device is an N-channel Power MOSFET developed using the STripFET™ F6 technology with a new trench gate structure. The resulting Power MOSFET exhibits very low $R_{DS(on)}$ in all packages.

Table 1: Device summary

Order code	Marking	Package	Packaging
STD80N6F6	80N6F6	DPAK	Tape and reel

This is information on a product in full production.

www.st.com

Contents

1 Electrical ratings 3
2 Electrical characteristics 4
2.1 Electrical characteristics (curves) 6
3 Test circuits 8
4 Package mechanical data 9
4.1 DPAK (TO-252) type A2 package information 10
4.2 DPAK (TO-252) tape and reel mechanical data 13
5 Revision history 15

1 Electrical ratings

Table 2: Absolute maximum ratings

Symbol	Parameter	Value	Unit
V_{DS}	Drain-source voltage	60	V
V_{GS}	Gate-source voltage	±20	V
I_D (1)	Drain current (continuous) at T_C = 25 °C	80	A
I_D (1)	Drain current (continuous) at T_C= 100 °C	80	A
I_{DM} (2)	Drain current (pulsed)	320	A
P_{TOT}	Total dissipation at T_C = 25 °C	120	W
T_{stg}	Storage temperature range	- 55 to 175	°C
T_j	Operating junction temperature range		

Notes:

(1)Current limited by package.

(2) Pulse width limited by safe operating area.

Table 3: Thermal data

Symbol	Parameter	Value	Unit
$R_{thj\text{-}case}$	Thermal resistance junction-case	1.25	°C/W
$R_{thj\text{-}pcb}$ (1)	Thermal resistance junction-pcb	50	°C/W

Notes:

(1)When mounted on a 1-inch² FR-4 board, 2oz Cu.

2 Electrical characteristics

(T_C = 25 °C unless otherwise specified).

Table 4: Static

Symbol	Parameter	Test conditions	Min.	Typ.	Max.	Unit
$V_{(BR)DSS}$	Drain-source breakdown voltage	V_{GS} = 0 V, I_D = 250 µA	60			V
I_{DSS}	Zero gate voltage drain current	V_{GS} = 0 V, V_{DS} = 60 V			1	µA
		V_{GS} = 0 V, V_{DS} = 60 V, T_j = 125 °C (1)			100	µA
I_{GSS}	Gate-body leakage current	V_{DS} = 0 V, V_{GS} = ±20 V			±100	nA
$V_{GS(th)}$	Gate threshold voltage	V_{DS} = V_{GS}, I_D = 250 µA	3		4.5	V
$R_{DS(on)}$	Static drain-source on-resistance	V_{GS} = 10 V, I_D= 40 A		4.4	5	mΩ

Notes:

(1)Defined by design, not subject to production test.

Table 5: Dynamic

Symbol	Parameter	Test conditions	Min.	Typ.	Max.	Unit
C_{iss}	Input capacitance	V_{DS} = 25 V, f = 1 MHz, V_{GS} = 0 V	-	8325	-	pF
C_{oss}	Output capacitance		-	500	-	pF
C_{rss}	Reverse transfer capacitance		-	400	-	pF
Q_g	Total gate charge	V_{DD} = 30 V, I_D = 80 A, V_{GS} = 0 to 10 V (see *Figure 14: "Test circuit for gate charge behavior"*)	-	147	-	nC
Q_{gs}	Gate-source charge		-	44	-	nC
Q_{gd}	Gate-drain charge		-	46	-	nC

Table 6: Switching times

Symbol	Parameter	Test conditions	Min.	Typ.	Max.	Unit
$t_{d(on)}$	Turn-on delay time	V_{DD} = 30 V, I_D = 40 A, R_G = 4.7 Ω, V_{GS} = 10 V (see *Figure 13: "Test circuit for resistive load switching times"* and *Figure 18: "Switching time waveform"*)	-	40	-	ns
t_r	Rise time		-	71	-	ns
$t_{d(off)}$	Turn-off delay time		-	132	-	ns
t_f	Fall time		-	40	-	ns

Table 7: Source-drain diode

Symbol	Parameter	Test conditions	Min.	Typ.	Max.	Unit
I_{SD} (1)	Source-drain current		-		80	A
I_{SDM} (2)	Source-drain current (pulsed)		-		320	A
V_{SD} (3)	Forward on voltage	V_{GS} = 0 V, I_{SD} = 80 A	-		1.3	V
t_{rr}	Reverse recovery time	I_{SD} = 80 A, di/dt = 100 A/µs, V_{DD} = 48 V, T_j = 150 °C (see *Figure 15: "Test circuit for inductive load switching and diode recovery times"*)	-	46		ns
Q_{rr}	Reverse recovery charge		-	65		nC
I_{RRM}	Reverse recovery current		-	2.8		A

Notes:

(1) Current limited by package.

(2) Pulse width limited by safe operating area.

(3) Pulsed: pulse duration = 300 µs, duty cycle 1.5%.

2.1 Electrical characteristics (curves)

Figure 2: Safe operating area

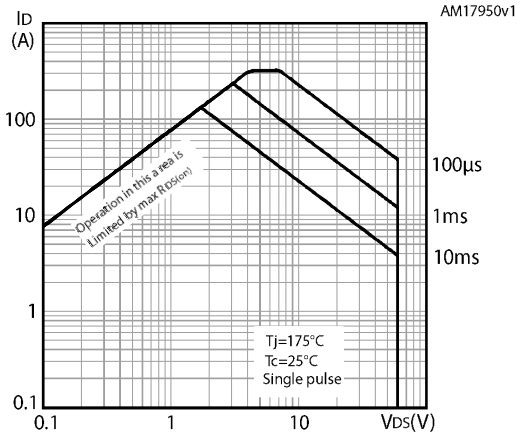

Figure 3: Thermal impedance

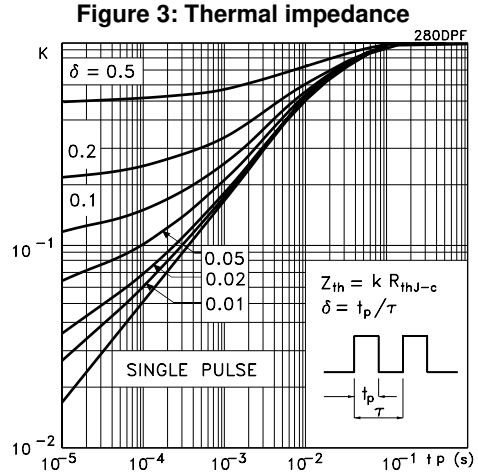

Figure 4: Output characteristics

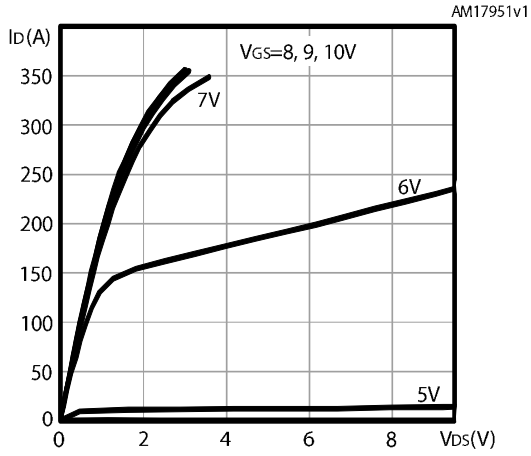

Figure 5: Transfer characteristics

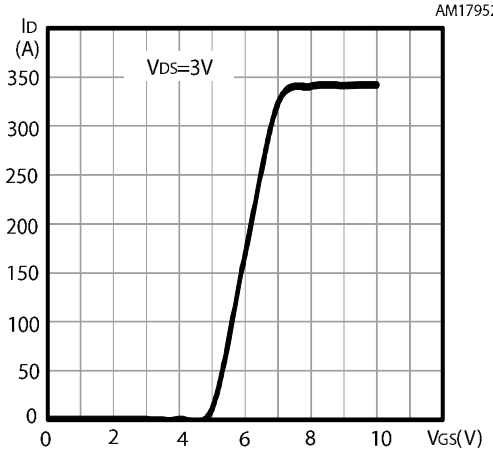

Figure 6: Normalized gate threshold voltage vs. temperature

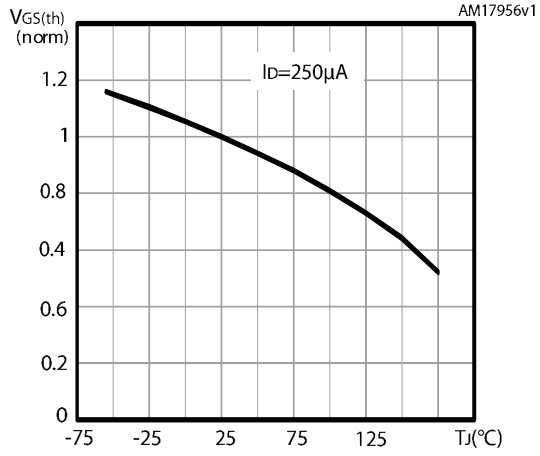

Figure 7: Normalized $V_{(BR)DSS}$ vs. temperature

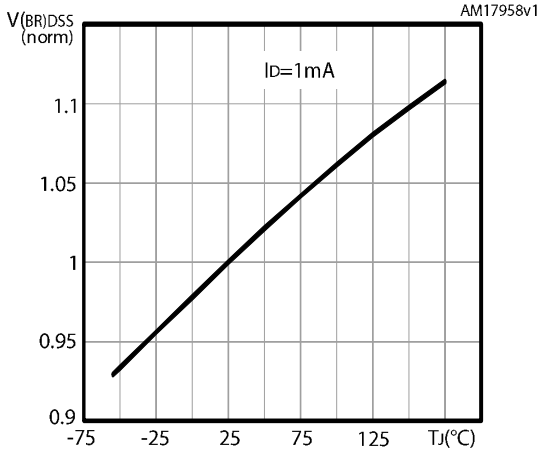

Figure 8: Static drain-source on-resistance

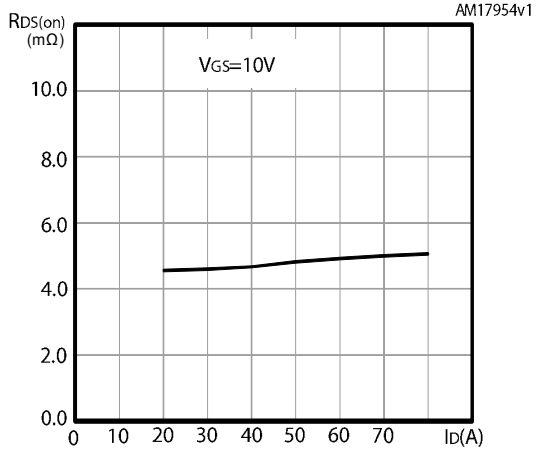

Figure 9: Normalized on-resistance vs. temperature

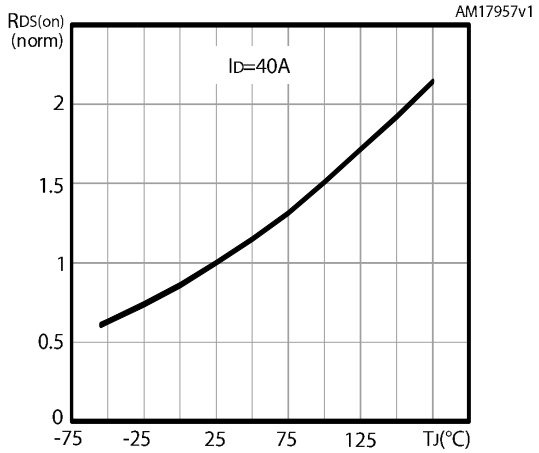

Figure 10: Gate charge vs. gate-source voltage

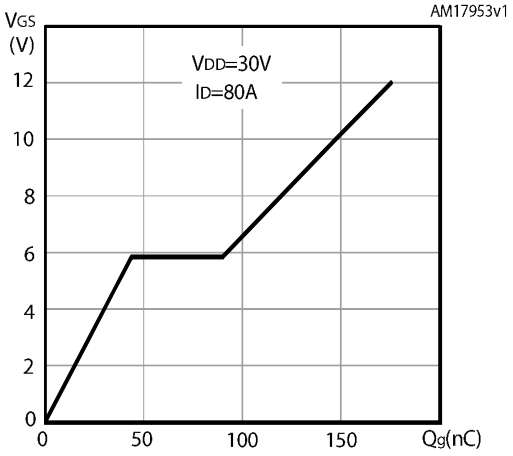

Figure 11: Capacitance variations

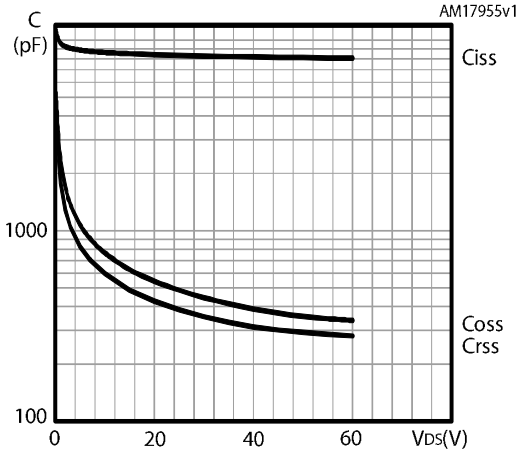

Figure 12: Source- drain diode forward characteristics

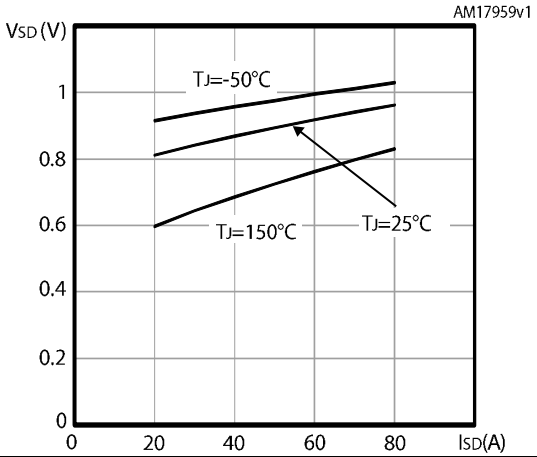

3 Test circuits

Figure 13: Test circuit for resistive load switching times

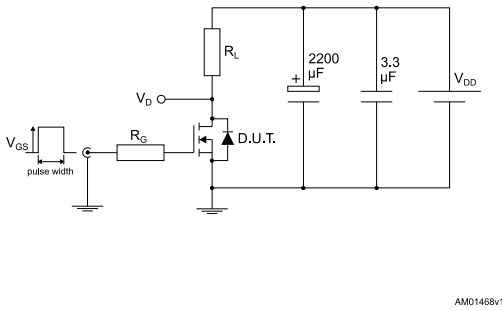

Figure 14: Test circuit for gate charge behavior

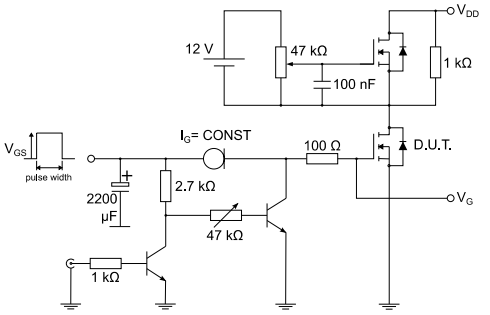

Figure 15: Test circuit for inductive load switching and diode recovery times

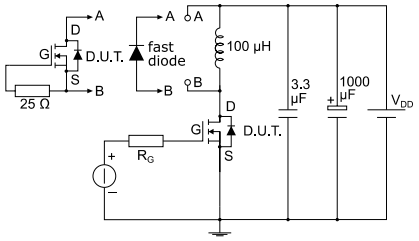

Figure 16: Unclamped inductive load test circuit

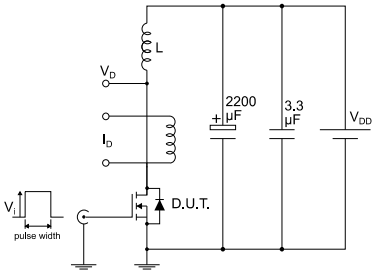

Figure 17: Unclamped inductive waveform

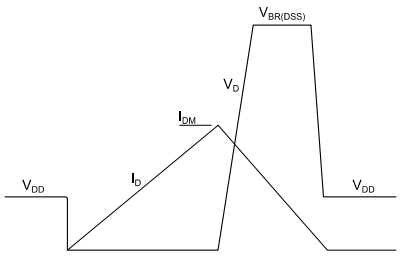

Figure 18: Switching time waveform

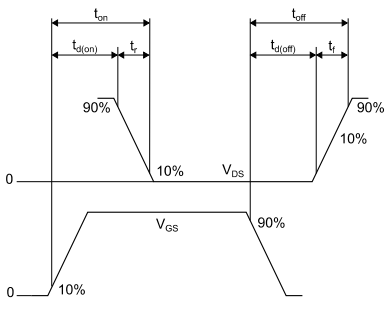

4 Package mechanical data

In order to meet environmental requirements, ST offers these devices in different grades of ECOPACK® packages, depending on their level of environmental compliance. ECOPACK® specifications, grade definitions and product status are available at: ***www.st.com***. ECOPACK® is an ST trademark.

4.1 DPAK (TO-252) type A2 package information

Figure 19: DPAK (TO-252) type A2 package outline

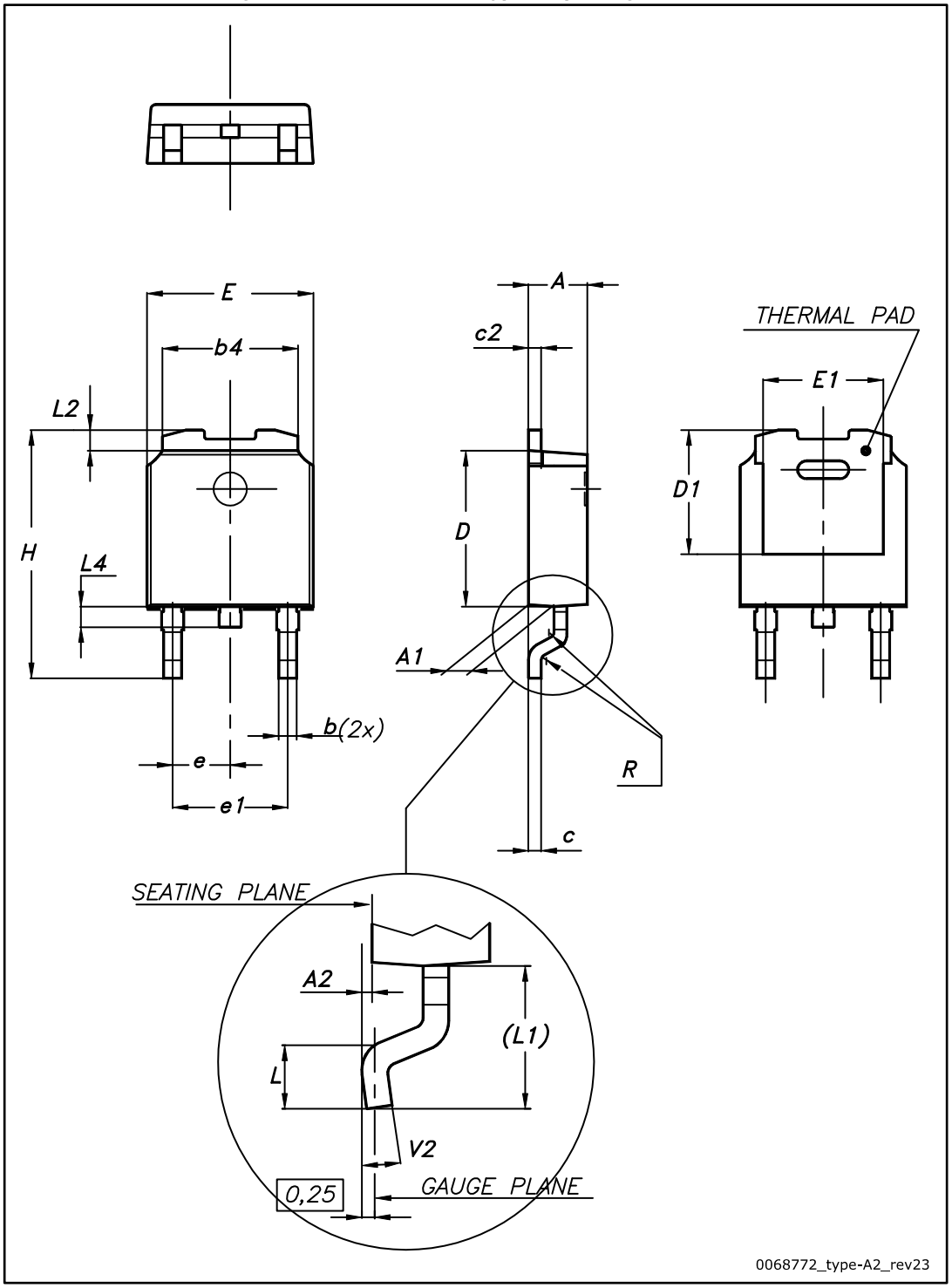

Table 8: DPAK (TO-252) type A2 mechanical data

Dim.	mm		
	Min.	Typ.	Max.
A	2.20		2.40
A1	0.90		1.10
A2	0.03		0.23
b	0.64		0.90
b4	5.20		5.40
c	0.45		0.60
c2	0.48		0.60
D	6.00		6.20
D1	4.95	5.10	5.25
E	6.40		6.60
E1	5.10	5.20	5.30
e	2.16	2.28	2.40
e1	4.40		4.60
H	9.35		10.10
L	1.00		1.50
L1	2.60	2.80	3.00
L2	0.65	0.80	0.95
L4	0.60		1.00
R		0.20	
V2	0°		8°

Figure 20: DPAK (TO-252) type A2 recommended footprint (dimensions are in mm)

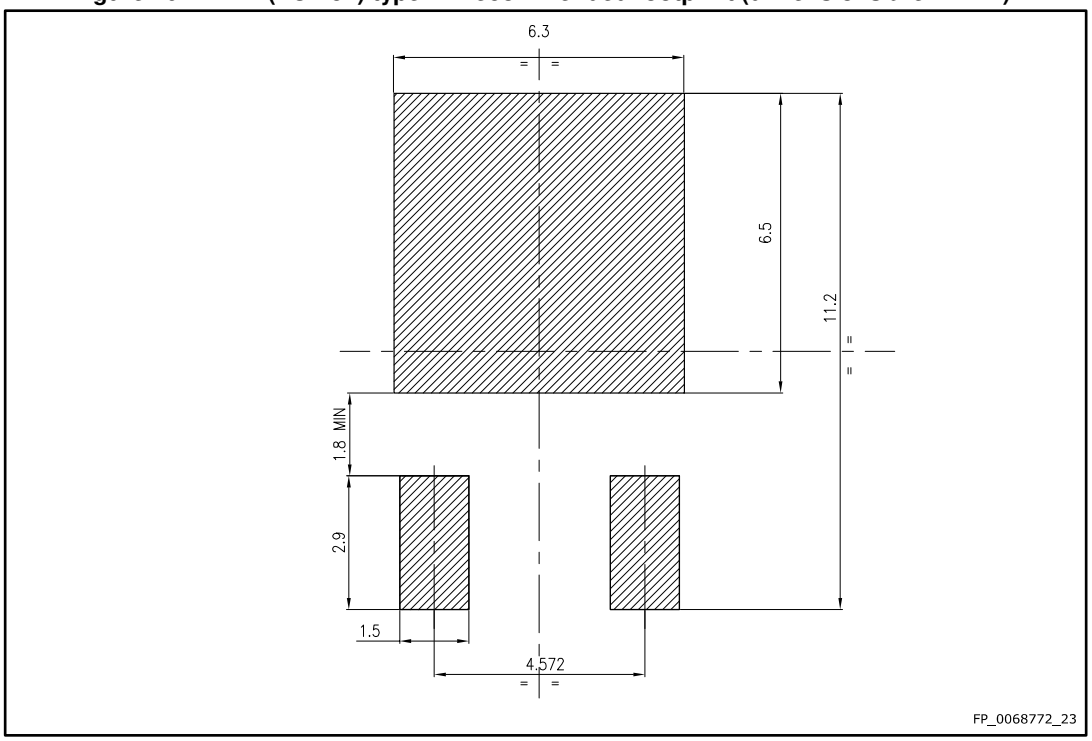

4.2 DPAK (TO-252) tape and reel mechanical data

Figure 21: DPAK (TO-252) tape outline

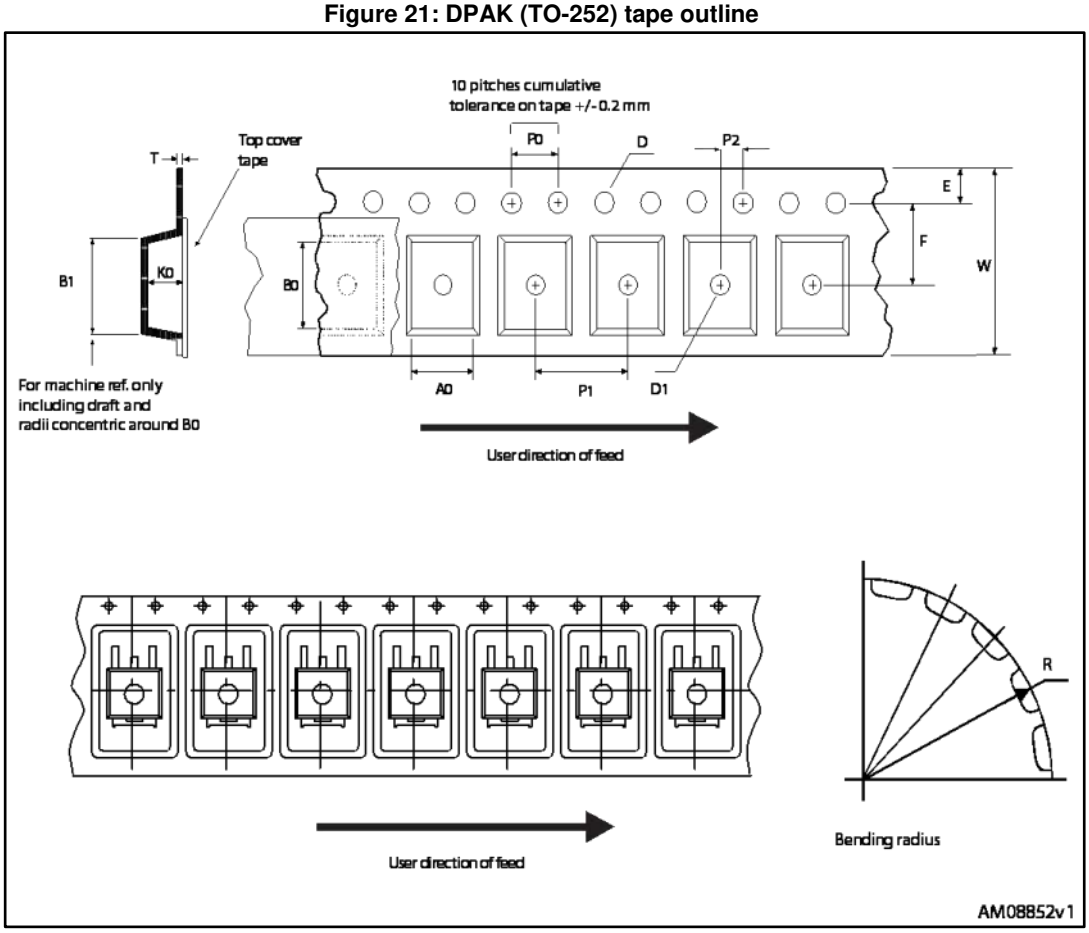

Figure 22: DPAK (TO-252) reel outline

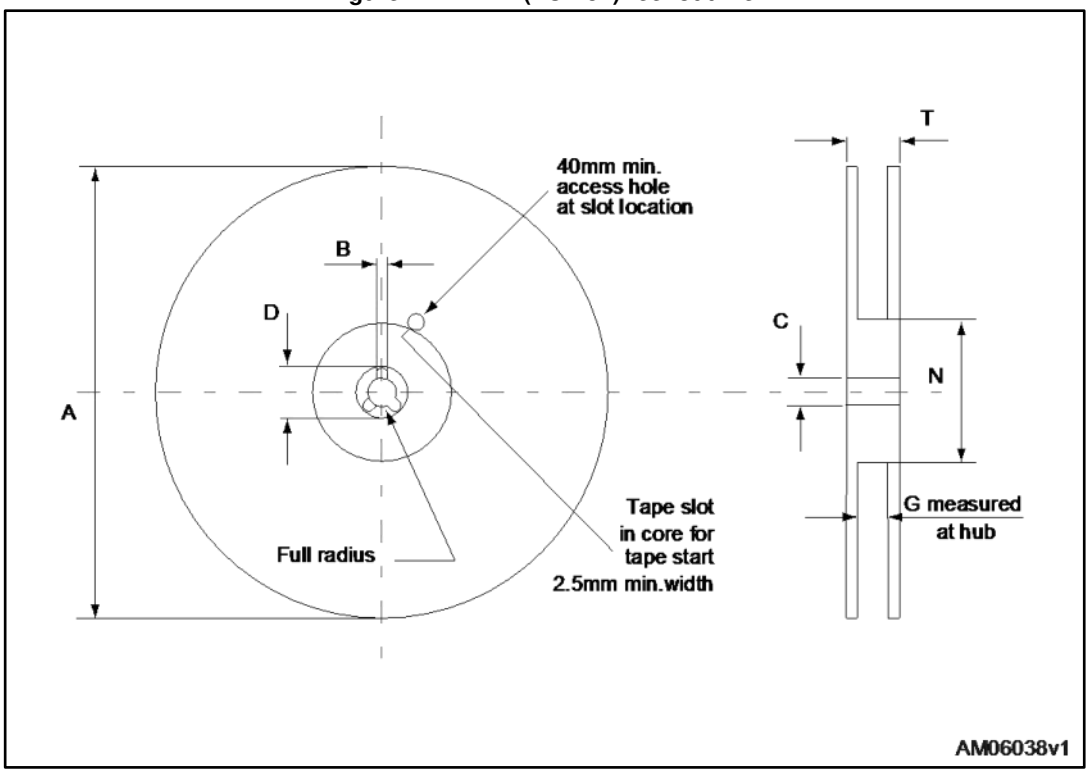

Table 9: DPAK (TO-252) tape and reel mechanical data

Tape			Reel		
Dim.	mm		Dim.	mm	
	Min.	Max.		Min.	Max.
A0	6.8	7	A		330
B0	10.4	10.6	B	1.5	
B1		12.1	C	12.8	13.2
D	1.5	1.6	D	20.2	
D1	1.5		G	16.4	18.4
E	1.65	1.85	N	50	
F	7.4	7.6	T		22.4
K0	2.55	2.75			
P0	3.9	4.1	Base qty.		2500
P1	7.9	8.1	Bulk qty.		2500
P2	1.9	2.1			
R	40				
T	0.25	0.35			
W	15.7	16.3			

5 Revision history

Table 10: Document revision history

Date	Revision	Changes
08-Aug-2012	1	Initial release.
17-Jan-2014	2	– Document status promoted from preliminary to production data – Modified: title – Modified: Features – Added: note 1 in cover page – Modified: RDS(on)max and ID values in cover page – Modified: Derating factor value in Table 2 – Modified: RDS(on) values in Table 4 – Modified: ID and the entire typical values in Table 5, 6 and 7 – Added: Section 2.1: Electrical characteristics (curves) – Updated: Section 3: Package mechanical data – Minor text changes
23-May-2017	3	Modified title and features on cover page. Modified *Table 3: "Thermal data"*. Modified *Section 4: "Package mechanical data"*. Minor text changes.

IMPORTANT NOTICE – PLEASE READ CAREFULLY

STMicroelectronics NV and its subsidiaries (“ST”) reserve the right to make changes, corrections, enhancements, modifications, and improvements to ST products and/or to this document at any time without notice. Purchasers should obtain the latest relevant information on ST products before placing orders. ST products are sold pursuant to ST’s terms and conditions of sale in place at the time of order acknowledgement.

Purchasers are solely responsible for the choice, selection, and use of ST products and ST assumes no liability for application assistance or the design of Purchasers’ products.

No license, express or implied, to any intellectual property right is granted by ST herein.

Resale of ST products with provisions different from the information set forth herein shall void any warranty granted by ST for such product.

ST and the ST logo are trademarks of ST. All other product or service names are the property of their respective owners.

Information in this document supersedes and replaces information previously supplied in any prior versions of this document.

© 2017 STMicroelectronics – All rights reserved