STL8N10LF3

Automotive-grade N-channel 100 V, 25 mΩ typ., 7.8 A STripFET™ F3 Power MOSFET in a PowerFLAT™ 5x6 package

Datasheet - production data



Figure 1: Internal schematic diagram

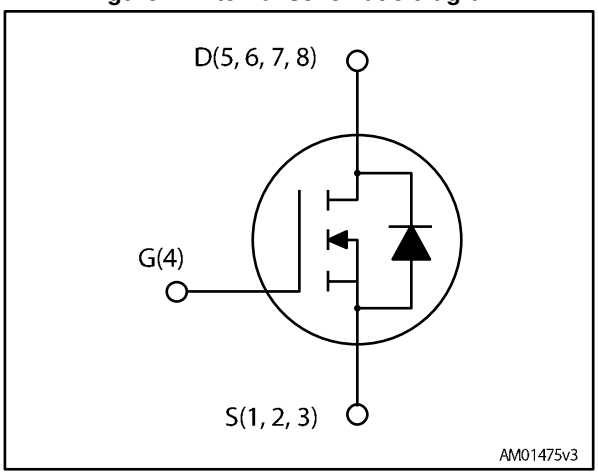

Features

Order code	V_{DS}	$R_{DS(on)}$ max.	I_D
STL8N10LF3	100 V	35 mΩ	7.8 A

- AEC-Q101 qualified
- Logic level $V_{GS(th)}$
- 175 °C maximum junction temperature
- 100% avalanche rated
- Wettable flank package

Applications

- Switching applications

Description

This device is an N-channel Power MOSFET developed using STripFET™ F3 technology. It is designed to minimize on-resistance and gate charge to provide superior switching performance.

Table 1: Device summary

Order code	Marking	Package	Packing
STL8N10LF3	8N10LF3	PowerFLAT™ 5x6	Tape and reel

This is information on a product in full production. www.st.com

Contents

1 Electrical ratings 3
2 Electrical characteristics 4
2.1 Electrical characteristics (curves) 6
3 Test circuits 8
4 Package information 9
4.1 PowerFLAT 5x6 type R package information 9
4.2 Packing information 12
5 Revision history 14

1 Electrical ratings

Table 2: Absolute maximum ratings

Symbol	Parameter	Value	Unit
V_{DS}	Drain-source voltage	100	V
V_{GS}	Gate-source voltage	±20	V
I_D (1)	Drain current (continuous) at T_C = 25 °C	20	A
I_D (1)	Drain current (continuous) at T_c = 100 °C	20	A
I_D (2)	Drain current (continuous) at T_{pcb} = 25 °C	7.8	A
I_D (2)	Drain current (continuous) at T_{pcb} = 100 °C	5.5	A
I_{DM} (2)(3)	Drain current (pulsed)	31.2	A
P_{TOT} (1)	Total dissipation at T_C = 25 °C	70	W
P_{TOT} (2)	Total dissipation at T_{pcb} = 25°C	4.3	W
I_{AV}	Not-repetitive avalanche current	7.8	A
E_{AS} (4)	Single pulse avalanche energy	190	mJ
T_j	Operating junction temperature range	-55 to 175	°C
T_{stg}	Storage temperature range		

Notes:

(1) This value is rated according to $R_{thj\text{-}case}$ and limited by package

(2) This value is rated according to $R_{thj\text{-}pcb}$

(3) Pulse width limited by safe operating area.

(4) Starting T_J= 25 °C, I_D= 7.8 A, V_{DD}= 25 V.

Table 3: Thermal resitance

Symbol	Parameter	Value	Unit
$R_{thj\text{-}case}$	Thermal resistance junction-case	2.1	°C/W
$R_{thj\text{-}pcb}$ (1)	Thermal resistance junction-pcb	35	°C/W

Notes:

(1)When mounted on FR-4 board of 1 inch², 2oz Cu, t < 10 s

2 Electrical characteristics

(T_C = 25 °C unless otherwise specified)

Table 4: On/Off states

Symbol	Parameter	Test conditions	Min.	Typ.	Max.	Unit
$V_{(BR)DSS}$	Drain-source breakdown voltage	V_{GS} = 0 V, I_D = 250 µA	100			V
I_{DSS}	Zero gate voltage drain current	V_{GS} = 0 V, V_{DS} = 100 V			1	µA
I_{GSS}	Gate-body leakage current	V_{DS} = 0 V, V_{GS} = ±20 V			±100	nA
$V_{GS(th)}$	Gate threshold voltage	V_{DS} = V_{GS} , I_D = 250 µA	1		3	V
$R_{DS(on)}$	Static drain-source on-resistance	V_{GS} = 10 V, I_D = 4 A		25	35	mΩ
		V_{GS} = 5 V, I_D = 4 A		40	50	mΩ

Table 5: Dynamic

Symbol	Parameter	Test conditions	Min.	Typ.	Max.	Unit
C_{iss}	Input capacitance	V_{DS} = 25 V, f = 1 MHz, V_{GS} = 0 V	-	970	-	pF
C_{oss}	Output capacitance		-	115	-	
C_{rss}	Reverse transfer capacitance		-	11.5	-	
Q_g	Total gate charge	V_{DD} = 50 V, I_D = 7.8 A, V_{GS} = 10 V (see *Figure 13: "Test circuit for gate charge behavior"*)	-	20.5	-	nC
Q_{gs}	Gate-source charge		-	4	-	
Q_{gd}	Gate-drain charge		-	5	-	
R_G	Intrinsic gate resistance	f =1 MHz open drain	-	3.65	-	Ω

Table 6: Switching times

Symbol	Parameter	Test conditions	Min.	Typ.	Max.	Unit
$t_{d(on)}$	Turn-on delay time	V_{DD} = 50 V, I_D = 7.8 A, R_G = 4.7 Ω, V_{GS} = 10 V (see *Figure 12: "Test circuit for resistive load switching times"*)	-	8.7	-	ns
t_r	Rise time		-	9.6	-	
$t_{d(off)}$	Turn-off delay time		-	50.6	-	
t_f	Fall time		-	5.2	-	

Table 7: Source-drain diode

Symbol	Parameter	Test conditions	Min.	Typ.	Max.	Unit
I_{SD}	Source-drain current		-		7.8	A
I_{SDM}(1)	Source-drain current (pulsed)		-		31.2	A
V_{SD}(2)	Forward on voltage	I_{DS} = 7.8 A, V_{GS} = 0			1.3	V
t_{rr}	Reverse recovery time	I_{SD} = 7.8 A, di/dt = 100 A/µs V_{DD} = 48 V, T_j = 150 °C (see *Figure 14: "Test circuit for inductive load switching and diode recovery times"*)	-	42.5		ns
Q_{rr}	Reverse recovery charge		-	87		nC
I_{RRM}	Reverse recovery current		-	4.08		A

Notes:

(1)Pulse width limited by safe operating area

(2)Pulsed: pulse duration = 300 µs, duty cycle 1.5 %

2.1 Electrical characteristics (curves)

Figure 2: Safe operating area

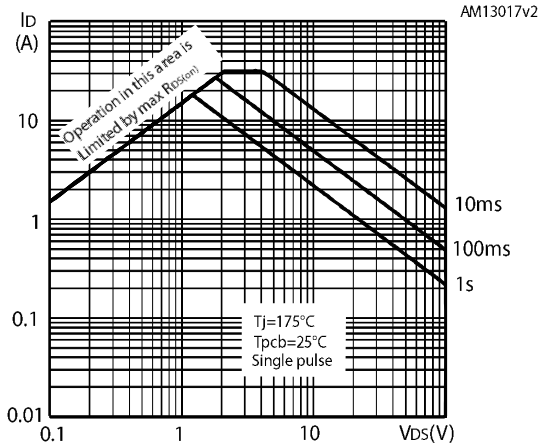

Figure 3: Thermal impedance

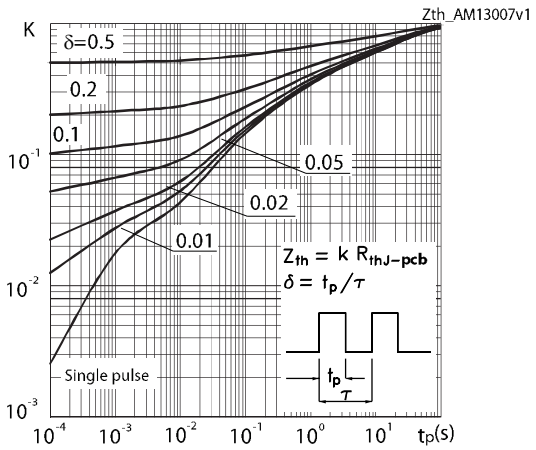

Figure 4: Output characteristics

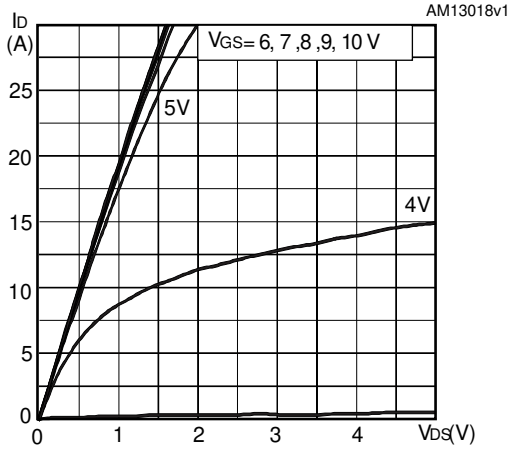

Figure 5: Transfer characteristics

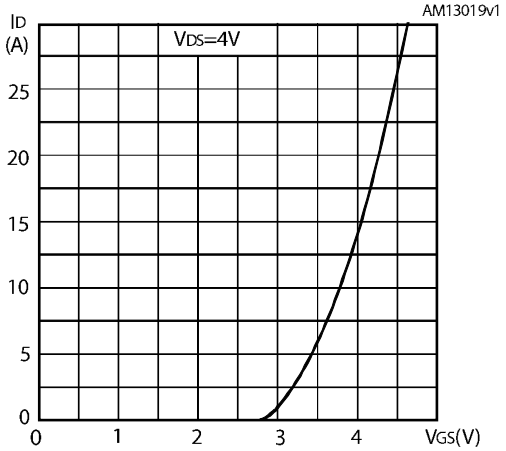

Figure 6: Normalized V(BR)DSS vs temperature

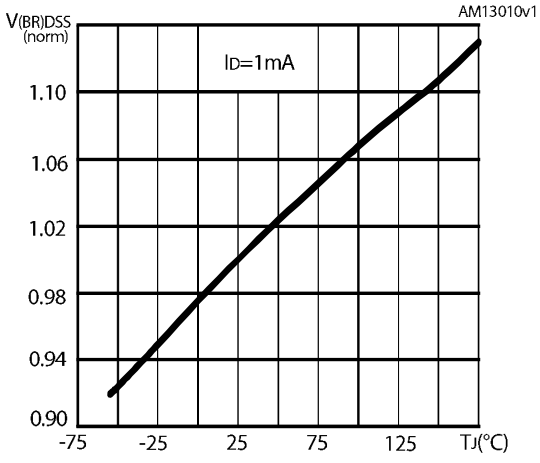

Figure 7: Static drain-source on-resistance

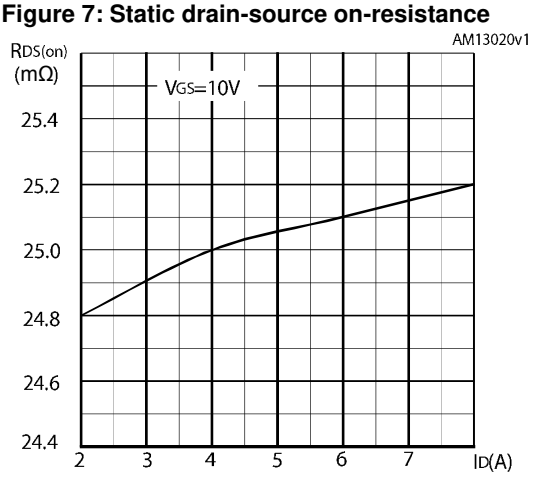

Figure 8: Gate charge vs gate-source voltage

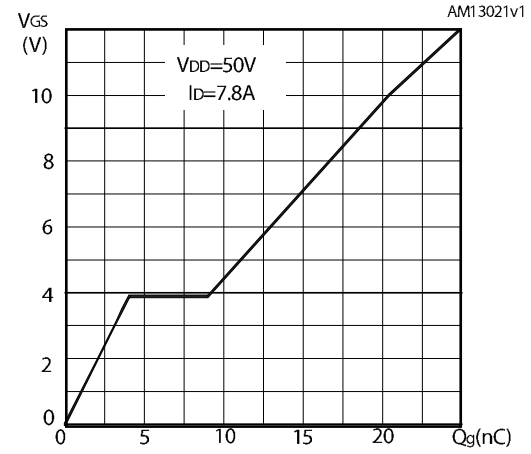

Figure 9: capacitance variation

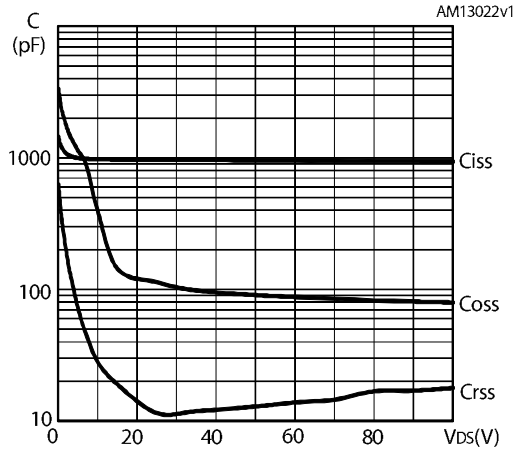

Figure 10: Normalized gate threshold voltage vs temperature

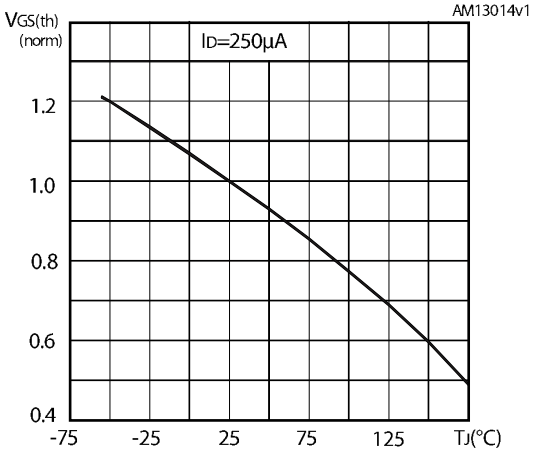

Figure 11: Normalized on resistance vs temperature

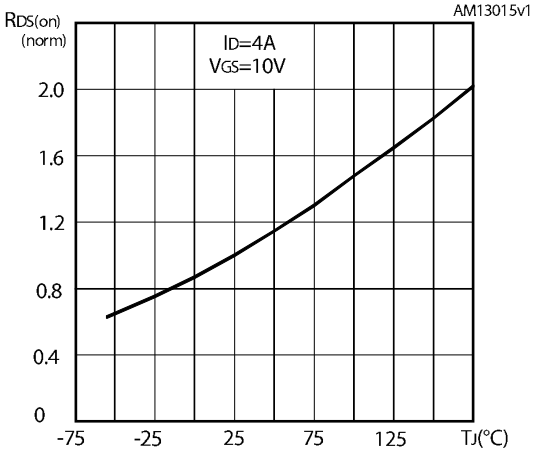

3 Test circuits

Figure 12: Test circuit for resistive load switching times

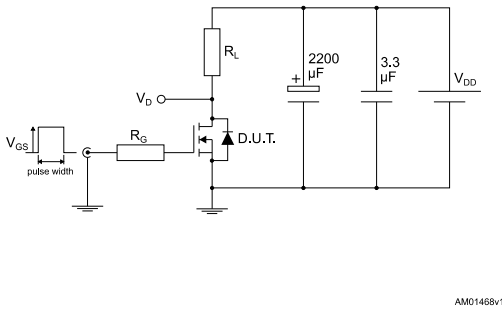

Figure 13: Test circuit for gate charge behavior

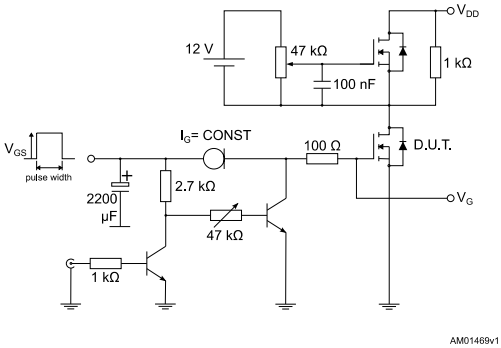

Figure 14: Test circuit for inductive load switching and diode recovery times

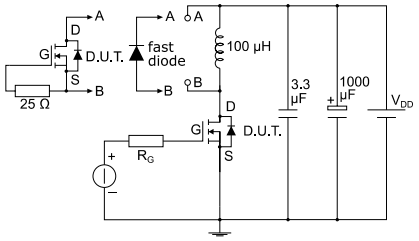

Figure 15: Unclamped inductive load test circuit

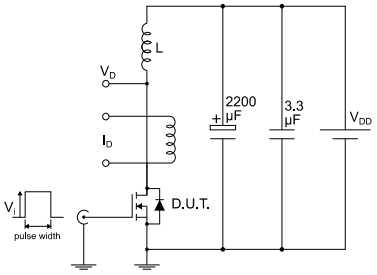

Figure 16: Unclamped inductive waveform

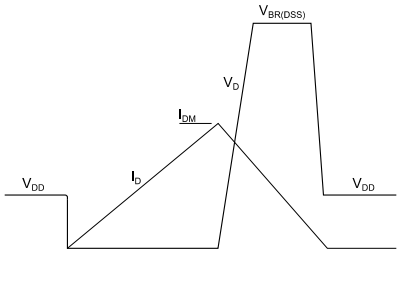

Figure 17: Switching time waveform

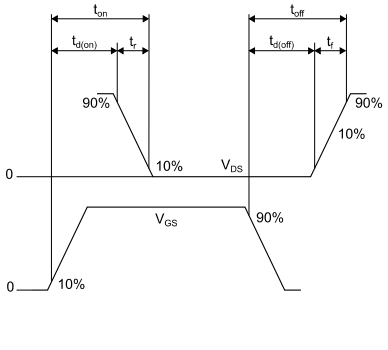

4 Package information

In order to meet environmental requirements, ST offers these devices in different grades of ECOPACK® packages, depending on their level of environmental compliance. ECOPACK® specifications, grade definitions and product status are available at: ***www.st.com***. ECOPACK® is an ST trademark.

4.1 PowerFLAT 5x6 type R package information

Figure 18: PowerFLAT™ 5x6 WF type R package outline

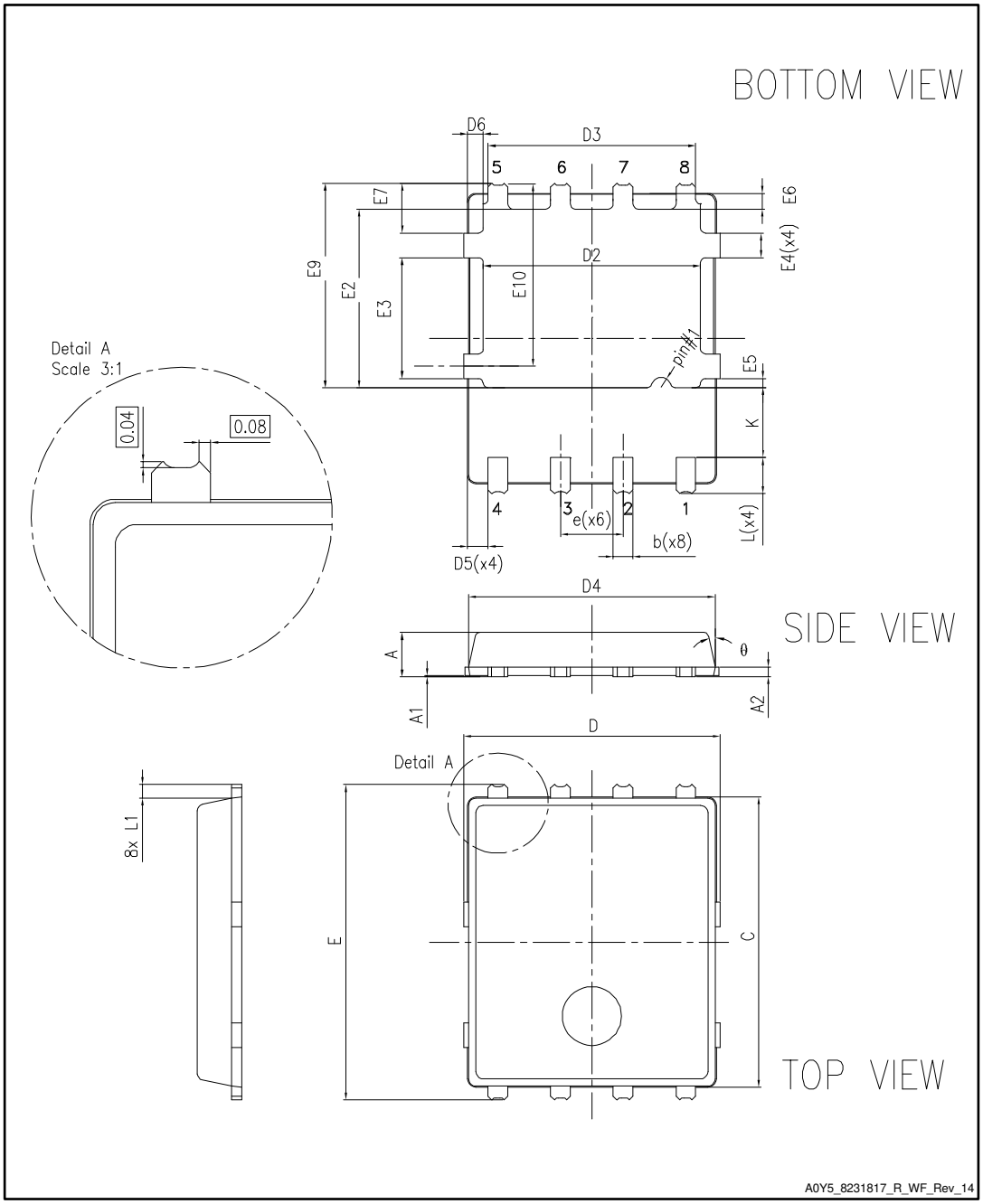

Table 8: PowerFLAT™ 5x6 WF type R mechanical data

Dim.	mm		
	Min.	Typ.	Max.
A	0.80		1.00
A1	0.02		0.05
A2		0.25	
b	0.30		0.50
C	5.80	6.00	6.10
D	5.00	5.20	5.40
D2	4.15		4.45
D3	4.05	4.20	4.35
D4	4.80	5.00	5.10
D5	0.25	0.4	0.55
D6	0.15	0.3	0.45
e		1.27	
E	6.20	6.40	6.60
E2	3.50		3.70
E3	2.35		2.55
E4	0.40		0.60
E5	0.08		0.28
E6	0.20	0.325	0.45
E7	0.85	1.00	1.15
E9	4.00	4.20	4.40
E10	3.55	3.70	3.85
K	1.275		1.575
L	0.725	0.825	0.925
L1	0.175	0.275	0.375
Θ	0°		12°

Figure 19: PowerFLAT™ 5x6 recommended footprint (dimensions are in mm)

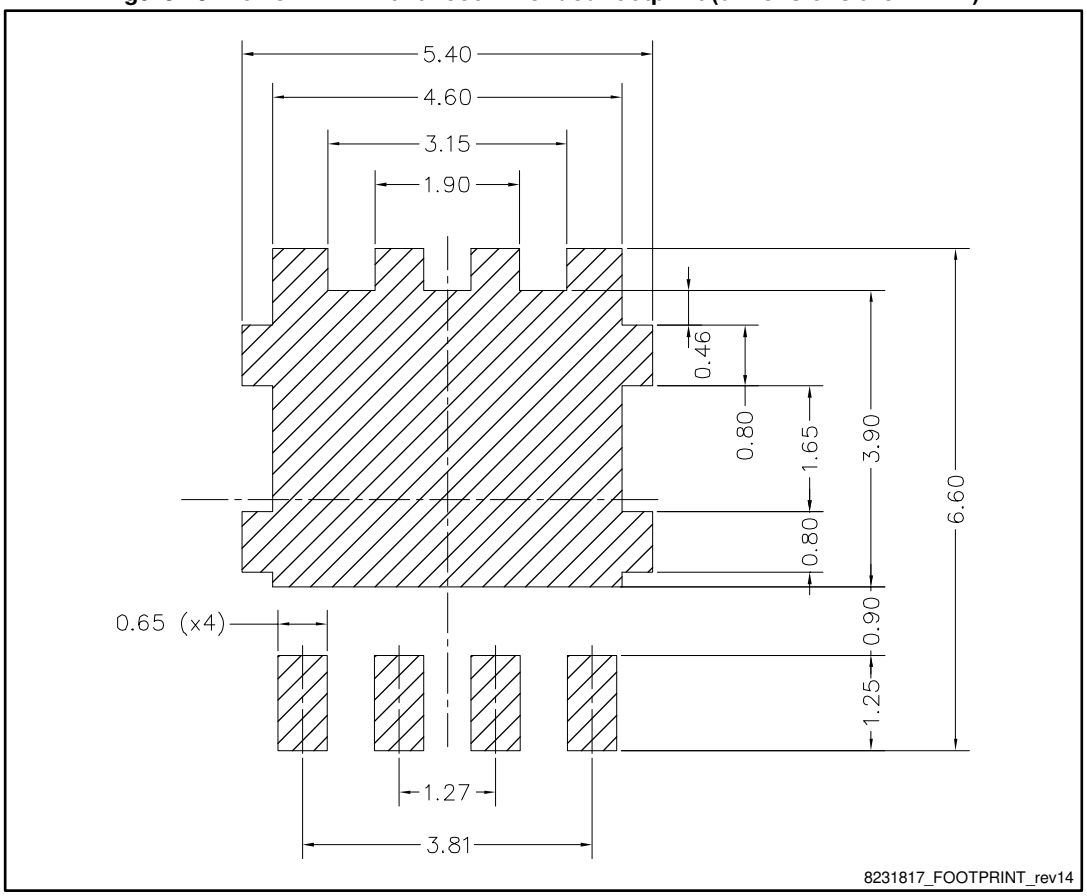

4.2 Packing information

Figure 20: PowerFLAT™ 5x6 WF tape (dimensions are in mm)

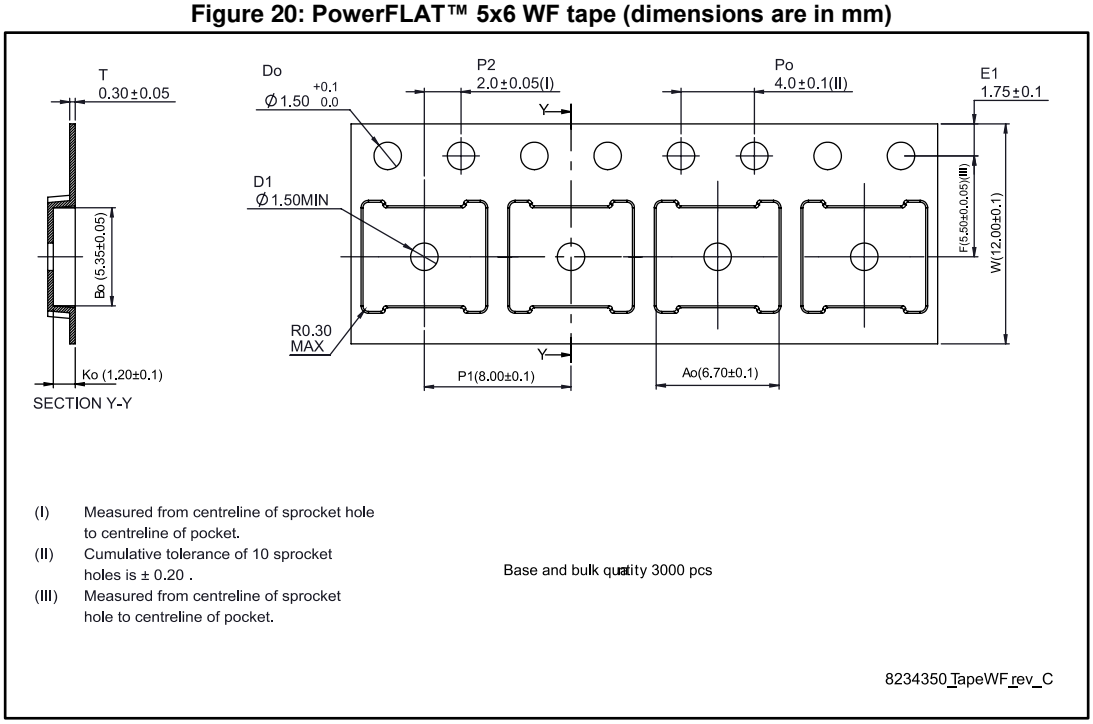

Figure 21: PowerFLAT™ 5x6 package orientation in carrier tape

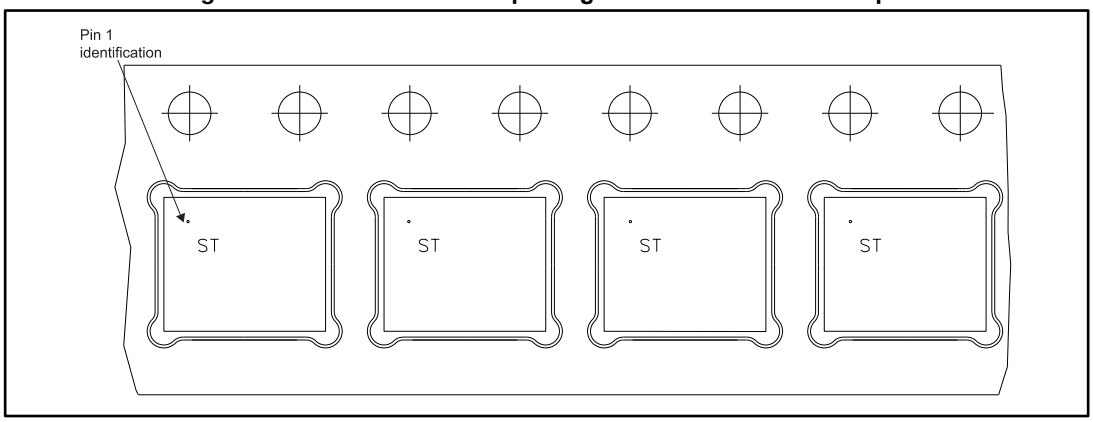

Figure 22: PowerFLAT™ 5x6 reel (dimensions are in mm)

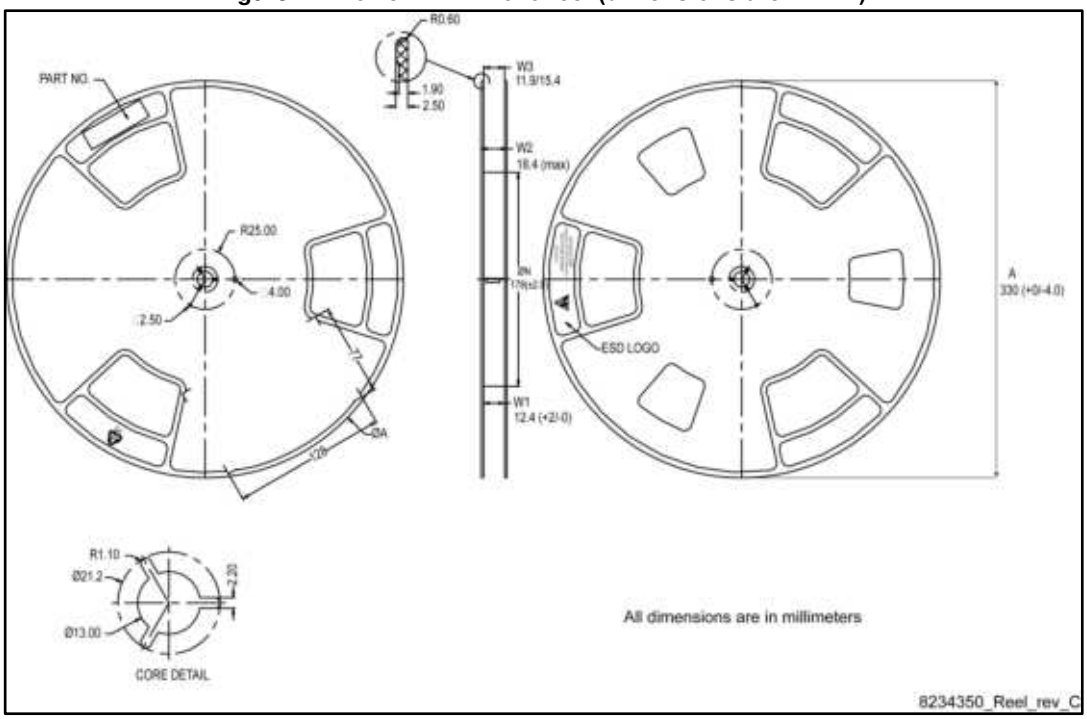

5 Revision history

Table 9: Document revision history

Date	Revision	Changes
17-Jan-2013	1	First release.
18-May-2015	2	Updated Section 4: Package information. Added Section 5: Packing information. Minor text changes.
09-Nov-2016	3	Updated features in cover page and *Table 2: Absolute maximum ratings*. Updated *Section 4: Package information* Minor text changes
28-Nov-2016	4	Updated test conditions in *Table 4: "On/Off states"*.

IMPORTANT NOTICE – PLEASE READ CAREFULLY

STMicroelectronics NV and its subsidiaries (“ST”) reserve the right to make changes, corrections, enhancements, modifications, and improvements to ST products and/or to this document at any time without notice. Purchasers should obtain the latest relevant information on ST products before placing orders. ST products are sold pursuant to ST’s terms and conditions of sale in place at the time of order acknowledgement.

Purchasers are solely responsible for the choice, selection, and use of ST products and ST assumes no liability for application assistance or the design of Purchasers’ products.

No license, express or implied, to any intellectual property right is granted by ST herein.

Resale of ST products with provisions different from the information set forth herein shall void any warranty granted by ST for such product.

ST and the ST logo are trademarks of ST. All other product or service names are the property of their respective owners.

Information in this document supersedes and replaces information previously supplied in any prior versions of this document.

© 2016 STMicroelectronics – All rights reserved