STAP16DPPS05

Automotive-grade low voltage 16-bit constant current LED sink driver with output error detection and auto power-saving

Datasheet - production data



TSSO24
(exposed pad)

Features



- AECQ100 qualified
- Low voltage power supply down to 3 V
- 16 constant current output channels
- Adjustable output current through external resistor
- Short and open output error detection
- Serial data IN/parallel data OUT
- 3.3 V micro driver-able
- Auto power-saving
- Output current: 3 - 40 mA
- Auto power-saving
- Max. clock frequency: 30 MHz
- 20 V current generator rated voltage
- Power supply voltage: from 3 V to 5.5 V
- Thermal shutdown for overtemperature protection
- ESD protection 2.0 KV HBM

Applications

- Dashboard and infotainment backlighting
- Exterior/interior lighting
- DTRLs

Description

The STAP16DPPS05 is a monolithic, low voltage, low current power 16-bit shift register designed for LED panel displays. The device contains a 16-bit serial-in, parallel-out shift register that feeds a 16-bit D-type storage register. In the output stage, sixteen regulated current sources are designed to provide 3 to 40 mA of constant current to drive the LEDs.

The STAP16DPPS05 features the open and short LED detection on the outputs. The detection circuit checks 3 different conditions which may occur on the output line: short to GND, short to V_O or open line. The data detection results are loaded in the shift register and shifted out via the serial line output. The detection functionality is implemented without increasing the pin number through a secondary function of the output enable and latch pin (DM1 and DM2 respectively). A dedicated logic sequence allows the device to enter or leave detection mode. Through an external resistor, users can adjust the output current of the STP16DPPS05 thus controlling the light intensity of the LEDs. In addition, the user can adjust the intensity of the brightness of the LED's from 0 % to 100 % through the $\overline{\text{OE/DM2}}$ pin. The auto power shutdown and auto power-ON feature allows the device to save power with no external intervention. The STAP16DPPS05 guarantees a 20 V output driving capability, allowing users to connect more LEDs in series. The high clock frequency, 30 MHz also satisfies the system requirement of high volume data transmission. The 3.3 V of voltage supply is very useful for applications interfacing any microcontroller from 3.3 V micro. Compared with a standard TSSOP package, the TSSOP exposed pad increases the capability of heat dissipation by a factor of 2.5.

Table 1: Device summary

Order code	Package	Packing
STAP16DPPS05XTTR	TSSOP24 (exposed pad)	2500 parts per reel

This is information on a product in full production. www.st.com

Contents

1 Summary description 3
1.1 Pin connections and description 3
2 Electrical ratings 4
2.1 Absolute maximum ratings 4
2.2 Thermal data 4
2.3 Recommended operating conditions 5
3 Electrical characteristics 6
4 Equivalent circuit and outputs 8
5 Timing diagrams 11
6 Typical characteristics 14
7 Error detection mode functionality 18
7.1 Phase one: entering error detection mode 18
7.2 Phase two: error detection 19
7.3 Phase three: resuming normal mode 21
7.4 Error detection conditions 21
7.5 Auto power-saving 23
8 Package information 24
8.1 TSSOP24 exposed pad package information 25
8.2 TSSOP24 packing information 27
9 Revision history 28

1 Summary description

Table 2: Typical current accuracy

Output voltage	Current accuracy		Output current	V_{DD}	Temperature
	Between bits	Between ICs			
≥ 1.3 V	± 1 %	± 2 %	5 to 40 mA	3.3 V to 5 V	25 °C

1.1 Pin connections and description

Figure 1: Pin connection

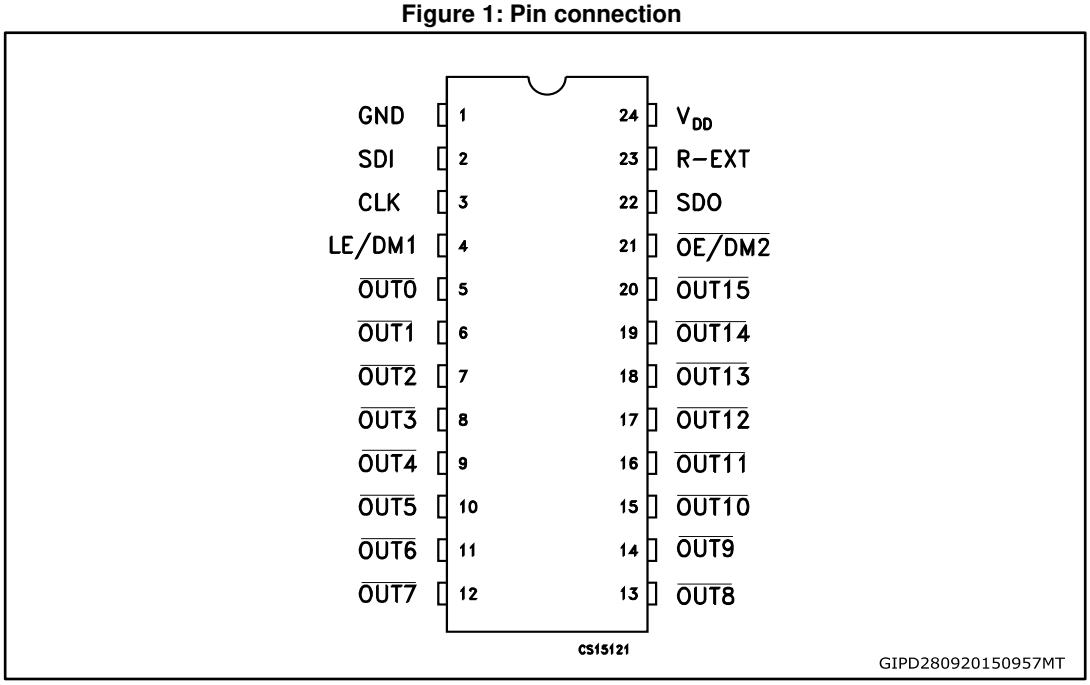

The exposed pad is electrically connected to a metal layer electrically isolated or connected to ground.

Table 3: Pin description

Pin n°	Symbol	Name and function
1	GND	Ground terminal
2	SDI	Serial data input terminal
3	CLK	Clock input terminal
4	LE/DM1	Latch input terminal - detect mode 1 (see operation principle)
5-20	OUT-15	Output terminal
21	$\overline{\text{OE/DM2}}$	Input terminal of output enable (active low) - detect mode 1 (see operation principle)
22	SDO	Serial data out terminal
23	R_{-EXT}	Input terminal for an external resistor for constant current programming
24	V_{DD}	Supply voltage terminal

2 Electrical ratings

2.1 Absolute maximum ratings

Stressing the device above the rating listed in the “absolute maximum ratings” table may cause permanent damage to the device. These are stress ratings only and operation of the device at these or any other conditions above those indicated in the operating sections of this specification is not implied. Exposure to absolute maximum rating conditions for extended periods may affect device reliability.

Table 4: Absolute maximum ratings

Symbol	Parameter	Value	Unit
V_{dd}	Supply voltage	0 to 7	V
V_O	Output voltage	-0.5 to 20	V
I_O	Output current	50	mA
V_I	Input voltage	-0.4 to V_{dd}	V
I_{GND}	GND terminal current	800	mA
f_{CLK}	Clock frequency	50	MHz
T_{OPR}	Operating temperature range	-40 to +150	°C
T_{STG}	Storage temperature range	-55 to +150	°C

2.2 Thermal data

Table 5: Thermal data

Symbol	Parameter		Value	Unit
$R_{thj\text{-}amb}$	Thermal resistance junction-ambient (1)	TSSOP24 (exposed pad) (2)	37.5	°C/W

Notes:

(1)According to JEDEC standard 51-7B.

(2)The exposed pad should be soldered to the PCB in order to derive the thermal benefits.

2.3 Recommended operating conditions

Table 6: Recommended operating conditions

Symbol	Parameter	Test condition	Min.	Typ.	Max.	Unit
V_{DD}	Supply voltage		3.0	-	5.5	V
V_O	Output voltage			-	20	V
I_O	Output current	OUTn	3	-	40	mA
I_{OH}	Output current	SeriaL-OUT		-	+1	mA
I_{OL}	Output current	Serial-OUT		-	-1	mA
V_{IH}	Input voltage		0.7 V_{DD}	-	V_{DD}	V
V_{IL}	Input voltage		-0.3	-	0.3 V_{DD}	V
t_{wLAT}	LE/DM1 pulse width	V_{DD} = 3.0 V to 5.0 V	20	-		ns
t_{wCLK}	CLK pulse width		10	-		ns
t_{wEN}	$\overline{OE/DM2}$ pulse width		100	-		ns
$t_{SETUP(D)}$	Setup time for DATA		8	-		ns
$t_{HOLD(D)}$	Hold time for DATA		5	-		ns
$t_{SETUP(L)}$	Setup time for LATCH		8	-		ns
f_{CLK}	Clock frequency	Cascade operation (1)		-	30	MHz

Notes:

(1)If the device is connected in cascade, it may not be possible to achieve the maximum data transfer. Please consider the timings carefully.

3 Electrical characteristics

V_{DD} = 5 V, T_j = -40 °C to 125 °C, unless otherwise specified.

Table 7: Electrical characteristics

Symbol	Parameter	Test condition	Min.	Typ.	Max.	Unit
V_{IH}	Input voltage high level		0.7·V_{DD}		V_{DD}	V
V_{IL}	Input voltage low level		GND		0.3·V_{DD}	V
V_{OL}	Serial data output voltage (SDO)	I_{OL} = + 1 mA		0.03	0.4	V
V_{OH}		I_{OH} = - 1 mA	V_{DD}-0.4			V
I_{OH}	Output leakage current	Vo =19 V, OUTn = OFF		0.5	2	µA
ΔI_{OL1}	Current accuracy channel-to-channel (1)(2)	V_{DD} = 3.3 V, V_O = 0.3 V, R_{ext} = 3.9 kΩ		±1	±5	%
ΔI_{OL2}		V_{DD} = 3.3 V, V_O = 0.6 V, R_{ext} = 980 Ω		±0.5	±4	%
ΔI_{OL3}		V_{DD} = 3.3 V, V_O = 1.3 V, R_{ext} = 490 Ω		±0.5	±4	%
ΔI_{OL2}	Current accuracy device-to-device(1)	V_{DD} = 3.3 V, V_O = 0.6 V, R_{ext} = 980 Ω			±5	%
ΔI_{OL3}		V_{DD} = 3.3 V, V_O = 1.3 V, R_{ext} = 490 Ω			±6	%
R_{IN}(up)	Pull-up resistor for OE pin		150	300	600	kΩ
R_{IN}(down)	Pull-down resistor for LE pin		100	200	400	kΩ
IDD(AutoOff)	Supply current (OFF)	R_{ext} = 980 Ω, OE = low, OUT0 to OUT7 = OFF		200	300	µA
IDD(OFF1)		R_{ext} = 980 Ω, OE = high, OUT0 to OUT7 = ON		5	7.5	mA
IDD(OFF2)		R_{ext} = 490 Ω, OE = high, OUT0 to OUT15 = ON		8	11	mA
IDD(ON1)	Supply current (ON)	R_{ext} = 980 Ω, OE = low, OUT0 to OUT15 = ON		6	7.5	mA
IDD(ON2)		R_{ext} = 490 Ω, OE = low, OUT0 to OUT15 = ON		8	11	mA
Tsd	Thermal shutdown(3)			170		°C

Notes:

(1)Test performed with all outputs turned on, but only one output loaded at a time.

(2)Δ_{IOL}+ = ((I_{OLmax} - I_{OLmean}) / I_{OLmean}) * 100, Δ_{IOL} - = ((I_{OLmin} - I_{OLmean}) / I_{OLmean})*100, where I_{OLmean} = (I_{OLout1}+I_{OLout2}+…+$I_{OLout16}$) / 16.

(3)Not tested, guaranteed by design.

V_{DD} = 5 V, T_j = 25 °C, unless otherwise specified.

Table 8: Switching characteristics
(all table limits are guaranteed by design. Not tested in production.)

Symbol	Parameter	Test condition		Min.	Typ.	Max.	Unit
f_{clk}	Clock frequency	Cascade operation				30	MHz
t_{PLH1}	CLK- $\overline{OUTn}$, LE/DM1 = H, $\overline{OE/DM2}$ = L	$V_{IH} = V_{DD}$ V_{IL} = GND C_L = 10 pF I_O = 20 mA V_L = 3.0 V R_L = 60 Ω	V_{DD} = 3.3 V		55	90	ns
			V_{DD} = 5 V		30	50	
t_{PLH2}	LE/DM1- $\overline{OUTn}$, $\overline{OE/DM2}$ = L		V_{DD} = 3.3 V		48	80	ns
			V_{DD} = 5 V		30	45	
t_{PLH3}	$\overline{OE/DM2}$ - $\overline{OUTn}$, LE\\DM1 = H		V_{DD} = 3.3 V		70	120	ns
			V_{DD} = 5 V		45	65	
t_{PLH}	CLK-SDO		V_{DD} = 3.3 V		21	35	ns
			V_{DD} = 5 V		15	25	
t_{PHL1}	CLK $\overline{OUTn}$, LE/DM1 = H, $\overline{OE/DM2}$ = L		V_{DD} = 3.3 V		28	35	ns
			V_{DD} = 5 V		22	40	
t_{PHL2}	LE/DM1- $\overline{OUTn}$, $\overline{OE/DM2}$ = L		V_{DD} = 3.3 V		13	35	ns
			V_{DD} = 5 V		12	18	
t_{PHL3}	$\overline{OE}$ /DM2- $\overline{OUTn}$, LE/DM1 = H		V_{DD} = 3.3 V		24	35	ns
			V_{DD} = 5 V		21	30	
t_{PHL}	CLK-SDO		V_{DD} = 3.3 V		24	40	ns
			V_{DD} = 5 V		17	25	
t_{ON}	Output fall time 10~90 % of voltage waveform		V_{DD} = 3.3 V		30	55	ns
			V_{DD} = 5 V		10	20	
t_{OFF}	Output rise time 90~10 % of voltage waveform		V_{DD} = 3.3 V		4	10	ns
			V_{DD} = 5 V		3	8	
t_r	CLK rise time (1)					5	µs
t_f	CLK fall time(1)					5	

Notes:

(1)If devices are connected in cascade and tr or tf is large, it may be critical to achieve the timing required for data transfer between two cascaded devices.

4 Equivalent circuit and outputs

Figure 2: OE/DM2 terminal

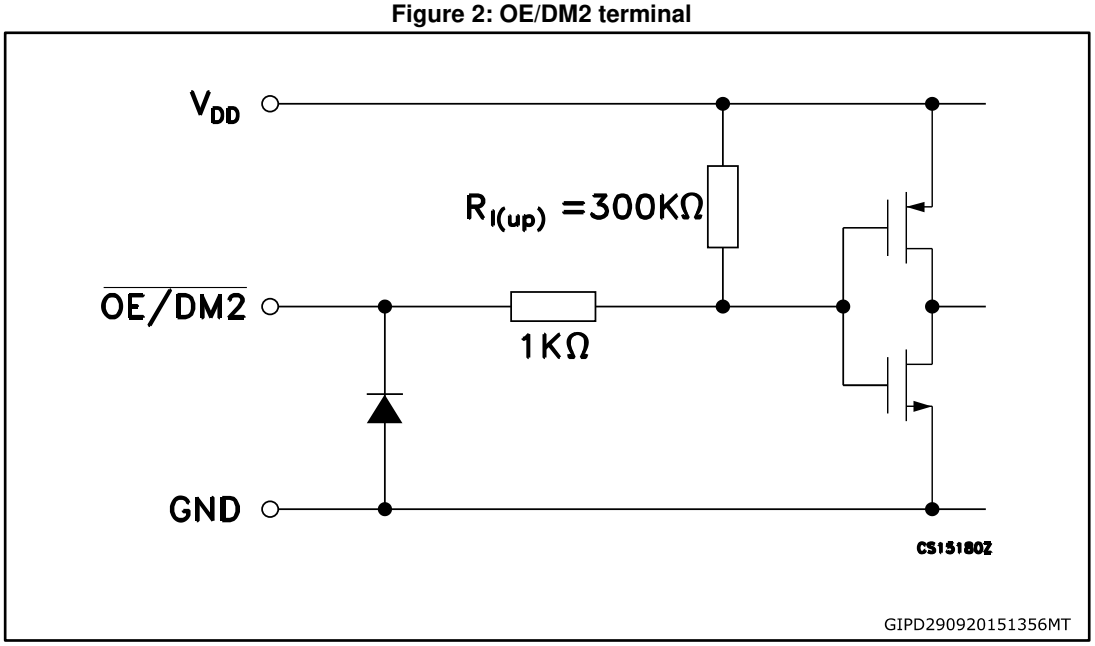

Figure 3: LE/DM1 terminal

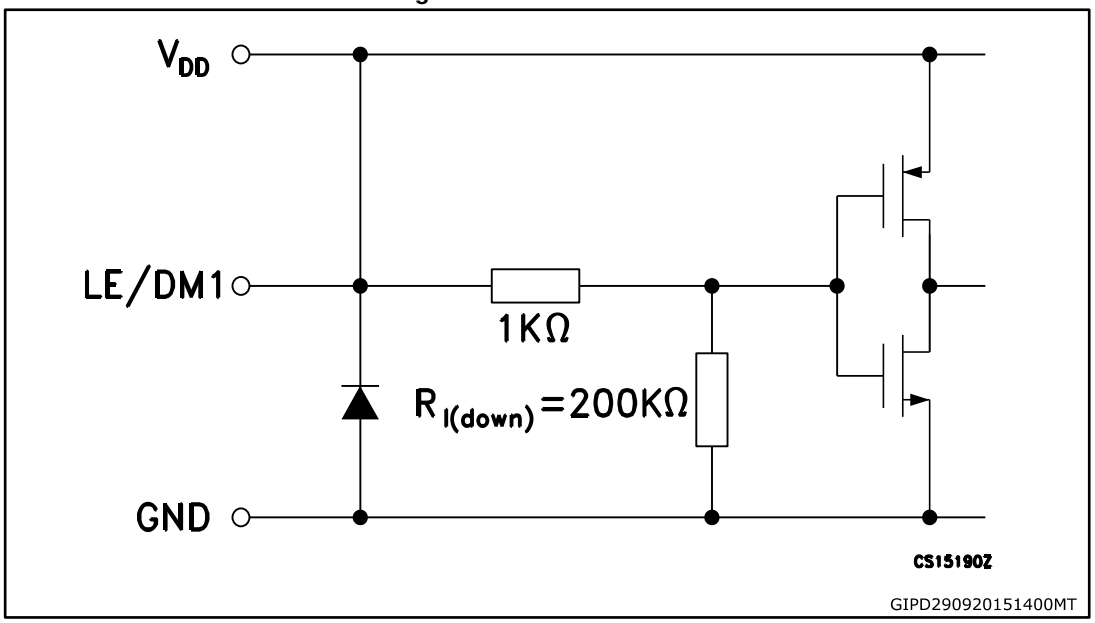

Figure 4: CLK, SDI terminal

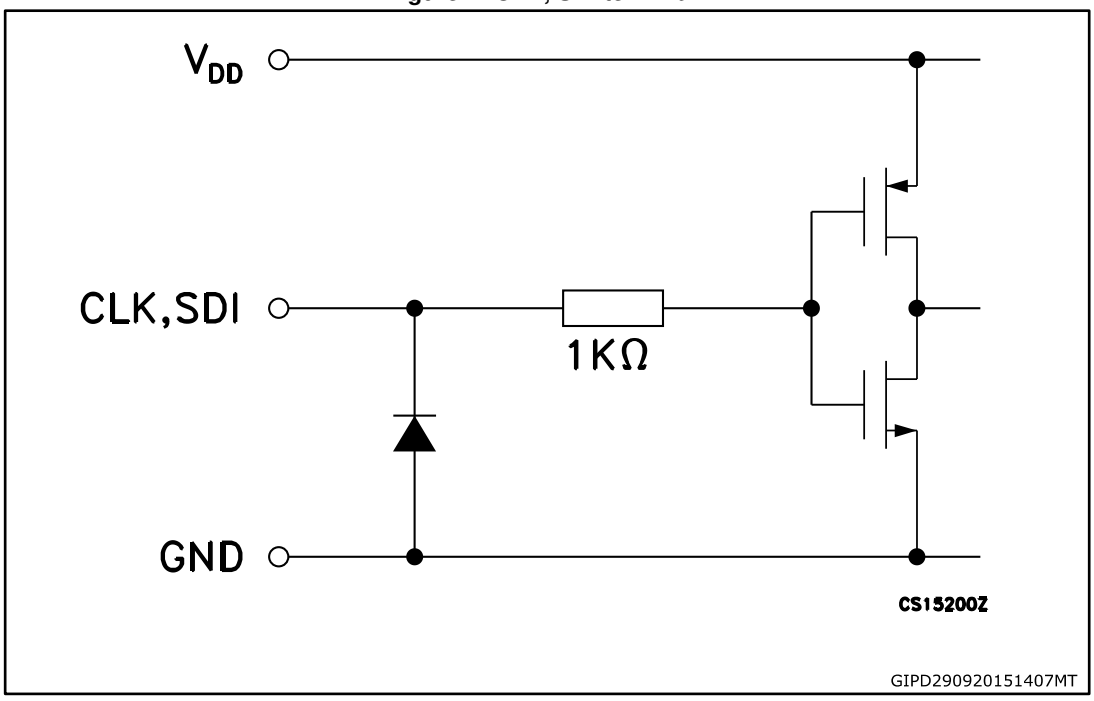

Figure 5: SDO terminal

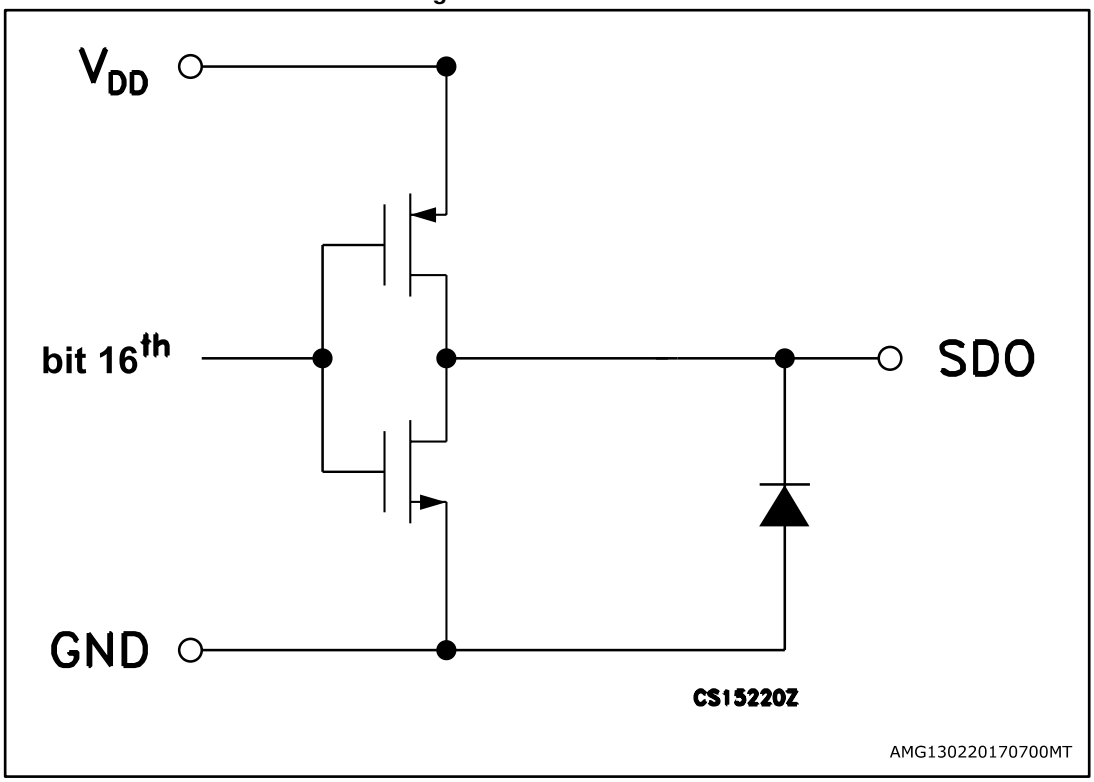

Figure 6: Block diagram

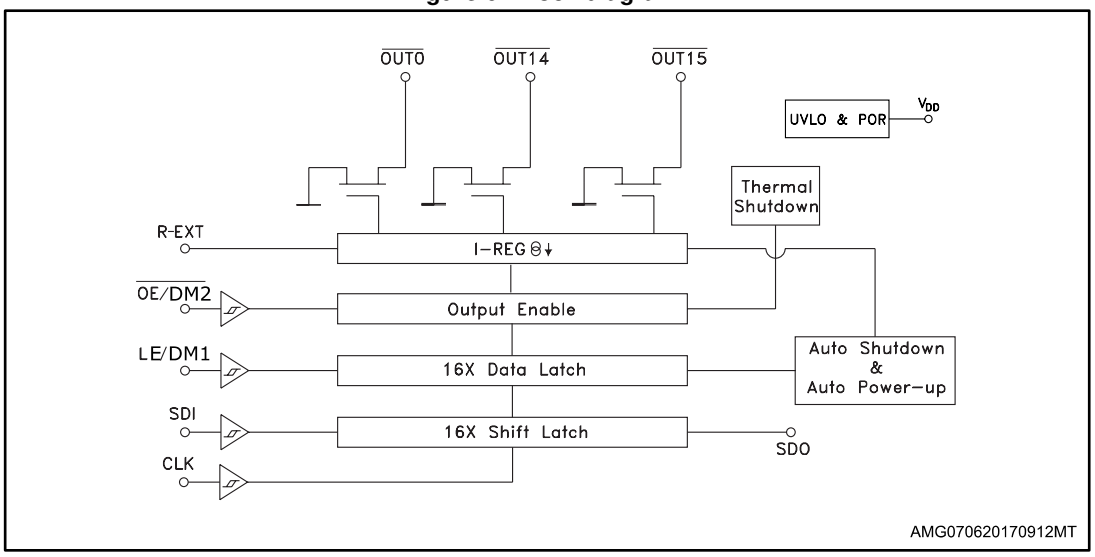

5 Timing diagrams

Table 9: Truth table

Clock	LE/DM1	$\overline{OE/DM2}$	Serial-IN	$\overline{OUT0}$ ..... $\overline{OUT7}$ ..... $\overline{OUT15}$	SDO
_|‾	H	L	Dn	Dn ..... Dn - 7 ..... Dn -15	Dn - 15
_|‾	L	L	Dn + 1	No change	Dn - 14
_|‾	H	L	Dn + 2	Dn + 2 ..... Dn - 5 ..... Dn -13	Dn - 13
‾|_	X	L	Dn + 3	Dn + 2 ..... Dn - 5 ..... Dn -13	Dn - 13
‾|_	X	H	Dn + 3	OFF	Dn - 13

OUTn = ON when Dn = H OUTn = OFF when Dn = L.

Figure 7: Timing diagram

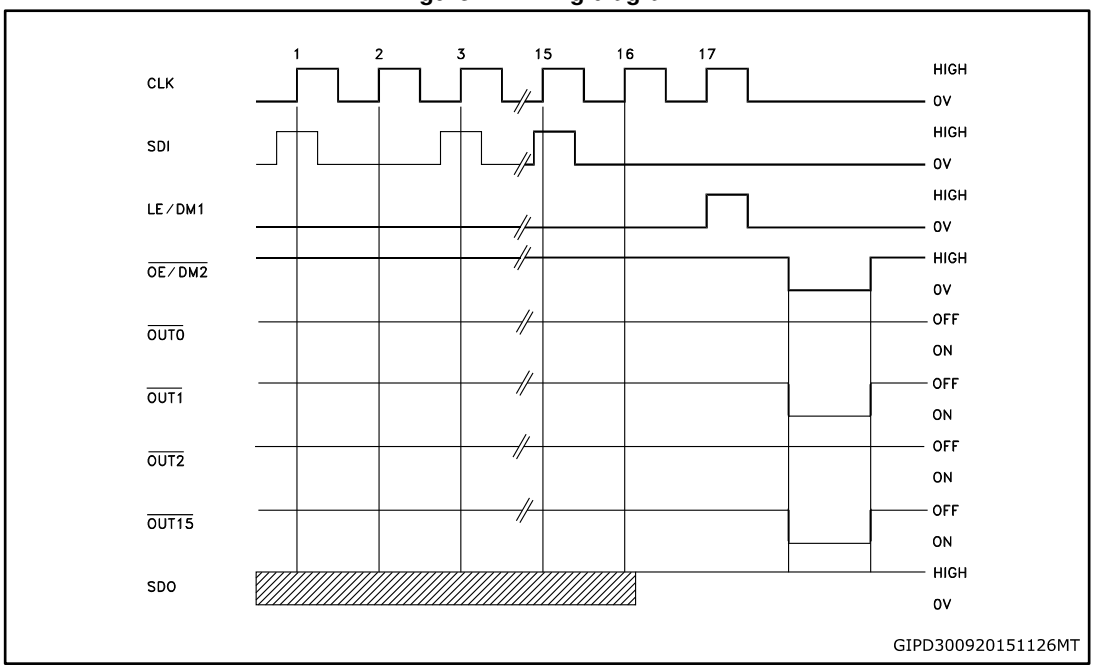

Latch and output enable terminals are level-sensitive and are not synchronized with rising or falling edge of LE/DM1 signal. When LE/DM1 terminal is low level, the latch circuit holds previous set of data. When LE/DM1 terminal is high level, the latch circuit refreshes new set of data from SDI chain. When $\overline{OE/DM2}$ terminal is at low level, the output terminals Out 0 to Out 15 respond to data in the latch circuits, either '1' ON or '0' OFF. When $\overline{OE/DM2}$ terminal is at high level, all output terminals are switched OFF.

Table 10: Enable IO: shutdown truth table

Clock	LE/DM1	SDI_0..... SDI_7..... SDI_{15}	SH	Auto power-up	$\overline{OUTn}$
_|¯	H	All = L	Active	Not active(1)	OFF
_|¯	L	No change	No change	No change	No change
_|¯	H	One or more = H	Not active	Active	X(2)

Notes:

(1)At power-up, the device starts in shutdown mode.

(2)Undefined.

Figure 8: Clock, serial-in, serial-out

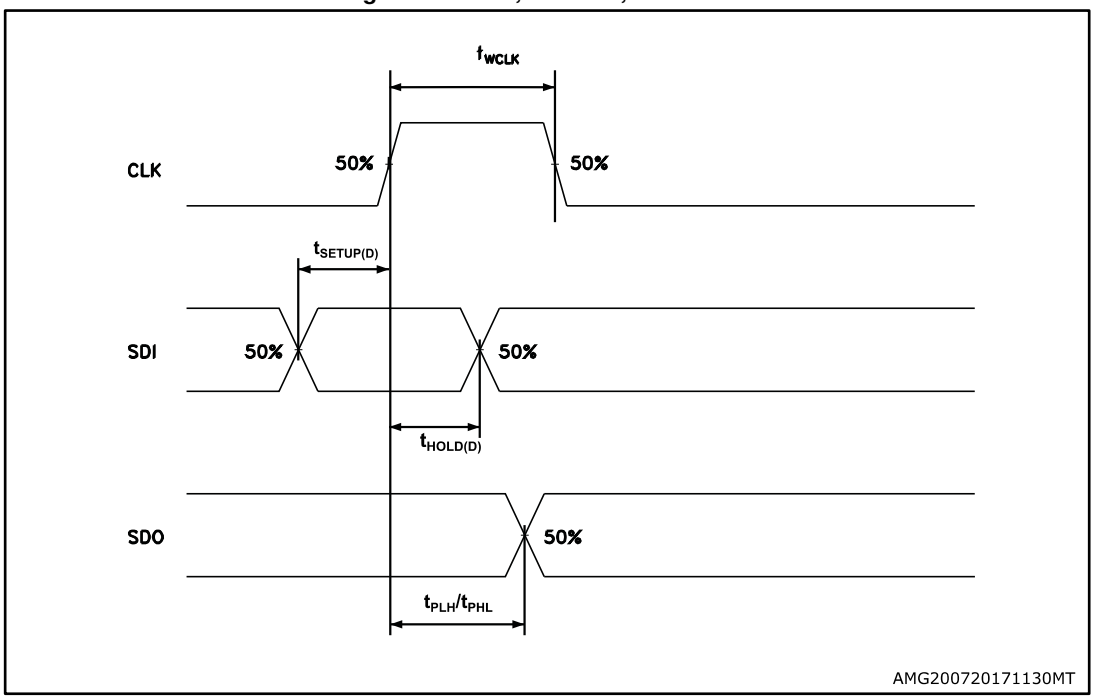

Figure 9: Clock, serial-in, latch, enable, outputs

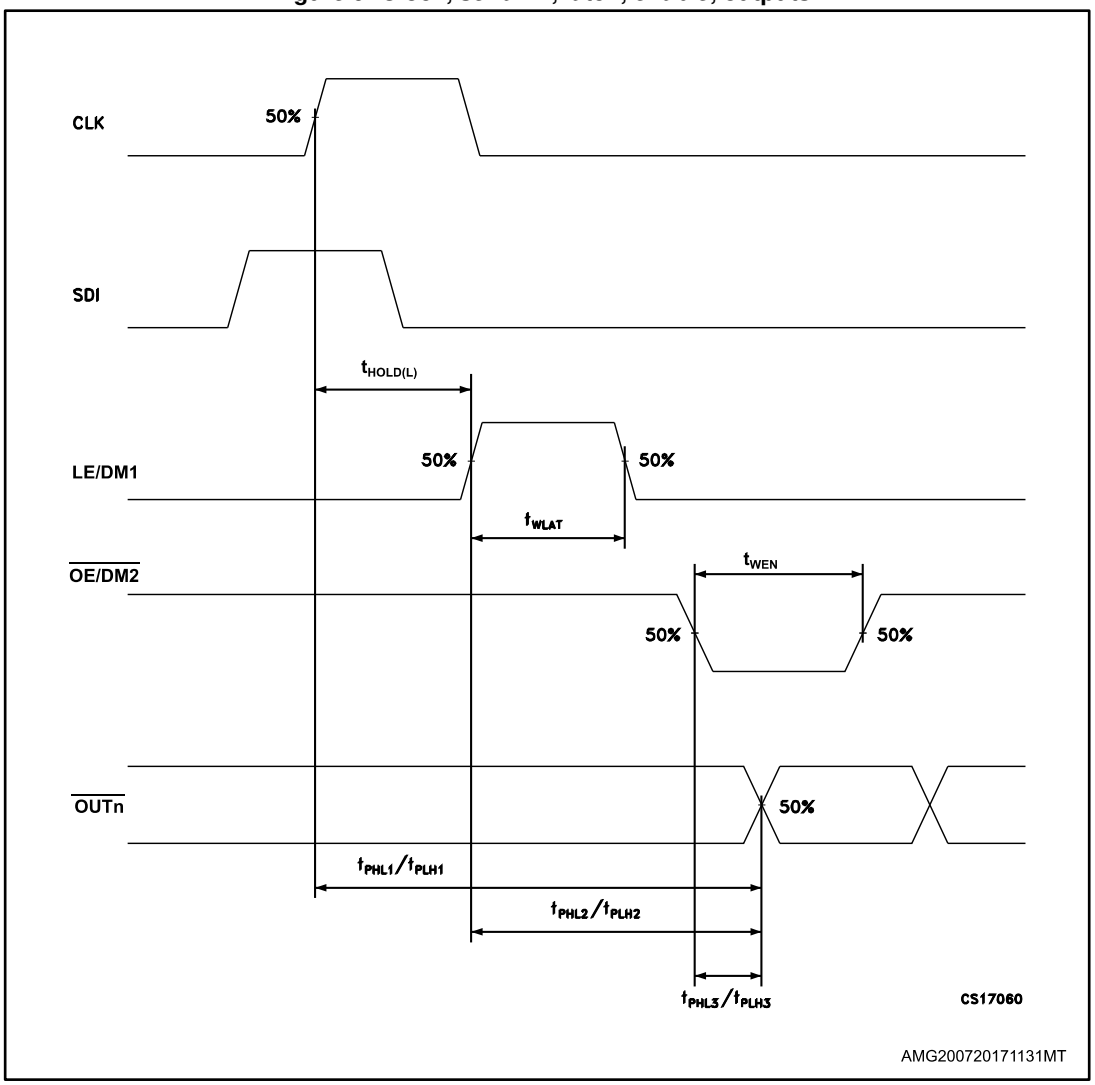

Figure 10: Outputs

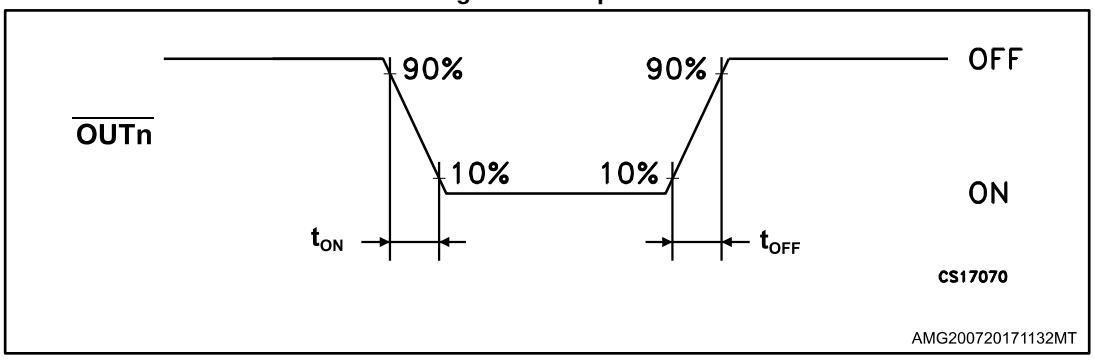

6 Typical characteristics

Figure 11: Output current vs R_{EXT} resistor

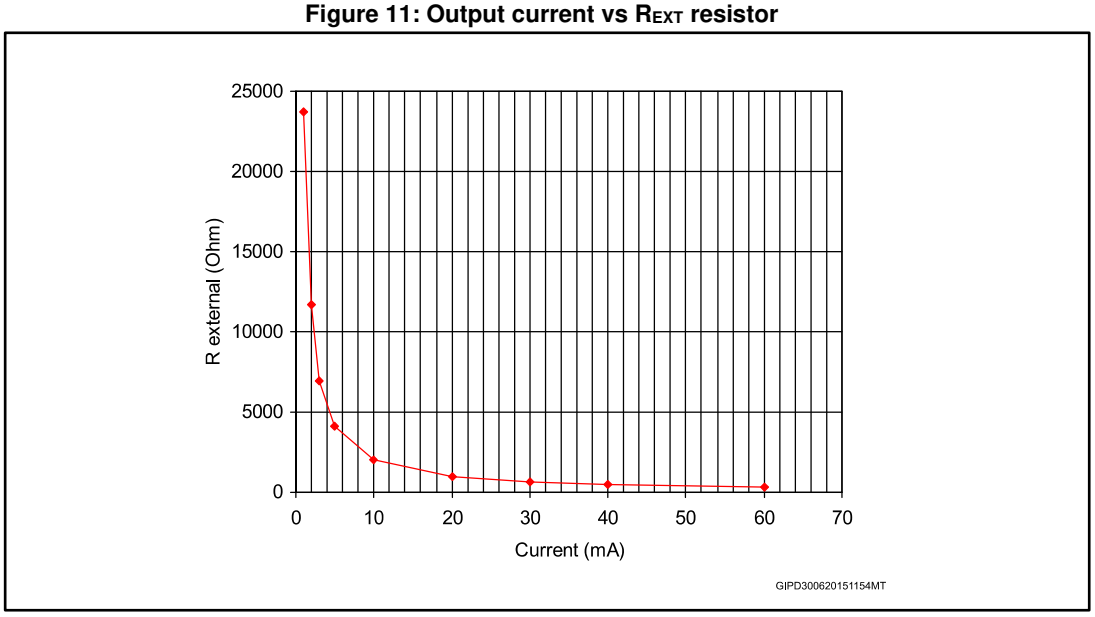

Table 11: Output current vs R_{EXT} resistor

R_{EXT} (Ω)	Output current (mA)
23700	1
11730	2
6930	3
4090	5
2025	10
1000	20
667	30
497	40
331	60

Conditions:

- temperature = 25 °C, V_{DD} = 3.3 V; 5.0 V, I_{SET} = 3 mA; 5 mA; 10 mA; 20 mA; 50 mA; 60 mA.

Figure 12: I_{SET} vs dropout voltage (V_{drop})

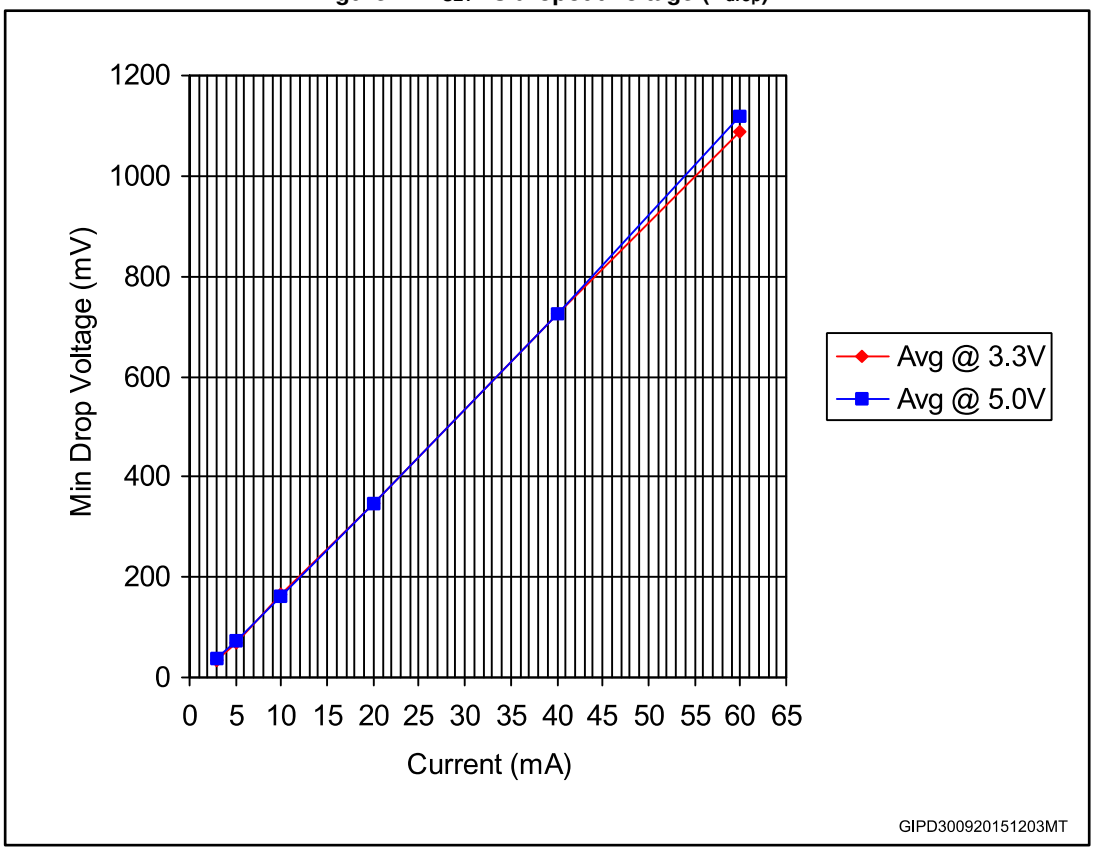

Table 12: I_{SET} vs dropout voltage (V_{drop})

Iout (mA)	Avg (mV) @ 3.3 V	Avg (mV) @ 5.0 V
3	36	37
5	71	72
10	163	163
20	346	347
40	724	726
60	1080	1110

T_A = 25 °C, V_{DD} = 3.3 V; 5 V.

Figure 13: Output current vs ± ΔIOL(%)

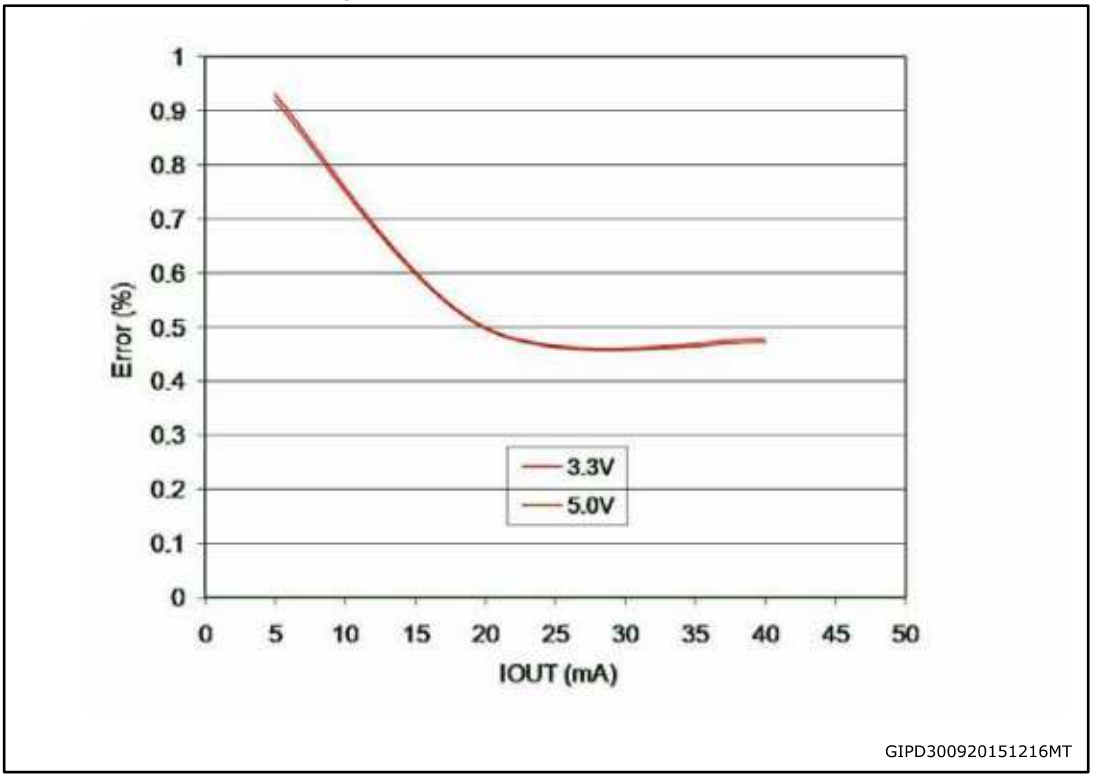

Figure 14: Idd ON/OFF

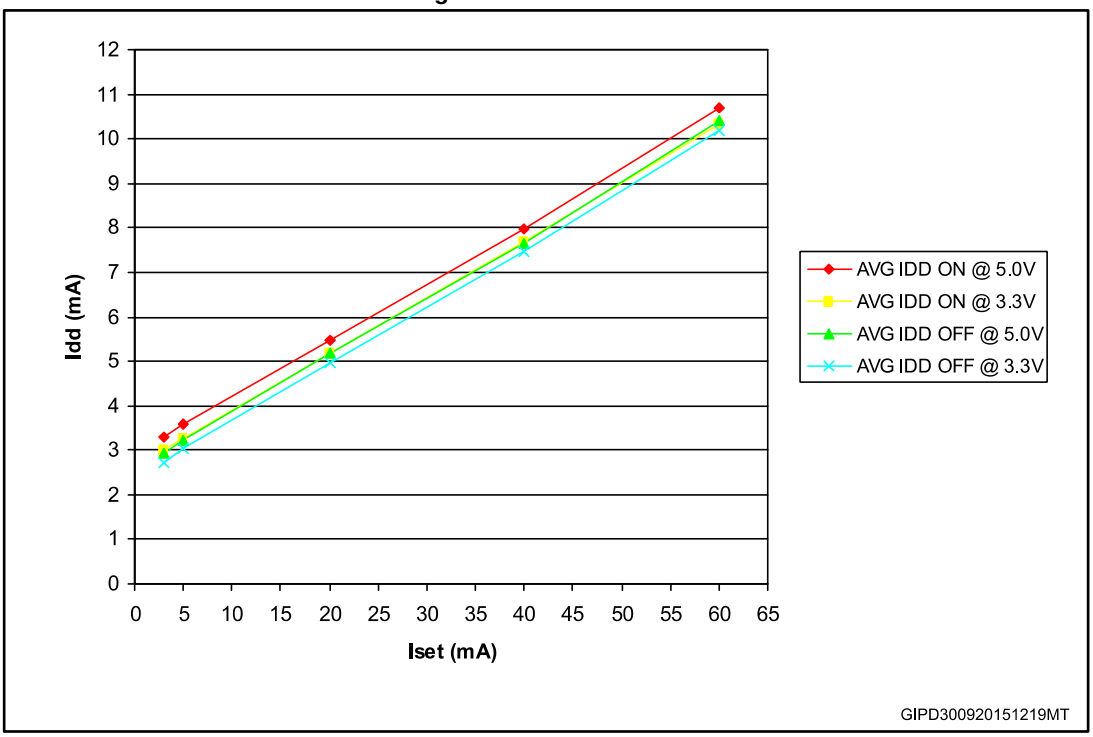

Figure 15: Power dissipation vs package temperature

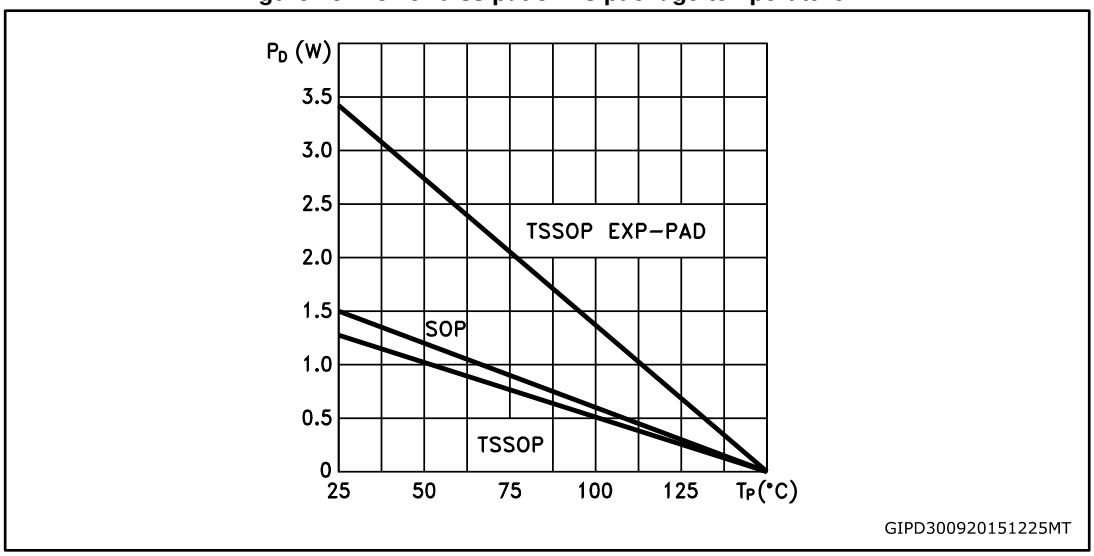

The exposed pad should be soldered to the PCB to obtain the thermal benefits.

Figure 16: Turn-ON output current characteristics(1)

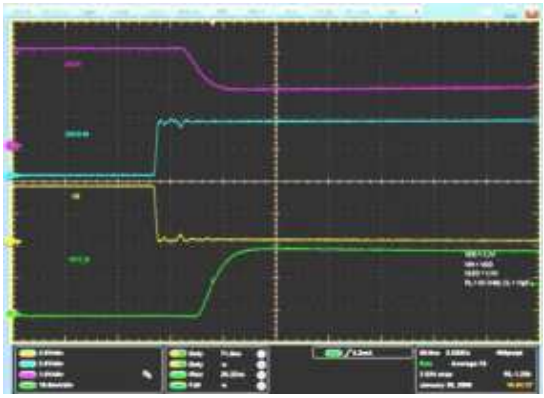

Figure 17: Turn-OFF output current characteristics(2)

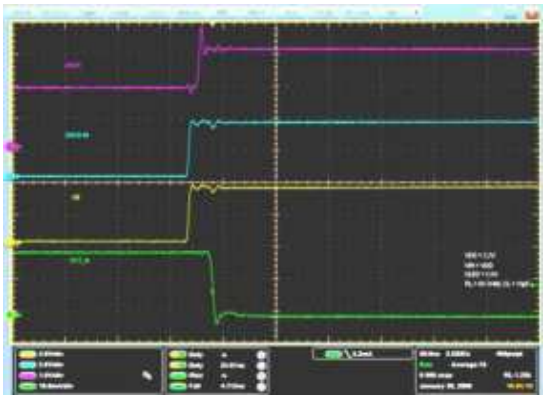

Notes:

(1)The reference level for the TON characteristics is 50 % of OE/DM2 signal and 90 % of output current.

(2)The reference level for the TOFF characteristics is 50 % of OE/DM2 signal and 10 % of output current.

Electrical conditions:

- V_{DD} = 3.3 V, Vin = V_{DD}, Vled = 3.0 V, RL = 60 Ω, CL = 10 pF.
- Ch1 (yellow) = OE/DM2, Ch2 (blue) = SDI, Ch3 (purple) = VOUT, Ch4 (green) = OUT.

7 Error detection mode functionality

7.1 Phase one: entering error detection mode

From the “normal mode” condition the device can switch to “error mode” by a logic sequence on the $\overline{\text{OE/DM2}}$ and LE/DM1 pins, as shown in the following table and diagram:

Table 13: Entering error detection mode - truth table

CLK	1°	2°	3°	4°	5°
$\overline{\text{OE/DM2}}$	H	L	H	H	H
LE/DM1	L	L	L	H	L

Figure 18: Entering error detection mode - timing diagram

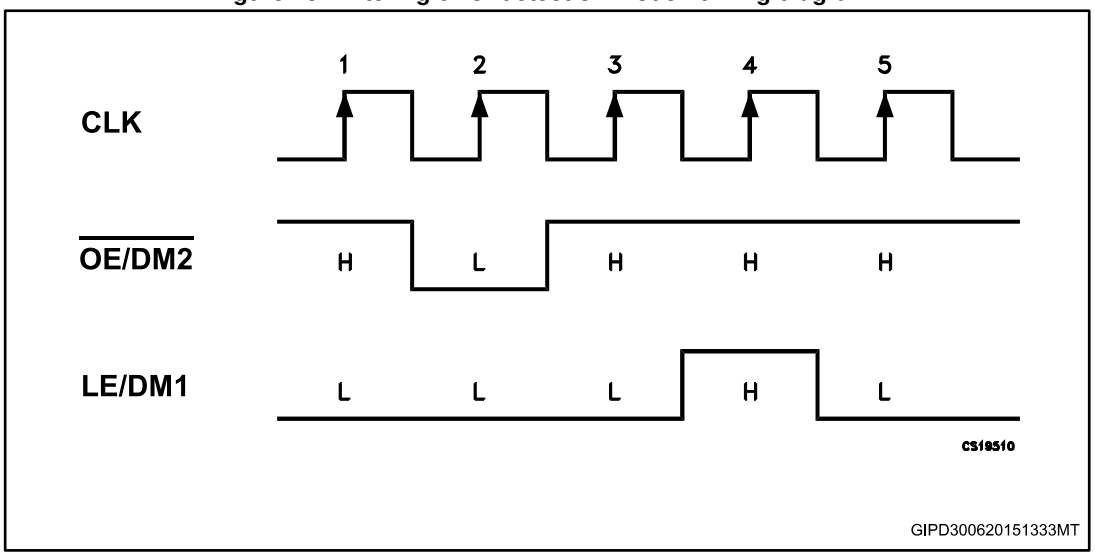

After these five CLK cycles, the device goes into the “error detection mode” and at the 6th rising edge of the CLK, the SDI data are ready for sampling.

7.2 Phase two: error detection

The 16 data bits must be set to “1” in order to set ON all the outputs during detection. The data are latched by LE/DM1 and after that the outputs are ready for the detection process. When the microcontroller switches the $\overline{\text{OE/DM2}}$ to LOW, the device drives the LEDs in order to analyze if an OPEN or SHORT condition has occurred.

Figure 19: Detection diagram

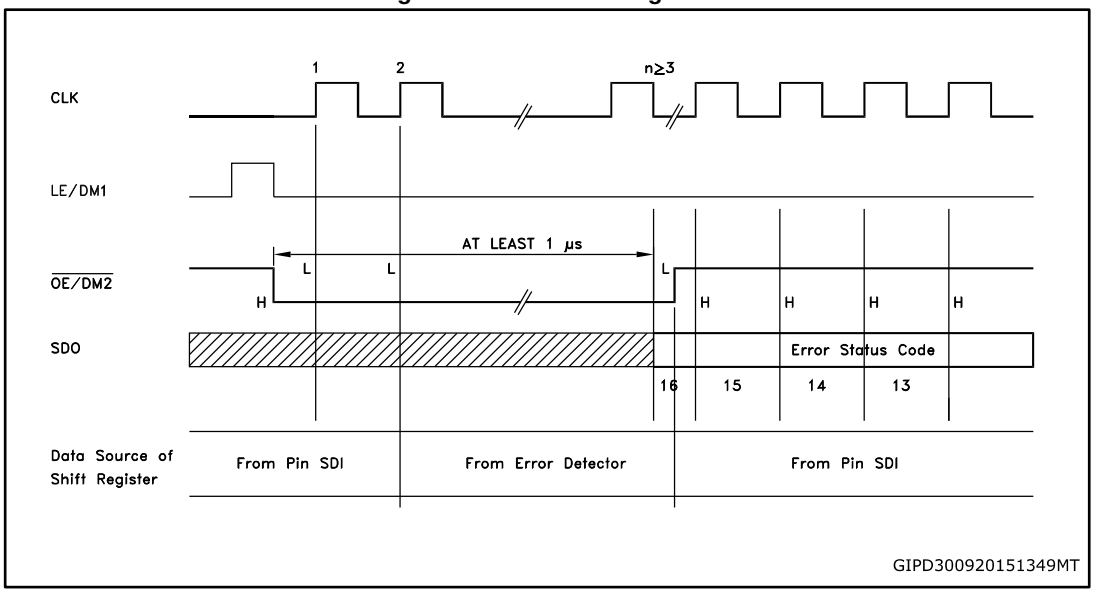

The LED status is detected in 1 microsecond (minimum) and after this time the microcontroller sets $\overline{\text{OE/DM2}}$ in HIGH state and the output data detection results go to the microprocessor via SDO.

Detection mode and normal mode both use the same data format. As soon as all the detection data bits are available on the serial line, the device may go back to normal mode of operation. To re-detect the status, the device must go back in normal mode and re-enter error detection mode.

Figure 20: Timing example for open and/or short-circuit detection

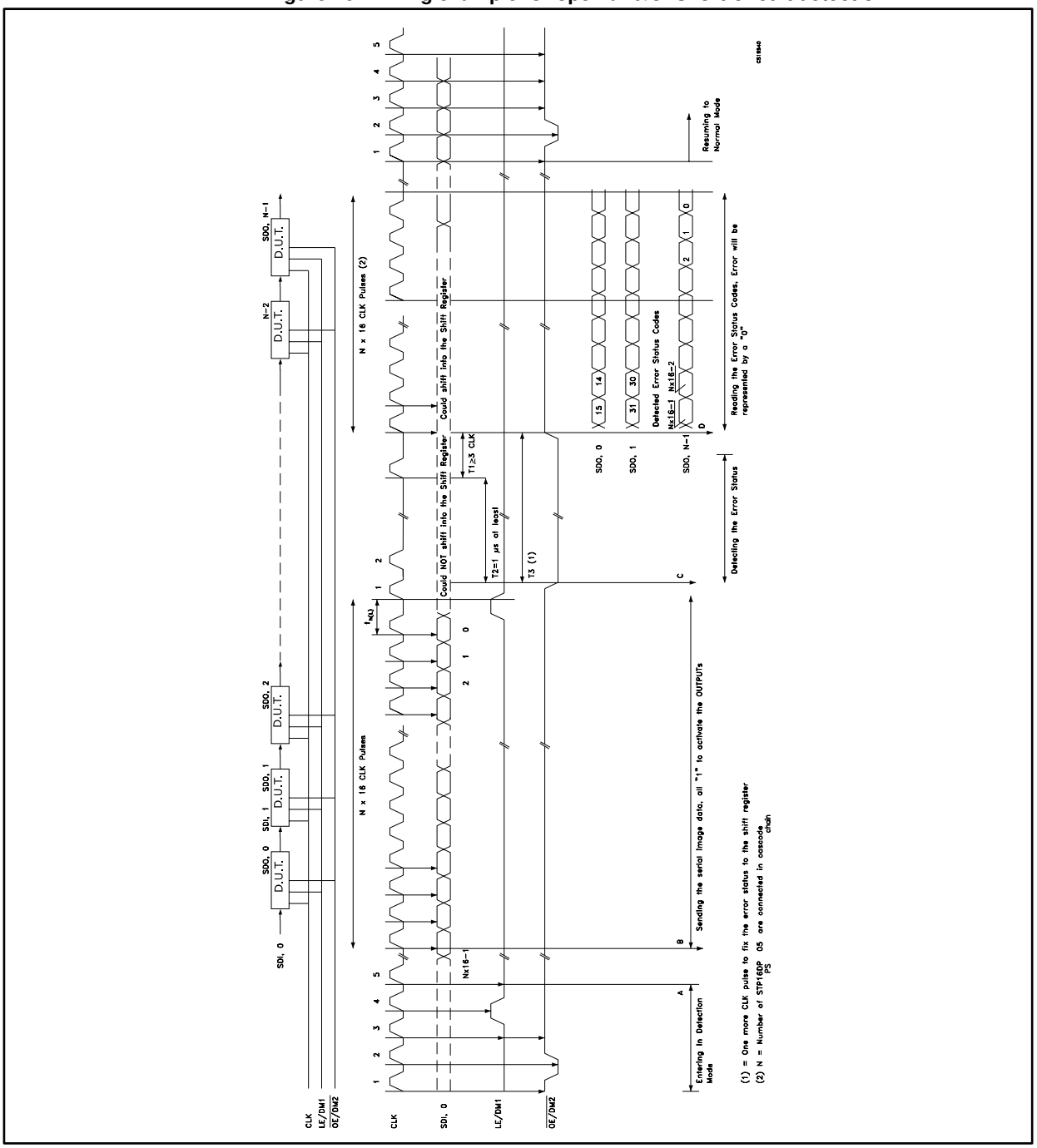

7.3 Phase three: resuming normal mode

The sequence for re-entering normal mode is shown in the following table:

Table 14: Resuming normal mode - timing diagram

CLK	1°	2°	3°	4°	5°
$\overline{OE}$/DM2	H	L	H	H	H
LE/DM1	L	L	L	L	L

For proper device operation, the “entering error detection” sequence must be followed by a “resume mode” sequence, it is not possible to insert consecutive equal sequences.

7.4 Error detection conditions

Table 15: Detection conditions (VDD = 3.3 to 5 V, temperature range -40 to 125 °C)

Configuration	Detect mode	Detection results		
SW-1 or SW-3b	Open line or output short to GND detected	==> $I_{ODEC} \leq 0.5 \times I_O$	No error detected	==> $I_{ODEC} \geq 0.5 \times I_O$
SW-2 or SW-3a	Short on LED or short to V-LED detected	==> $V_O \geq 2.6$ V	No error detected	==> $V_O \leq 2.3$ V

Where: I_O = the output current programmed by the R_{EXT}, I_{ODEC} = the detected output current in detection mode.

Figure 21: Detection circuit

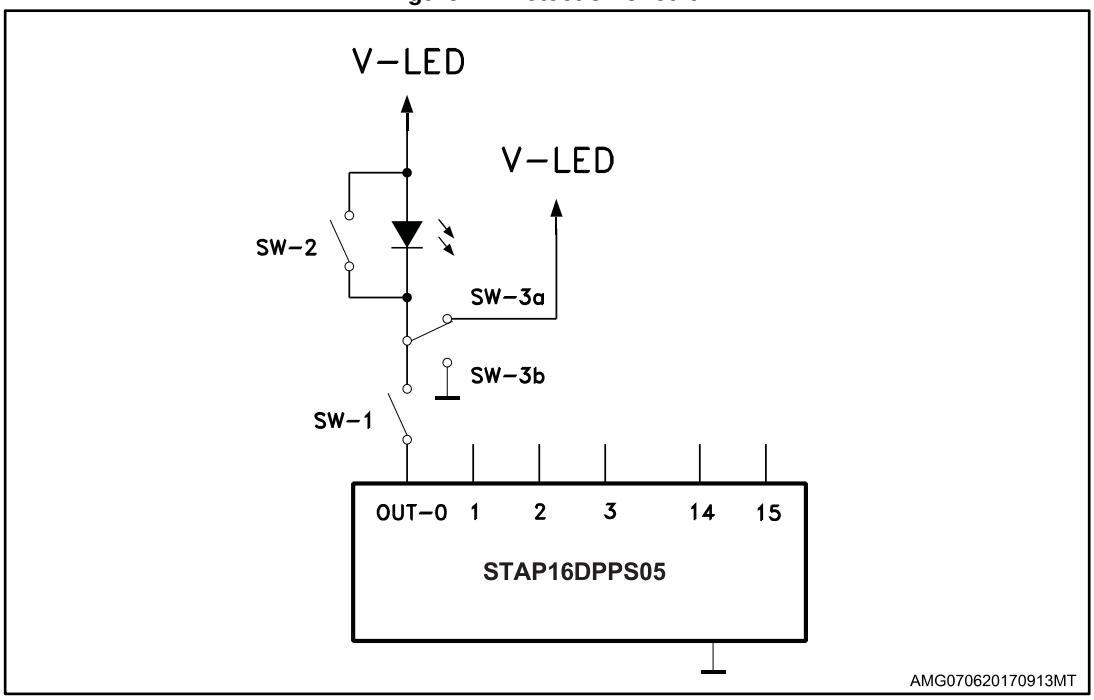

Figure 22: Error detection sequence

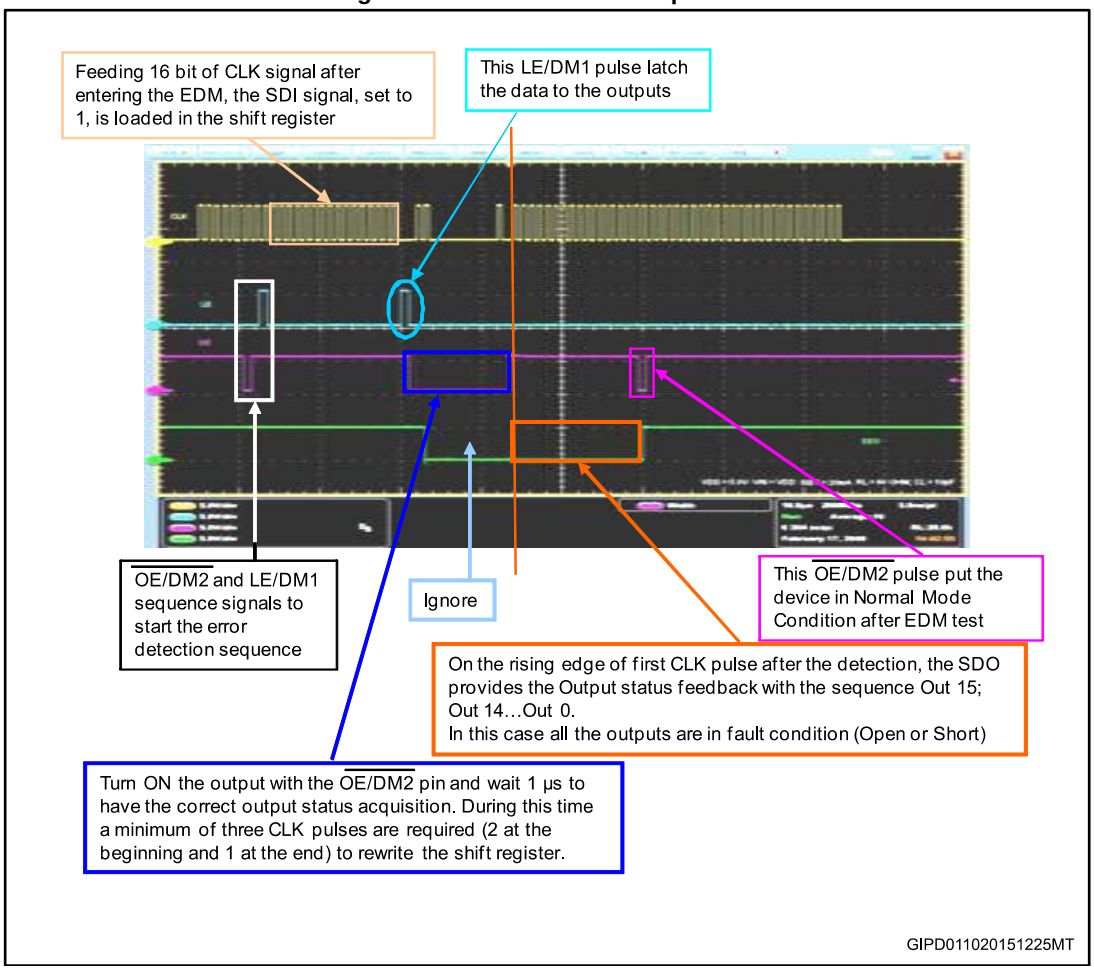

7.5 Auto power-saving

The auto power-saving feature minimizes the quiescent current if no active data is detected on the latches and auto powers-up the device as the first active data is latched.

Figure 23: Auto power-saving feature

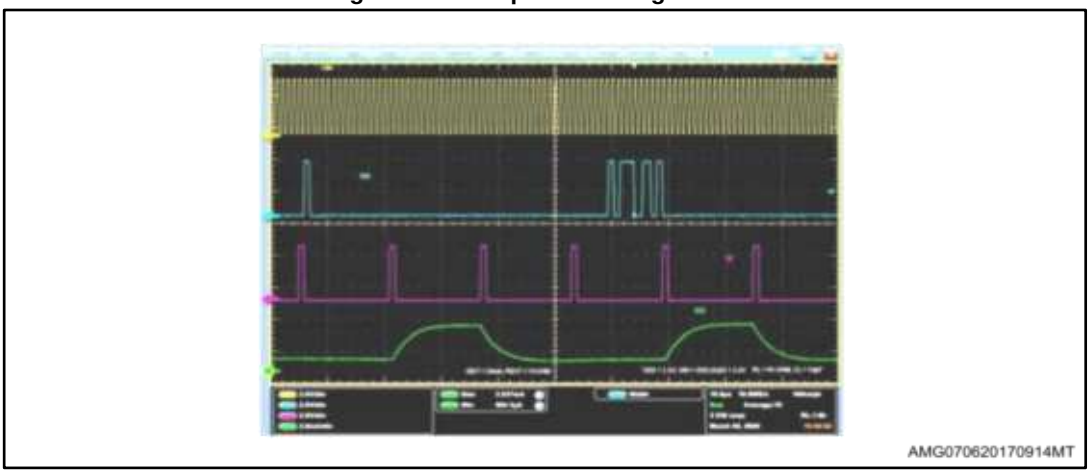

Conditions:

- Temp. = 25 °C, V_{DD} = 3.3 V, Vin = V_{DD}, VLed = 3.0 V, Iset = 20 mA
- Ch1 (yellow) = CLK, Ch2 (blue) = SDI, Ch3 (purple) = LE/DM1, Ch4 (green) = IDD

Idd consumption:

- Idd (normal operation) = 2.93 mA
- Idd (shutdown condition) = 170 µA

Figure 24: Auto power-saving feature: first output TON

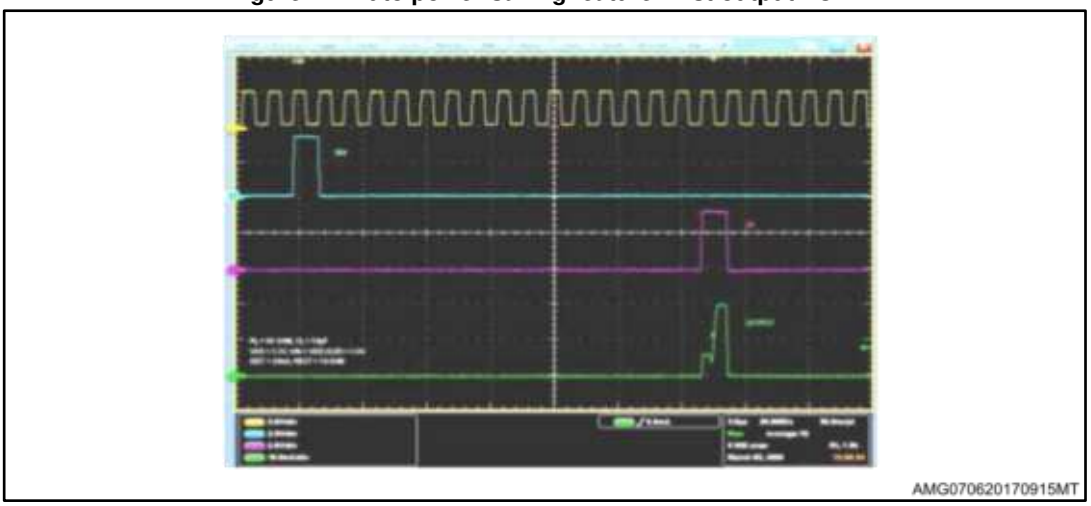

Conditions:

- Temp. = 25 °C, V_{DD} = 3.3 V, Vin = V_{DD}, VLed = 3.0 V, Iset = 20 mA
- Ch1 (yellow) = CLK, Ch2 (blue) = SDI, Ch3 (purple) = LE/DM1, Ch4 (green) = IDD

When the device goes from auto power-saving to normal operating condition, the first output switching ON shows the T_{ON} condition as seen in the plot above.

8 Package information

In order to meet environmental requirements, ST offers these devices in different grades of ECOPACK® packages, depending on their level of environmental compliance. ECOPACK® specifications, grade definitions and product status are available at: ***www.st.com***. ECOPACK® is an ST trademark.

8.1 TSSOP24 exposed pad package information

Figure 25: TSSOP24 exposed pad package outline

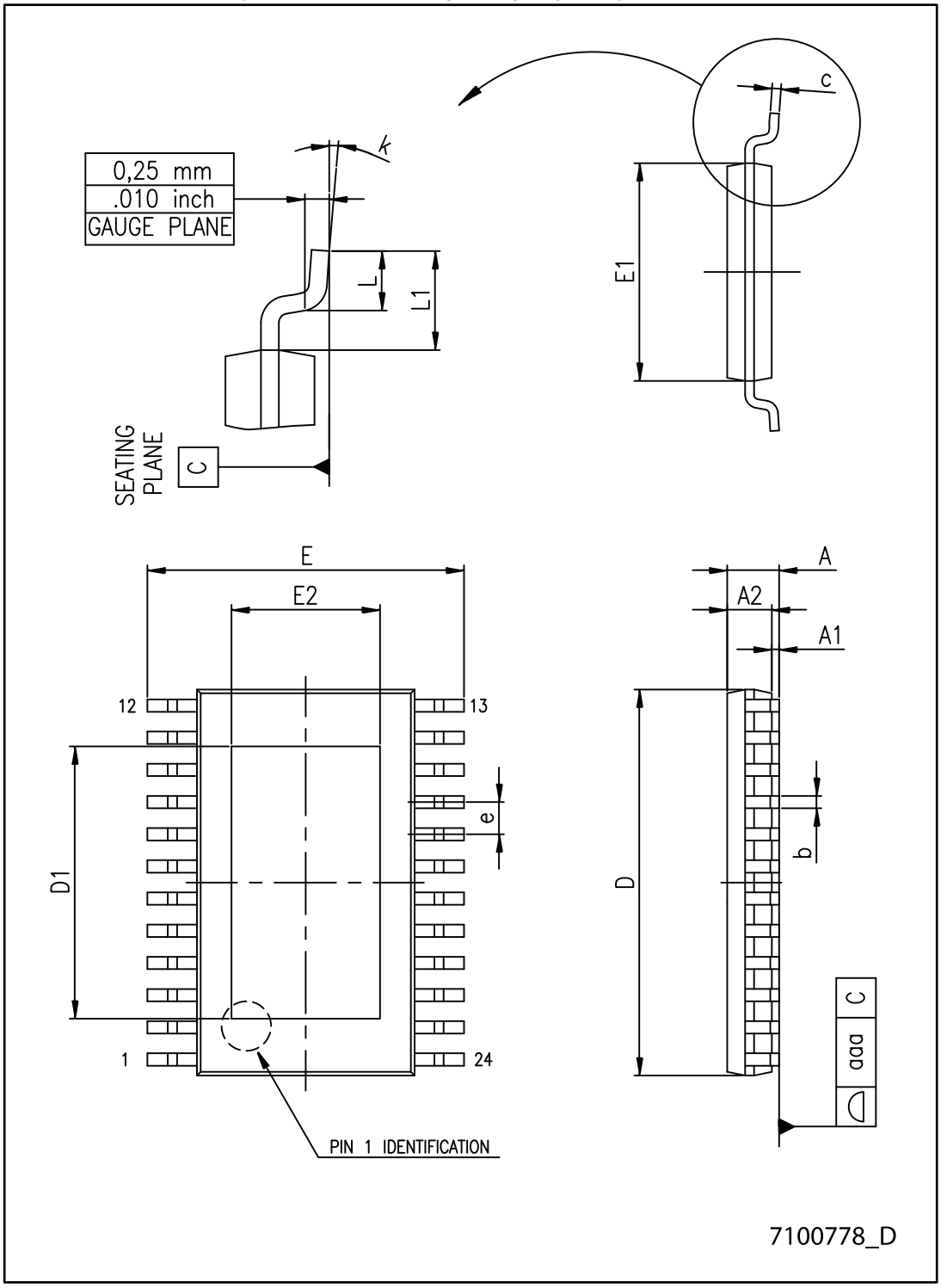

Table 16: TSSOP24 exposed pad mechanical data

Dim.	mm		
	Min.	Typ.	Max.
A			1.20
A1			0.15
A2	0.80	1.00	1.05
b	0.19		0.30
c	0.09		0.20
D	7.70	7.80	7.90
D1	4.80	5.00	5.2
E	6.20	6.40	6.60
E1	4.30	4.40	4.50
E2	3.00	3.20	3.40
e		0.65	
L	0.45	060	0.75
L1		1.00	
k	0°		8°
aaa			0.10

8.2 TSSOP24 packing information

Figure 26: TSSOP24 reel outline

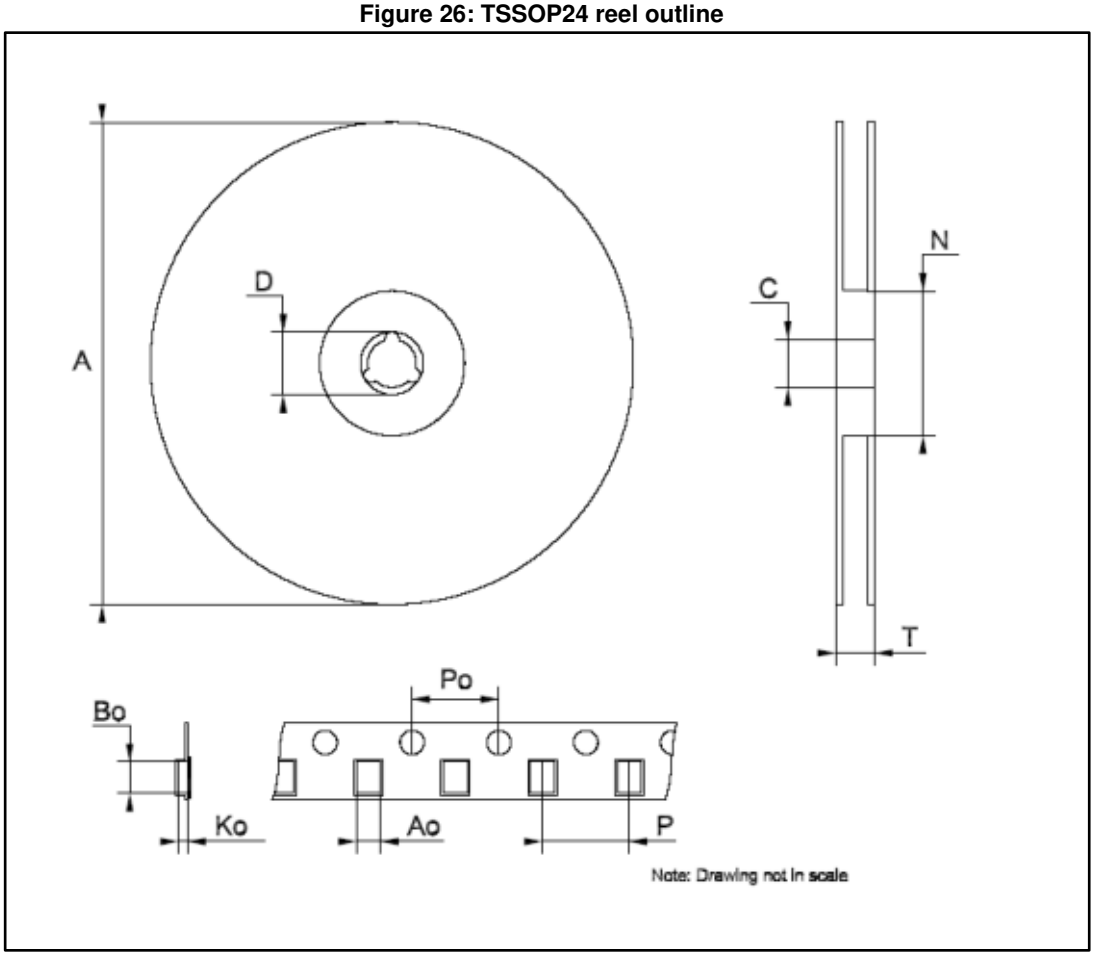

Table 17: TSSOP24 tape and reel mechanical data

Dim.	mm		
	Min.	Typ.	Max.
A		-	330
C	12.8	-	13.2
D	20.2	-	
N	60	-	
T		-	22.4
Ao	6.8	-	7
Bo	8.2	-	8.4
Ko	1.7	-	1.9
Po	3.9	-	4.1
P	11.9	-	12.1

9 Revision history

Table 18: Document revision history

Date	Revision	Changes
21-May-2013	1	Initial release.
01-Jul-2013	2	Added footnote in Table 8: Switching characteristics.
11-Oct-2013	3	Modified T_{OPR} value in Table 4: Absolute maximum ratings.
10-Mar-2014	4	Modified footnote 1 in Table 8: Switching characteristics. Added footnote 2 in Table 8: Switching characteristics. Updated Table 1: Pin connections and Table 3: Pin description.
05-Jun-2014	5	Updated Table 16: TSSOP24 exposed pad mechanical data. Minor text changes.
10-Nov-2015	6	Updated features in cover page. Minor text changes.
07-Nov-2017	7	Updated title in cover page. Updated *Figure 5: "SDO terminal"*, *Figure 8: "Clock, serial-in, serial-out"* , *Figure 9: "Clock, serial-in, latch, enable, outputs"* and *Section 8: "Package information"*. Minor text changes.

IMPORTANT NOTICE – PLEASE READ CAREFULLY

STMicroelectronics NV and its subsidiaries (“ST”) reserve the right to make changes, corrections, enhancements, modifications, and improvements to ST products and/or to this document at any time without notice. Purchasers should obtain the latest relevant information on ST products before placing orders. ST products are sold pursuant to ST’s terms and conditions of sale in place at the time of order acknowledgement.

Purchasers are solely responsible for the choice, selection, and use of ST products and ST assumes no liability for application assistance or the design of Purchasers’ products.

No license, express or implied, to any intellectual property right is granted by ST herein.

Resale of ST products with provisions different from the information set forth herein shall void any warranty granted by ST for such product.

ST and the ST logo are trademarks of ST. All other product or service names are the property of their respective owners.

Information in this document supersedes and replaces information previously supplied in any prior versions of this document.

© 2017 STMicroelectronics – All rights reserved