STGB40V60F

Datasheet

Trench gate field-stop IGBT, V series 600 V, 40 A very high speed

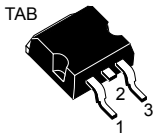

D²PAK

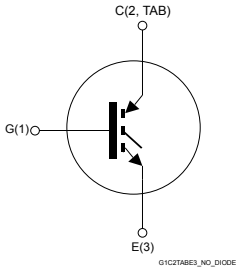

Features

- Maximum junction temperature: T_J = 175 °C
- Tail-less switching off
- $V_{CE(sat)}$ = 1.8 V (typ.) @ I_C = 40 A
- Tight parameters distribution
- Safe paralleling
- Low thermal resistance

Applications

- Welding
- PFC converters - single phase input
- Solar inverters (string and central)
- Uninterruptable power supplies (UPS)
- EV charging - DC fast charging stations

Description

This device is an IGBT developed using an advanced proprietary trench gate field-stop structure. The device is part of the V series IGBTs, which represent an optimum compromise between conduction and switching losses to maximize the efficiency of very high frequency converters. Furthermore, the positive $V_{CE(sat)}$ temperature coefficient and very tight parameter distribution result in safer paralleling operation.

Product status link
STGB40V60F

Product summary	
Order code	STGB40V60F
Marking	GB40V60F
Package	D²PAK
Packing	Tape and reel

1 Electrical ratings

Table 1. Absolute maximum ratings

Symbol	Parameter	Value	Unit
V_{CES}	Collector-emitter voltage (V_{GE} = 0 V)	600	V
I_C	Continuous collector current at T_C = 25 °C	80	A
	Continuous collector current at T_C = 100 °C	40	A
I_{CP}(1)	Pulsed collector current	160	A
V_{GE}	Gate-emitter voltage	±20	V
P_{TOT}	Total power dissipation at T_C = 25 °C	283	W
T_{stg}	Storage temperature range	-55 to 150	°C
T_J	Operating junction temperature range	-55 to 175	°C

1. *Pulse width is limited by maximum junction temperature.*

Table 2. Thermal data

Symbol	Parameter	Value	Unit
R_{thJC}	Thermal resistance, junction-to-case	0.53	°C/W
R_{thJA}	Thermal resistance, junction-to-ambient	50	°C/W

2 Electrical characteristics

T_J = 25 °C unless otherwise specified.

Table 3. Static characteristics

Symbol	Parameter	Test conditions	Min.	Typ.	Max.	Unit
$V_{(BR)CES}$	Collector-emitter breakdown voltage	V_{GE} = 0 V, I_C = 2 mA	600			V
$V_{CE(sat)}$	Collector-emitter saturation voltage	V_{GE} = 15 V, I_C = 40 A		1.8	2.3	V
		V_{GE} = 15 V, I_C = 40 A, T_J = 125 °C		2.15		
		V_{GE} = 15 V, I_C = 40 A, T_J = 175 °C		2.35		
$V_{GE(th)}$	Gate threshold voltage	V_{CE} = V_{GE}, I_C = 1 mA	5	6	7	V
I_{CES}	Collector cut-off current	V_{GE} = 0 V, V_{CE} = 600 V			25	µA
I_{GES}	Gate-emitter leakage current	V_{CE} = 0 V, V_{GE} = ±20 V			±250	nA

Table 4. Dynamic characteristics

Symbol	Parameter	Test conditions	Min.	Typ.	Max.	Unit
C_{ies}	Input capacitance	V_{CE} = 25 V, f = 1 MHz, V_{GE} = 0 V	-	5400	-	pF
C_{oes}	Output capacitance		-	220	-	pF
C_{res}	Reverse transfer capacitance		-	180	-	pF
Q_g	Total gate charge	V_{CC} = 480 V, I_C = 40 A, V_{GE} = 0 to 15 V (see Figure 22. Gate charge test circuit)	-	226	-	nC
Q_{ge}	Gate-emitter charge		-	38	-	nC
Q_{gc}	Gate-collector charge		-	95	-	nC

Table 5. Switching characteristics (inductive load)

Symbol	Parameter	Test conditions	Min.	Typ.	Max.	Unit
$t_{d(on)}$	Turn-on delay time	V_{CE} = 400 V, I_C = 40 A, R_G = 10 Ω, V_{GE} = 15 V (see Figure 21. Test circuit for inductive load switching)	-	52	-	ns
t_r	Current rise time		-	17	-	ns
$(di/dt)_{on}$	Turn-on current slope		-	1850	-	A/µs
$t_{d(off)}$	Turn-off delay time		-	208	-	ns
t_f	Current fall time		-	20	-	ns
E_{on} (1)	Turn-on switching energy		-	456	-	µJ
E_{off} (2)	Turn-off switching energy		-	411	-	µJ
E_{ts}	Total switching energy		-	867	-	µJ
$t_{d(on)}$	Turn-on delay time	V_{CE} = 400 V, I_C = 40 A, R_G = 10 Ω, V_{GE} = 15 V, T_J = 175 °C (see Figure 21. Test circuit for inductive load switching)	-	52	-	ns
t_r	Current rise time		-	21	-	ns
$(di/dt)_{on}$	Turn-on current slope		-	1538	-	A/µs
$t_{d(off)}$	Turn-off-delay time		-	220	-	ns
t_f	Current fall time		-	21	-	ns
E_{on} (1)	Turn-on switching energy		-	1330	-	µJ
E_{off} (2)	Turn-off switching energy		-	560	-	µJ
E_{ts}	Total switching energy		-	1890	-	µJ

1. *Including the reverse recovery of the external diode.*
2. *Including the tail of the collector current.*

2.1 Electrical characteristics (curves)

Figure 1. Power dissipation vs case temperature

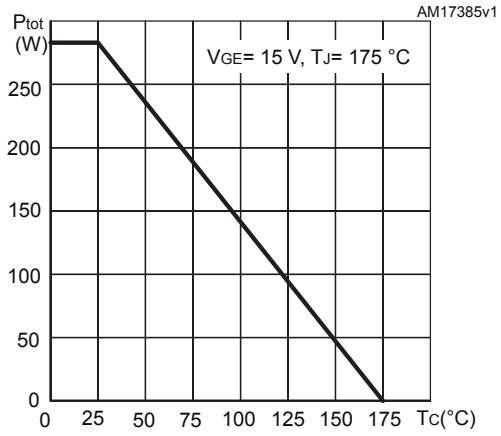

Figure 2. Collector current vs case temperature

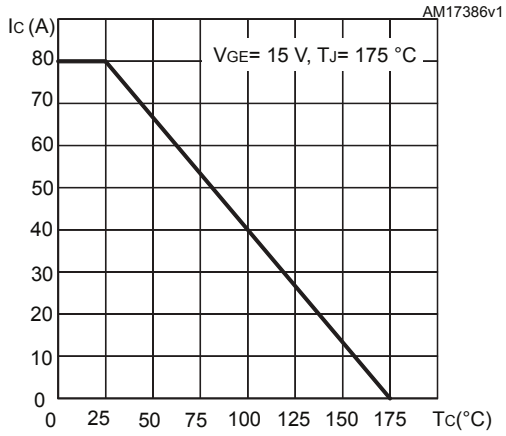

Figure 3. Output characteristics (T_J = 25 °C)

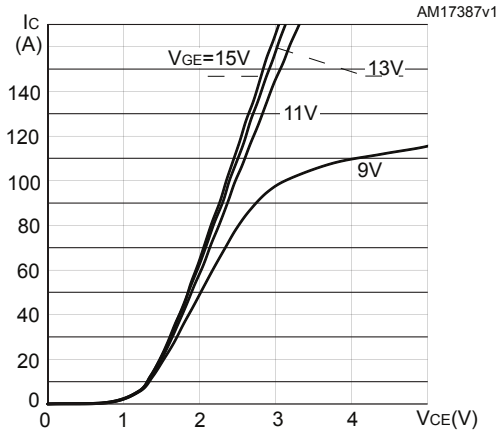

Figure 4. Output characteristics (T_J = 175 °C)

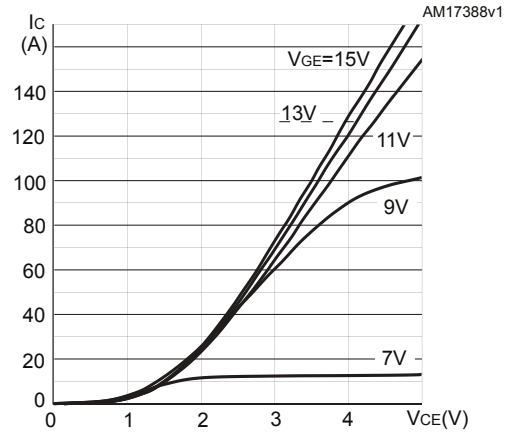

Figure 5. $V_{CE(sat)}$ vs junction temperature

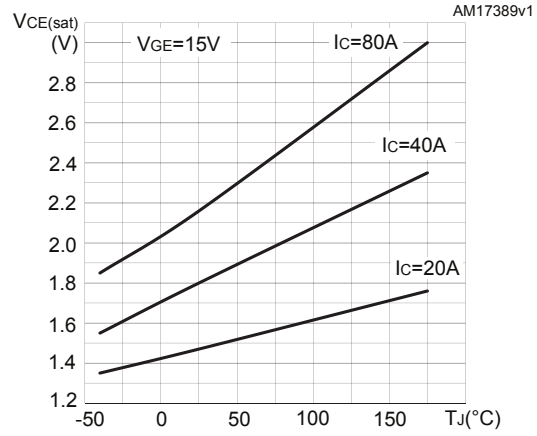

Figure 6. $V_{CE(sat)}$ vs collector current

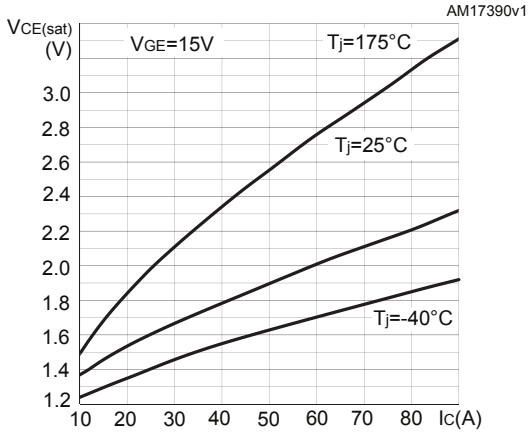

Figure 7. Collector current vs switching frequency

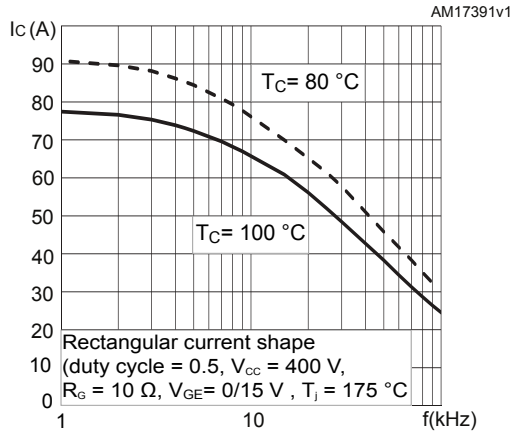

Figure 8. Forward bias safe operating area

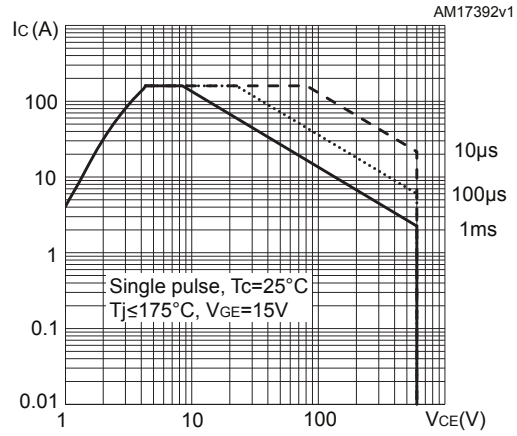

Figure 9. Transfer characteristics

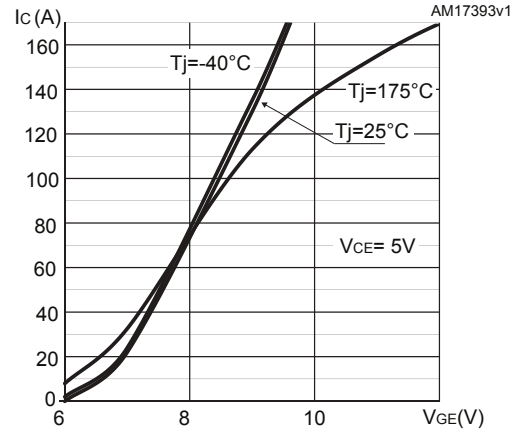

Figure 10. Normalized $V_{GE(th)}$ vs junction temperature

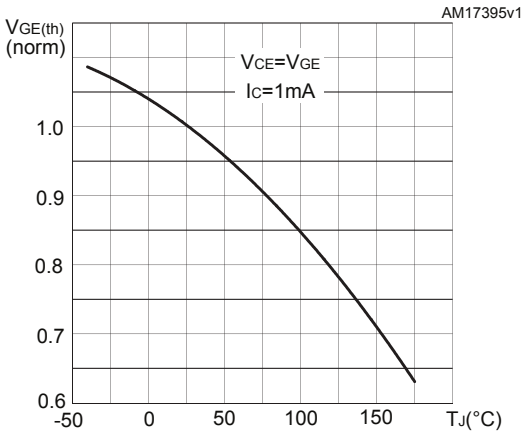

Figure 11. Normalized $V_{(BR)CES}$ vs junction temperature

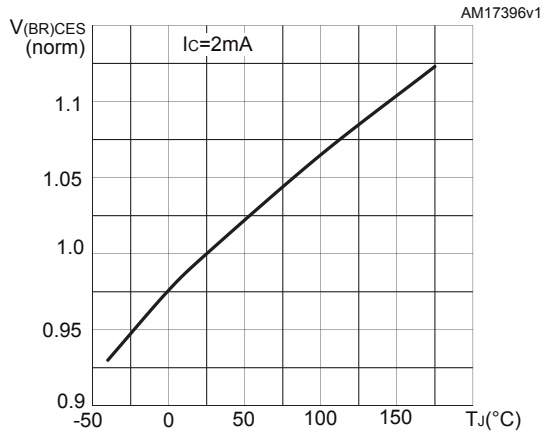

Figure 12. Capacitance variations

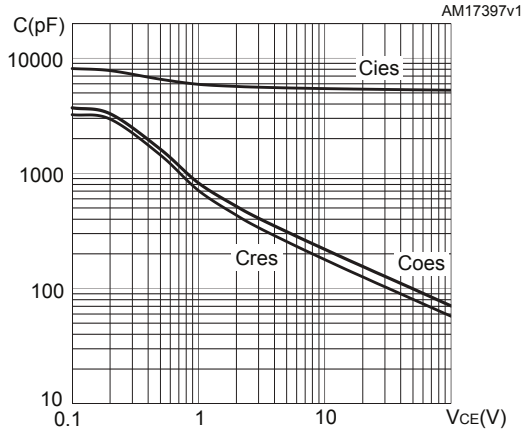

Figure 13. Gate charge vs gate-emitter voltage

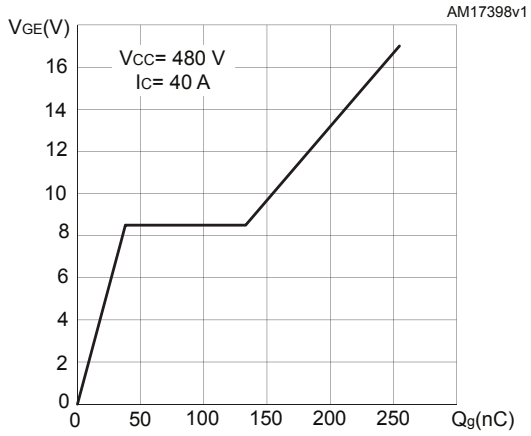

Figure 14. Switching energy vs collector current

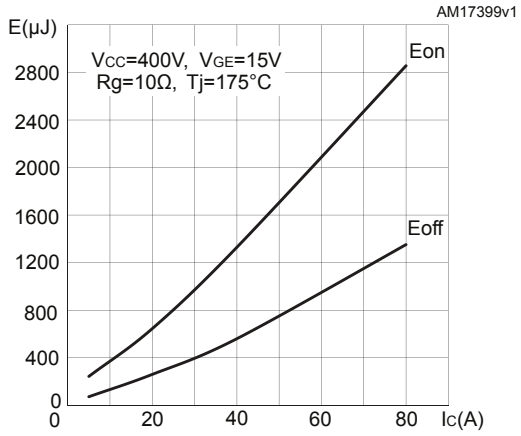

Figure 15. Switching energy vs gate resistance

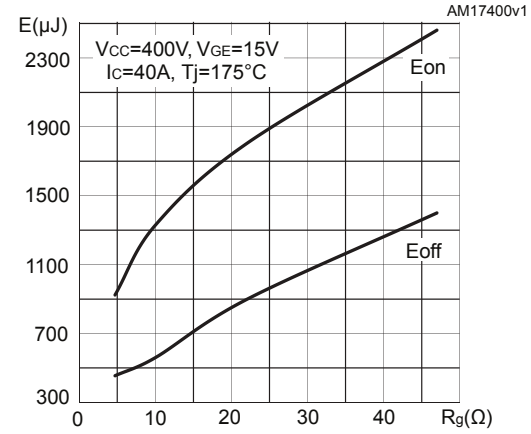

Figure 16. Switching energy vs junction temperature

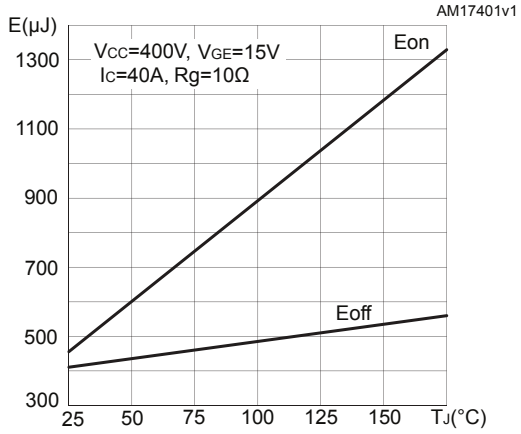

Figure 17. Switching energy vs collector emitter voltage

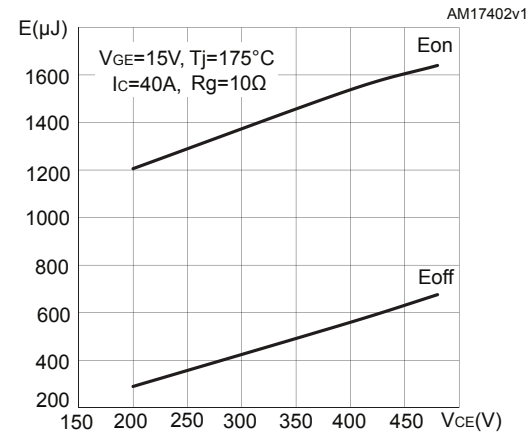

Figure 18. Switching times vs collector current

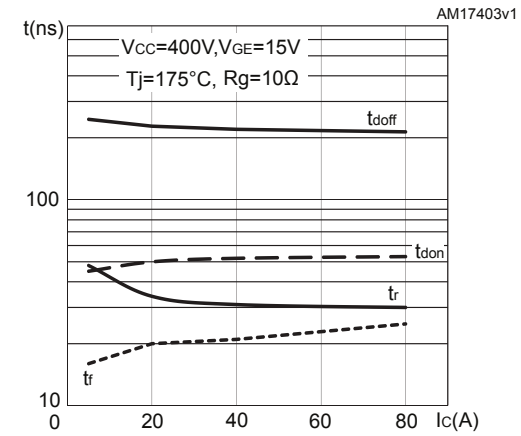

Figure 19. Switching times vs gate resistance

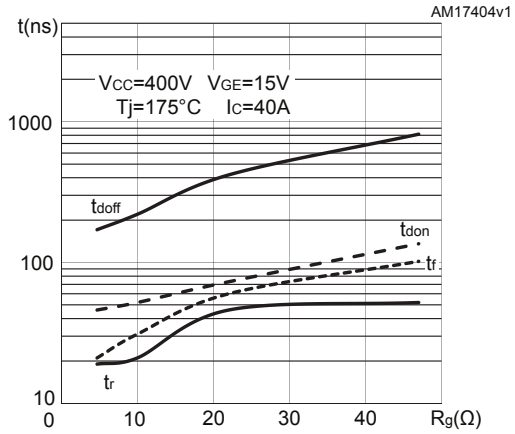

Figure 20. Thermal impedance

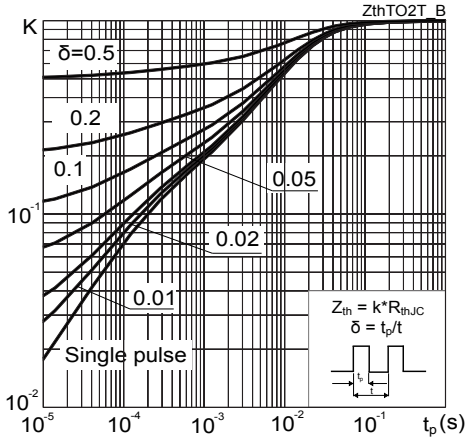

3 Test circuits

Figure 21. Test circuit for inductive load switching

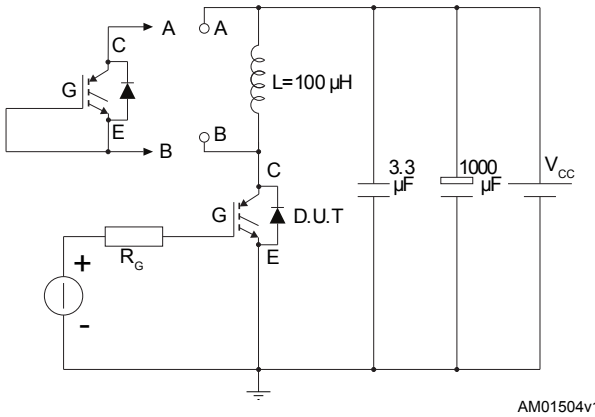

Figure 22. Gate charge test circuit

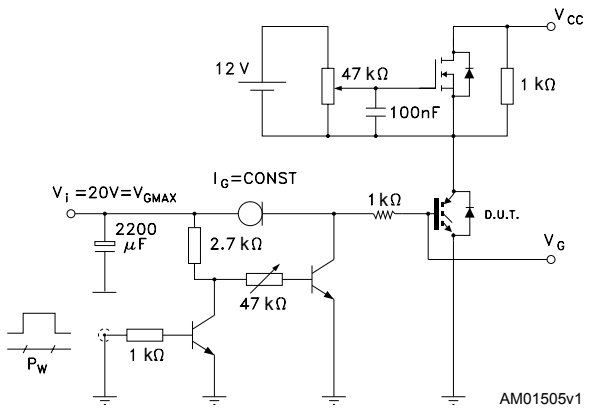

Figure 23. Switching waveform

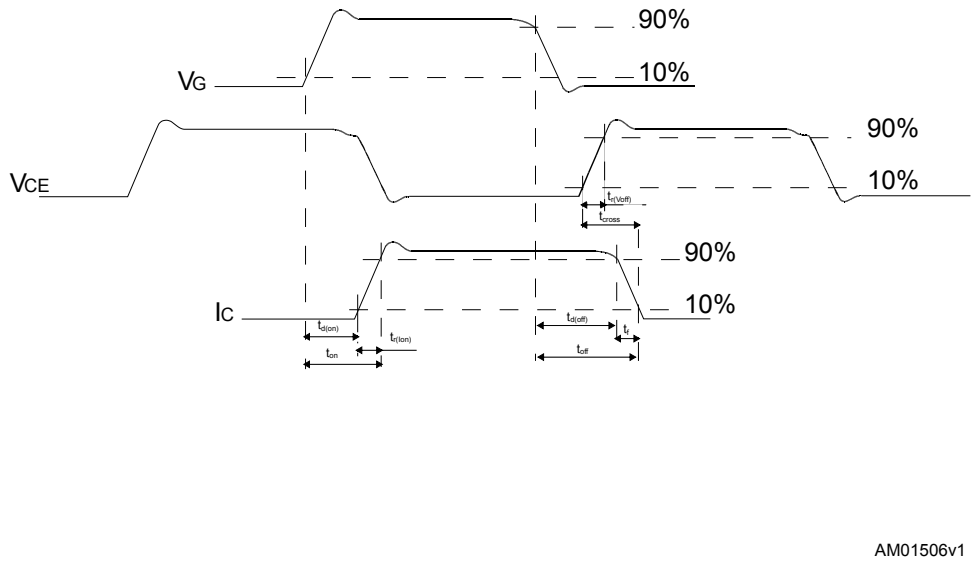

4 Package information

To meet environmental requirements, ST offers these devices in different grades of ECOPACK packages, depending on their level of environmental compliance. ECOPACK specifications, grade definitions, and product status are available at: www.st.com. ECOPACK is an ST trademark.

4.1 D²PAK (TO-263) type A2 package information

Figure 24. D²PAK (TO-263) type A2 package outline

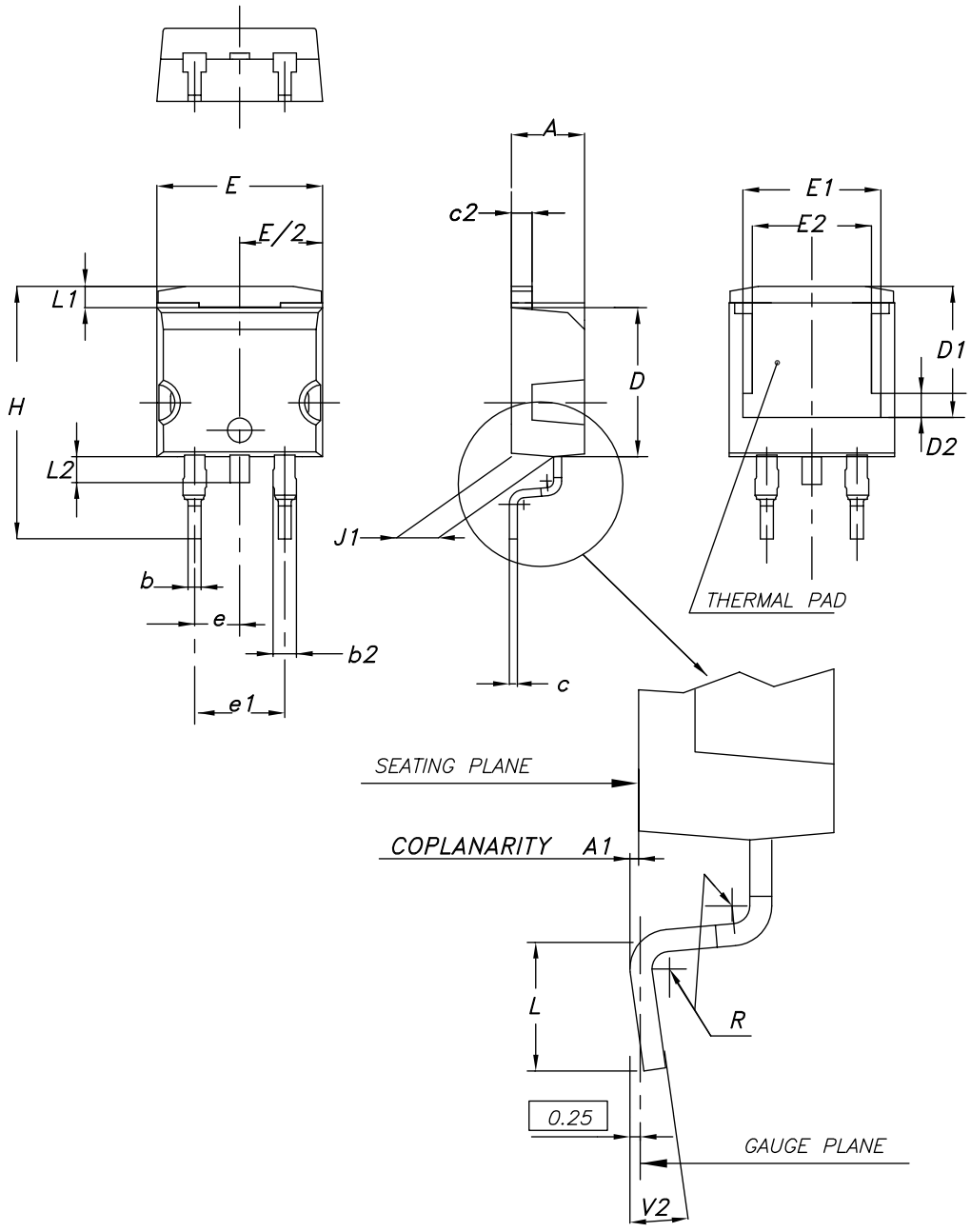

0079457_A2_27

Table 6. D²PAK (TO-263) type A2 package mechanical data

Dim.	mm		
	Min.	Typ.	Max.
A	4.40		4.60
A1	0.03		0.23
b	0.70		0.93
b2	1.14		1.70
c	0.45		0.60
c2	1.23		1.36
D	8.95		9.35
D1	7.50	7.75	8.00
D2	1.10	1.30	1.50
E	10.00		10.40
E1	8.70	8.90	9.10
E2	7.30	7.50	7.70
e		2.54	
e1	4.88		5.28
H	15.00		15.85
J1	2.49		2.69
L	2.29		2.79
L1	1.27		1.40
L2	1.30		1.75
R		0.40	
V2	0°		8°

Figure 25. D²PAK (TO-263) recommended footprint (dimensions are in mm)

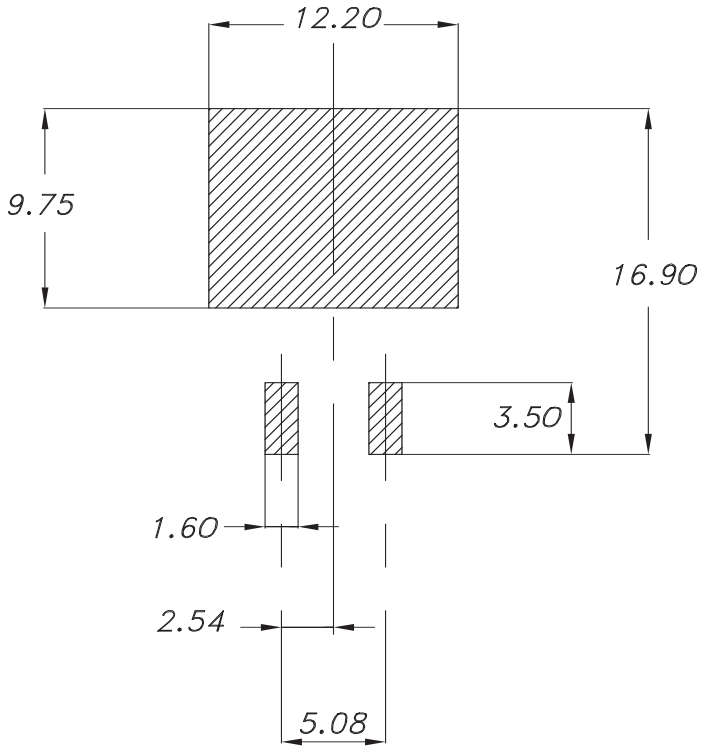

4.2 D²PAK packing information

Figure 26. D²PAK tape drawing (dimensions are in mm)

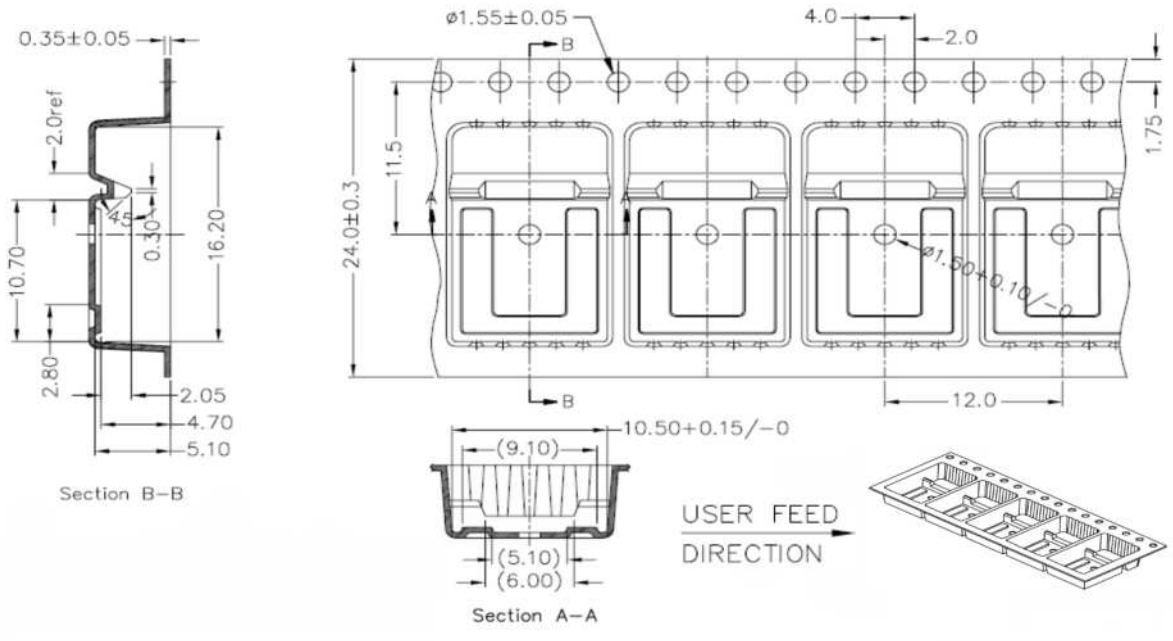

Revision history

Table 7. **Document revision history**

Date	Revision	Changes
04-Jun-2013	1	Initial release
23-Apr-2014	2	Updated title, features and description in cover page. Added new device in TO-3PF. Updated *Table 1: Device summary, Table 2: Absolute maximum ratings Table 3: Thermal data* and *Section 4: Package mechanical data.* Added *Figure 4: Power dissipation vs. case temperature for TO-3PF, Figure 5: Collector current vs. case temperature for TO-3PF, Figure 11: Collector current vs. switching frequency for TO-3PF* and *Figure 12: Forward bias safe operating area for D2PAK, TO-247* and *TO-3P*. Minor text changes.
04-Mar-2021	3	Modified application section on cover page. Modified *Table 1. Absolute maximum ratings*, *Table 2. Thermal data*. Modified *Figure 4. Power dissipation vs case temperature for TO-3PF*, *Figure 5. Collector current vs case temperature for TO-3PF*, *Figure 11. Collector current vs switching frequency for TO-3PF* and *Figure 13. Forward bias safe operating area for TO-3PF*.
14-May-2025	4	Obsolete part numbers (STGFW40V60F, STGP40V60F e STGW40V60F) have been removed. The document has been updated accordingly.

Contents

1 **Electrical ratings** 2
2 **Electrical characteristics** 3
2.1 Electrical characteristics (curves) 5
3 **Test circuits** 9
4 **Package information** 10
4.1 D²PAK (TO-263) type A2 package information 10
4.2 D²PAK packing information 12
Revision history 13

IMPORTANT NOTICE – READ CAREFULLY

STMicroelectronics NV and its subsidiaries (“ST”) reserve the right to make changes, corrections, enhancements, modifications, and improvements to ST products and/or to this document at any time without notice. Purchasers should obtain the latest relevant information on ST products before placing orders. ST products are sold pursuant to ST’s terms and conditions of sale in place at the time of order acknowledgment.

Purchasers are solely responsible for the choice, selection, and use of ST products and ST assumes no liability for application assistance or the design of purchasers’ products.

No license, express or implied, to any intellectual property right is granted by ST herein.

Resale of ST products with provisions different from the information set forth herein shall void any warranty granted by ST for such product.

ST and the ST logo are trademarks of ST. For additional information about ST trademarks, refer to www.st.com/trademarks. All other product or service names are the property of their respective owners.

Information in this document supersedes and replaces information previously supplied in any prior versions of this document.

© 2025 STMicroelectronics – All rights reserved