STS9P2UH7

P-channel 20 V, 0.0195 Ω typ., 9 A STripFET™ H7 Power MOSFET in a SO-8 package

Datasheet - production data

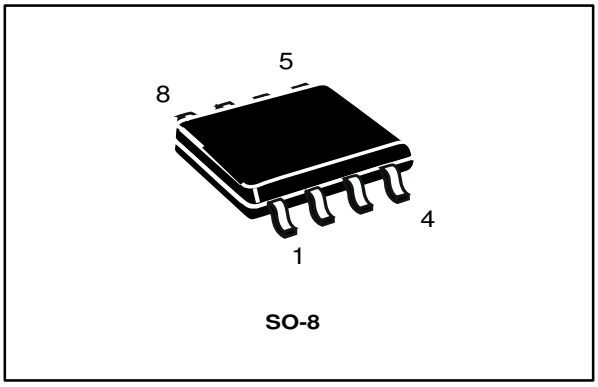

Figure 1: Internal schematic diagram

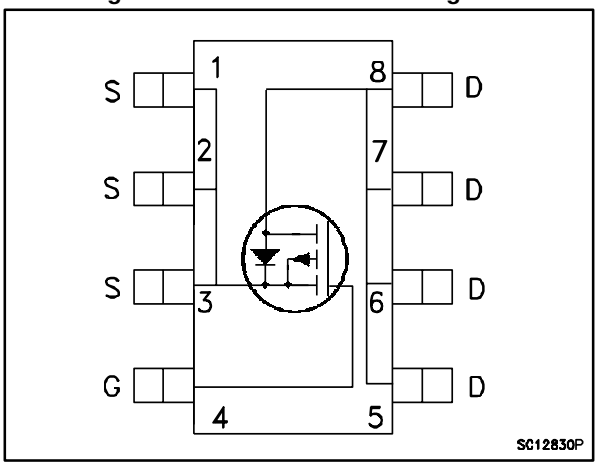

Features

Order code	V_{DS}	$R_{DS(on)}$ max	I_D
STS9P2UH7	20 V	0.0225 Ω @ 4.5 V	9 A

- Very low on-resistance
- Very low capacitance and gate charge
- High avalanche ruggedness
- Ultra logic level

Applications

- Switching applications

Description

This device exhibits low on-state resistance and capacitance for improved conduction and switching performance.

Table 1: Device summary

Order code	Marking	Package	Packaging
STS9P2UH7	9L2U	SO-8	Tape and reel

For the P-channel Power MOSFET the actual polarity of the voltages and the current must be reversed.

This is information on a product in full production. www.st.com

Contents

1 Electrical ratings 3
2 Electrical characteristics 4
2.1 Electrical characteristics (curves) 6
3 Test circuits 8
4 Package mechanical data 9
4.1 SO-8 package mechanical data 9
5 Packaging mechanical data 12
5.1 SO-8 tape and reel mechanical data 12
6 Revision history 14

1 Electrical ratings

Table 2: Absolute maximum ratings

Symbol	Parameter	Value	Unit
V_{DS}	Drain-source voltage	20	V
V_{GS}	Gate-source voltage	± 8	V
I_D	Drain current (continuous) at T_{pcb} = 25 °C	9	A
I_D	Drain current (continuous) at T_{pcb} = 100 °C	5.8	A
I_{DM} (1)	Drain current (pulsed)	36	A
P_{TOT}	Total dissipation at T_{pcb} = 25 °C	2.7	W
T_{stg}	Storage temperature	- 55 to 150	°C
T_j	Max. operating junction temperature	150	°C

Notes:

(1)Pulse width limited by safe operating area

Table 3: Thermal data

Symbol	Parameter	Value	Unit
$R_{thj\text{-}pcb}$ (1)	Thermal resistance junction-pcb max	47	°C/W

Notes:

(1)When mounted on 1inch² FR-4 board, 2 oz Cu



For the P-channel Power MOSFET the actual polarity of the voltages and the current must be reversed.

2 Electrical characteristics

(T_C= 25 °C unless otherwise specified)

Table 4: On /off states

Symbol	Parameter	Test conditions	Min.	Typ.	Max.	Unit
$V_{(BR)DSS}$	Drain-source breakdown voltage	V_{GS}= 0, I_D= 250 µA	20			V
I_{DSS}	Zero gate voltage drain current	V_{GS}= 0, V_{DS}= 20 V			1	µA
I_{GSS}	Gate-body leakage current	V_{DS}= 0, V_{GS}= ± 5 V			± 5	µA
$V_{GS(th)}$	Gate threshold voltage	V_{DS}= V_{GS}, I_D= 250 µA	0.4		1	V
$R_{DS(on)}$	Static drain-source on-resistance	V_{GS}= 4.5 V, I_D= 4.5 A		0.0195	0.0225	Ω
		V_{GS}= 2.5 V, I_D= 4.5 A		0.02	0.025	Ω
		V_{GS}= 1.8 V, I_D= 4.5 A		0.036	0.043	Ω
		V_{GS}= 1.5 V, I_D= 4.5 A		0.05	0.085	Ω

Table 5: Dynamic

Symbol	Parameter	Test conditions	Min.	Typ.	Max.	Unit
C_{iss}	Input capacitance	V_{GS}= 0, V_{DS}= 16 V, f = 1 MHz	-	2390	-	pF
C_{oss}	Output capacitance		-	220	-	pF
C_{rss}	Reverse transfer capacitance		-	188	-	pF
Q_g	Total gate charge	V_{DD}= 16 V, I_D= 9 A, V_{GS}= 4.5 V	-	22	-	nC
Q_{gs}	Gate-source charge		-	4.2	-	nC
Q_{gd}	Gate-drain charge		-	3.6	-	nC

Table 6: Switching times

Symbol	Parameter	Test conditions	Min.	Typ.	Max	Unit
$t_{d(on)}$	Turn-on delay time	V_{DD}= 16 V, I_D= 9 A, R_G= 1 Ω, V_{GS}= 4.5 V	-	12.5	-	ns
t_r	Rise time		-	30.5	-	ns
$t_{d(off)}$	Turn-off delay time		-	128	-	ns
t_f	Fall time		-	84.5	-	ns

Table 7: Source drain diode

Symbol	Parameter	Test conditions	Min.	Typ.	Max.	Unit
V_{SD} *(1)*	Forward on voltage	V_{GS}= 0, I_{SD}= 1 A	-		1	V
t_{rr}	Reverse recovery time	V_{DD}= 16 V di/dt = 100 A/µs, I_{SD}= 1 A	-	15.8		ns
Q_{rr}	Reverse recovery charge		-	5.9		nC
I_{RRM}	Reverse recovery current		-	0.7		A

Notes:

(1)Pulsed: pulse duration = 300 µs, duty cycle 1.5%



For the P-channel Power MOSFET the actual polarity of the voltages and the current must be reversed.

2.1 Electrical characteristics (curves)

Figure 2: Safe operating area

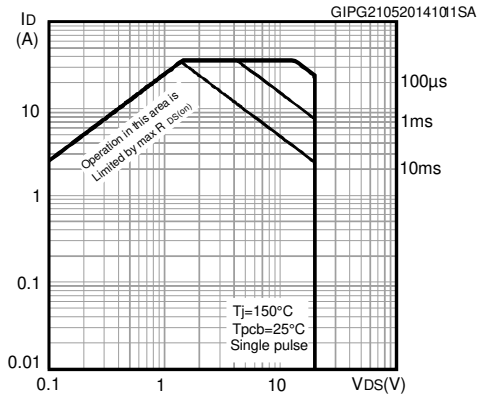

Figure 3: Thermal impedance

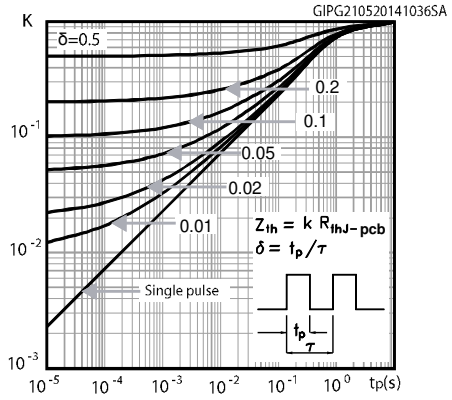

Figure 4: Output characteristics

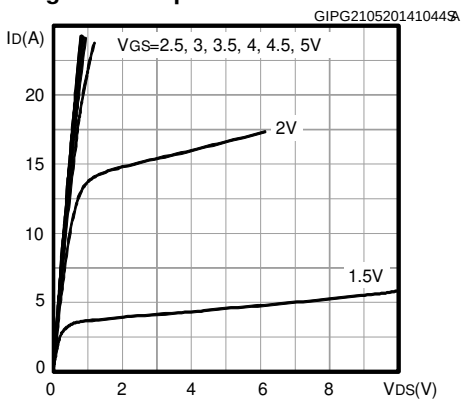

Figure 5: Transfer characteristics

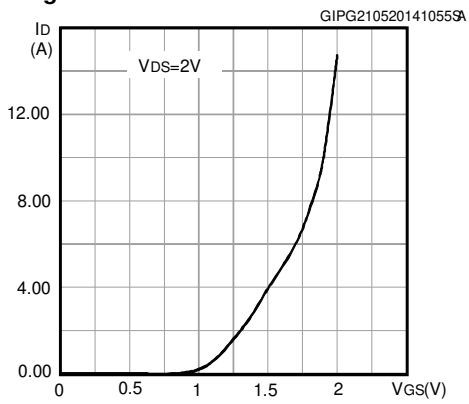

Figure 6: Gate charge vs gate-source voltage

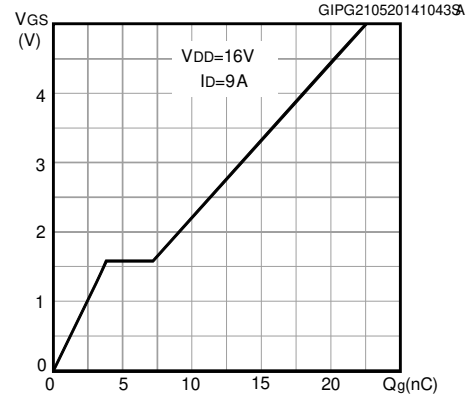

Figure 7: Static drain-source on-resistance

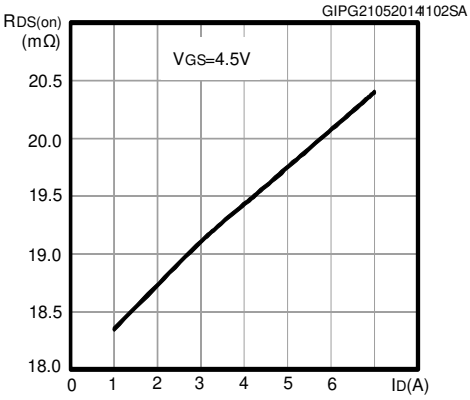

Figure 8: Capacitance variations

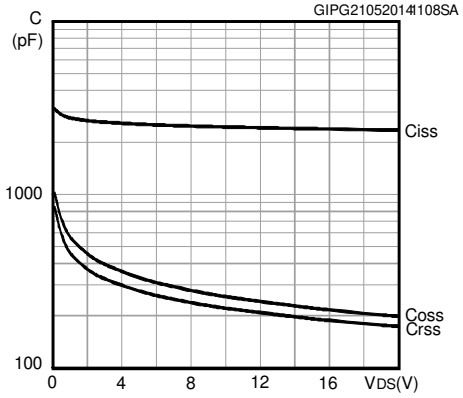

Figure 9: Normalized gate threshold voltage vs temperature

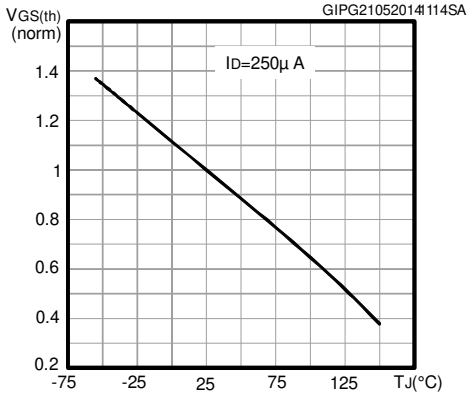

Figure 10: Normalized on-resistance vs temperature

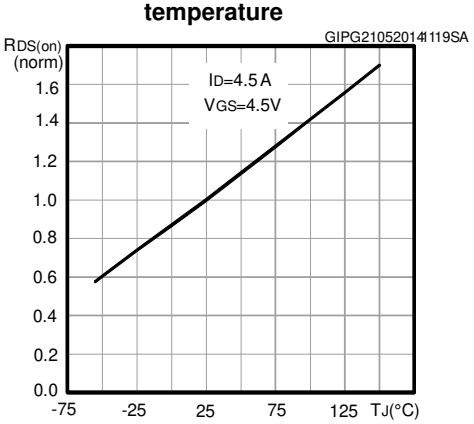

Figure 11: Normalized V(BR)DSS vs temperature

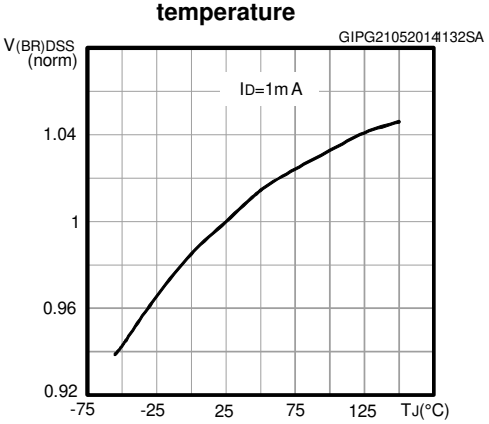

Figure 12: Source-drain diode forward characteristics

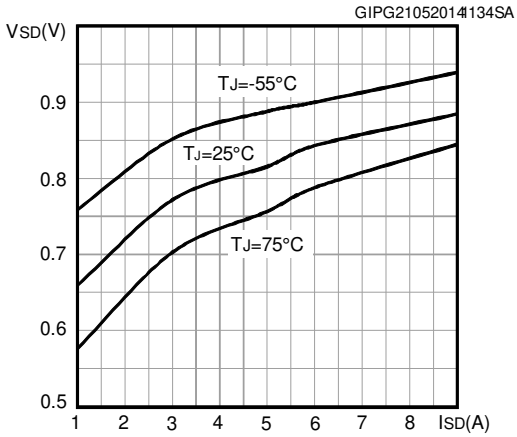

3 Test circuits

Figure 13: Switching times test circuit for resistive load

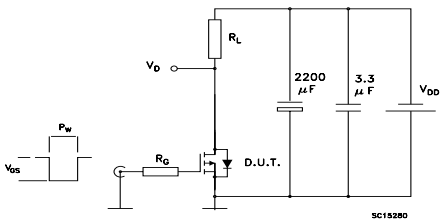

Figure 14: Gate charge test circuit

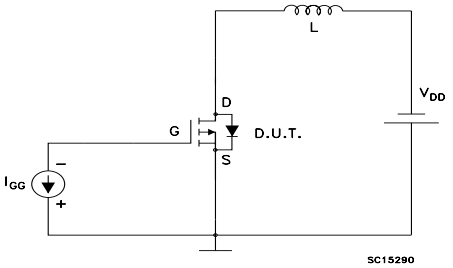

Figure 15: Test circuit for inductive load switching and diode recovery times

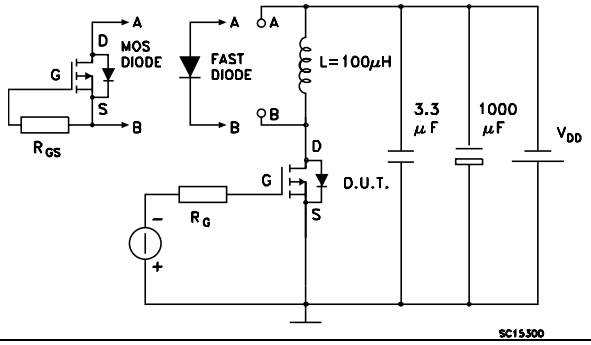

4 Package mechanical data

In order to meet environmental requirements, ST offers these devices in different grades of ECOPACK® packages, depending on their level of environmental compliance. ECOPACK® specifications, grade definitions and product status are available at: ***www.st.com***. ECOPACK® is an ST trademark.

4.1 SO-8 package mechanical data

Figure 16: SO-8 drawing

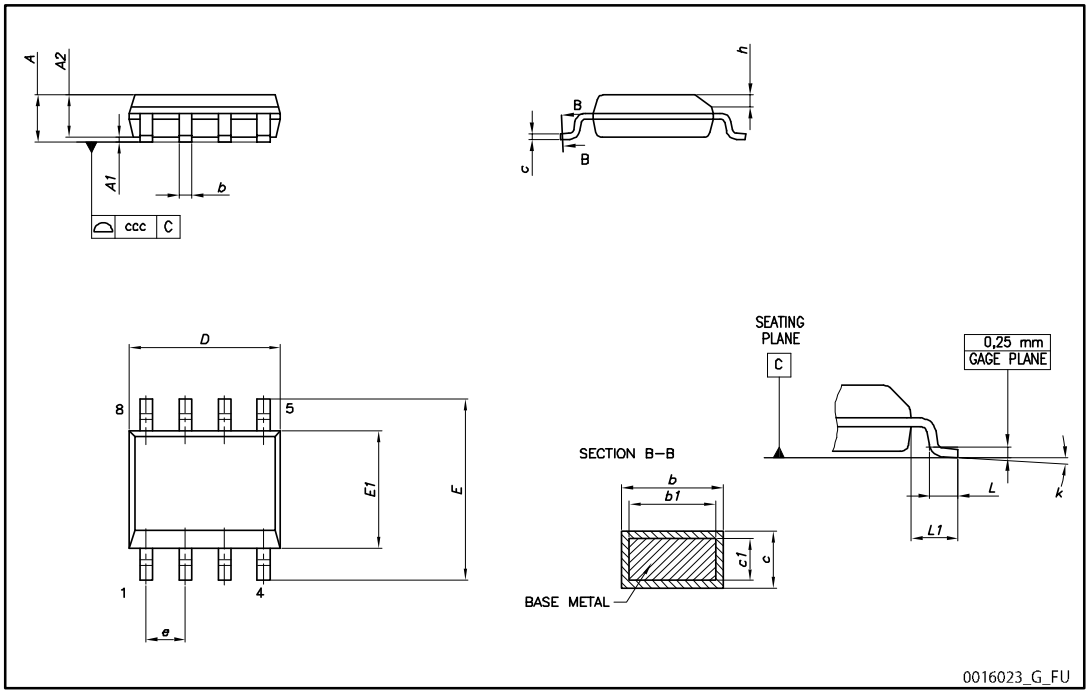

Table 8: SO-8 mechanical data

Dim.	mm		
	Min.	**Typ.**	**Max.**
A			1.75
A1	0.10		0.25
A2	1.25		
b	0.31		0.51
b1	0.28		0.48
c	0.10		0.25
c1	0.10		0.23
D	4.80	4.90	5.00
E	5.80	6.00	6.20
E1	3.80	3.90	4.00
e		1.27	
h	0.25		0.50
L	0.40		1.27
L1		1.04	
L2		0.25	
k	0°		8°
ccc			0.10

Figure 17: SO-8 recommended footprint

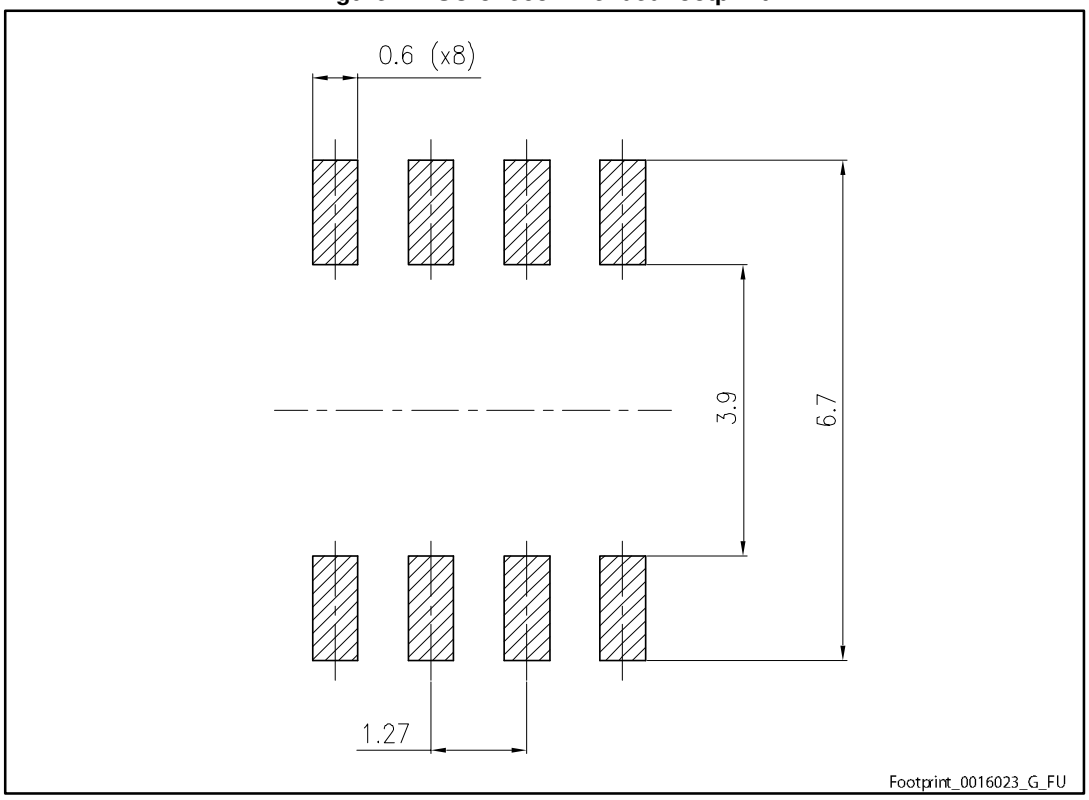

5 Packaging mechanical data

In order to meet environmental requirements, ST offers these devices in different grades of ECOPACK® packages, depending on their level of environmental compliance. ECOPACK® specifications, grade definitions and product status are available at: ***www.st.com***. ECOPACK® is an ST trademark.

5.1 SO-8 tape and reel mechanical data

Figure 18: SO-8 tape and reel dimensions

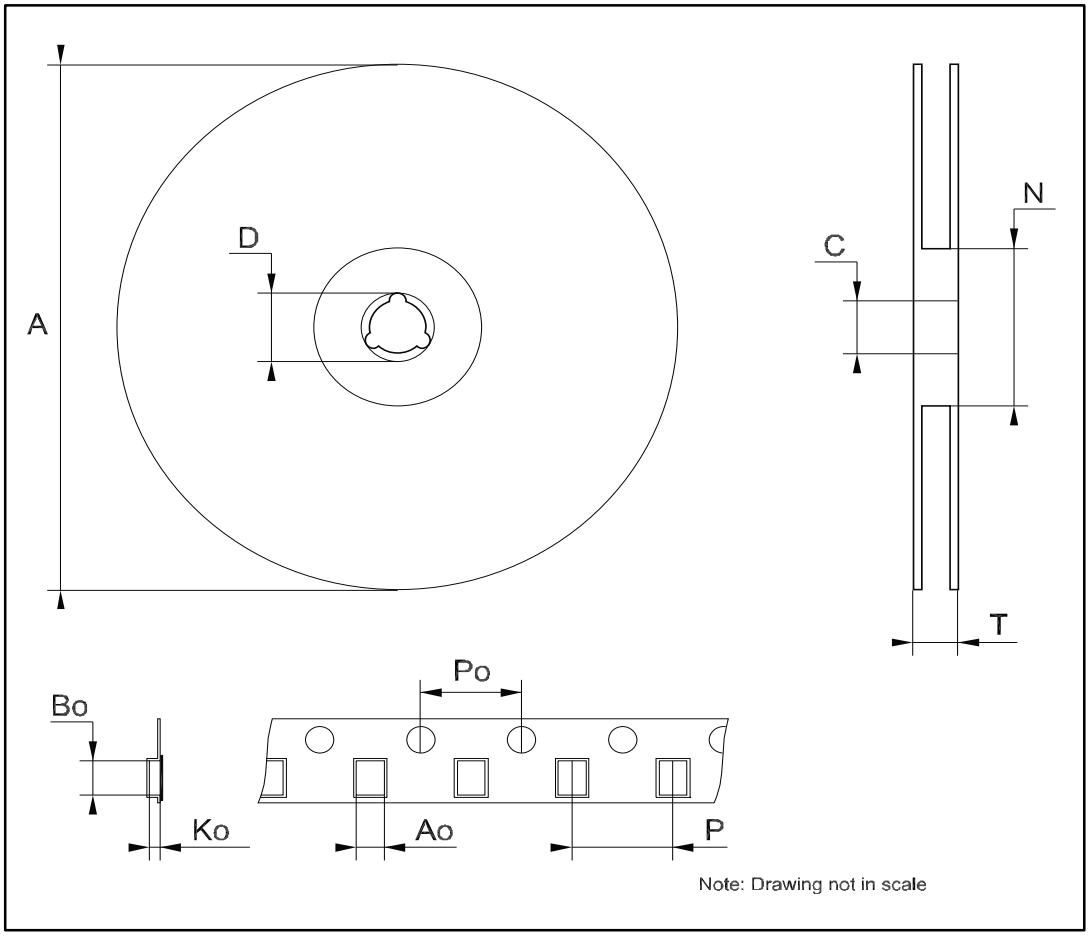

Table 9: SO-8 tape and reel mechanical data

Dim.	mm		
	Min.	**Typ.**	**Max.**
A		-	330
C	12.8	-	13.2
D	20.2	-	
N	60	-	
T		-	22.4
Ao	8.1	-	8.5
Bo	5.5	-	5.9
Ko	2.1	-	2.3
Po	3.9	-	4.1
P	7.9	-	8.1

6 Revision history

Table 10: Document revision history

Date	Revision	Changes
27-Aug-2013	1	First release.
04-Jun-2014	2	Document status promoted from preliminary data to production data Modified: title Modified: $R_{DS(on)}$ max value in cover page Modified: $R_{DS(on)}$ (typical and maximum) values in *Table 4: "On /off states"* Modified: the entire typical values in *Table 5: "Dynamic"*, *Table 6: "Switching times"* and *Table 7: "Source drain diode"* Added: *Section 8.1: "Electrical characteristics (curves)"* Minor text changes
12-Jan-2015	3	Updated title, features and description in cover page. Updated *Figure 3: "Thermal impedance"*.

IMPORTANT NOTICE – PLEASE READ CAREFULLY

STMicroelectronics NV and its subsidiaries (“ST”) reserve the right to make changes, corrections, enhancements, modifications, and improvements to ST products and/or to this document at any time without notice. Purchasers should obtain the latest relevant information on ST products before placing orders. ST products are sold pursuant to ST’s terms and conditions of sale in place at the time of order acknowledgement.

Purchasers are solely responsible for the choice, selection, and use of ST products and ST assumes no liability for application assistance or the design of Purchasers’ products.

No license, express or implied, to any intellectual property right is granted by ST herein.

Resale of ST products with provisions different from the information set forth herein shall void any warranty granted by ST for such product.

ST and the ST logo are trademarks of ST. All other product or service names are the property of their respective owners.

Information in this document supersedes and replaces information previously supplied in any prior versions of this document.

© 2015 STMicroelectronics – All rights reserved