STM32F302x6 STM32F302x8

Arm® Cortex®-M4 32-bit MCU+FPU, up to 64 KB Flash, 16 KB SRAM, ADC, DAC, USB, CAN, COMP, Op-Amp, 2.0 - 3.6 V

Datasheet - production data

Features

- Core: Arm® 32-bit Cortex®-M4 CPU with FPU (72 MHz max.), single-cycle multiplication and HW division, DSP instruction
- Memories
  - 32 to 64 Kbytes of Flash memory
  - 16 Kbytes of SRAM on data bus
- CRC calculation unit
- Reset and power management
  - V_{DD}, V_{DDA} voltage range: 2.0 to 3.6 V
  - Power-on/Power down reset (POR/PDR)
  - Programmable voltage detector (PVD)
  - Low-power: Sleep, Stop, and Standby
  - V_{BAT} supply for RTC and backup registers
- Clock management
  - 4 to 32 MHz crystal oscillator
  - 32 kHz oscillator for RTC with calibration
  - Internal 8 MHz RC with x 16 PLL option
  - Internal 40 kHz oscillator
- Up to 51 fast I/O ports, all mappable on external interrupt vectors, several 5 V-tolerant
- Interconnect matrix
- 7-channel DMA controller supporting timers, ADCs, SPIs, I^2Cs, USARTs and DAC
- 1 × ADC 0.20 µs (up to 15 channels) with selectable resolution of 12/10/8/6 bits, 0 to 3.6 V conversion range, single ended/differential mode, separate analog supply from 2.0 to 3.6 V
- Temperature sensor
- 1 x 12-bit DAC channel with analog supply from 2.4 to 3.6 V
- Three fast rail-to-rail analog comparators with analog supply from 2.0 to 3.6 V
- 1 x operational amplifier that can be used in PGA mode, all terminal accessible with analog supply from 2.4 to 3.6 V

LQFP48 (7x7 mm)
LQFP64 (10x10 mm)

UFQFPN32
(5x5 mm)

WLCSP49
(3.417x3.151 mm)

- Up to 18 capacitive sensing channels supporting touchkey, linear and rotary sensors
- Up to 9 timers
  - One 32-bit timer with up to 4 IC/OC/PWM or pulse counter and quadrature (incremental) encoder input
  - One 16-bit 6-channel advanced-control timer, with up to 6 PWM channels, deadtime generation and emergency stop
  - Three 16-bit timers with IC/OC/OCN or PWM, deadtime gen. and emergency stop
  - One 16-bit basic timer to drive the DAC
  - 2 watchdog timers (independent, window)
  - SysTick timer: 24-bit downcounter
- Calendar RTC with alarm, periodic wakeup from Stop/Standby
- Communication interfaces
  - Three I2Cs with 20 mA current sink to support Fast mode plus
  - Up to 3 USARTs, 1 with ISO 7816 I/F, auto baudrate detect and Dual clock domain
  - Up to two SPIs with multiplexed full duplex I2S
  - USB 2.0 full-speed interface
  - 1 x CAN interface (2.0B Active)
  - Infrared transmitter
- Serial wire debug (SWD), JTAG
- 96-bit unique ID

Table 1. Device summary

Reference	Part number
STM32F302x6	STM32F302R6, STM32F302C6, STM32F302K6
STM32F302x8	STM32F302R8, STM32F302C8, STM32F302K8

This is information on a product in full production. www.st.com

Contents

1 Introduction 8

2 Description 9

3 Functional overview 12

3.1 Arm® Cortex®-M4 core with FPU, embedded Flash and SRAM 12

3.2 Memories 12

3.2.1 Embedded Flash memory 12

3.2.2 Embedded SRAM 12

3.3 Boot modes 12

3.4 Cyclic redundancy check calculation unit (CRC) 13

3.5 Power management 13

3.5.1 Power supply schemes 13

3.5.2 Power supply supervisor 13

3.5.3 Voltage regulator 14

3.5.4 Low-power modes 14

3.6 Interconnect matrix 14

3.7 Clocks and startup 16

3.8 General-purpose inputs/outputs (GPIOs) 18

3.9 Direct memory access (DMA) 18

3.10 Interrupts and events 18

3.10.1 Nested vectored interrupt controller (NVIC) 18

3.11 Fast analog-to-digital converter (ADC) 19

3.11.1 Temperature sensor 19

3.11.2 Internal voltage reference (V_{REFINT}) 19

3.11.3 V_{BAT} battery voltage monitoring 20

3.12 Digital-to-analog converter (DAC) 20

3.13 Operational amplifier (OPAMP) 20

3.14 Ultra-fast comparators (COMP) 21

3.15 Timers and watchdogs 21

3.15.1 Advanced timer (TIM1) 22

3.15.2 General-purpose timers (TIM2, TIM15, TIM16, TIM17) 22

3.15.3 Basic timer (TIM6) 23

3.15.4 Independent watchdog (IWDG) . . . 23
3.15.5 Window watchdog (WWDG) . . . 23
3.15.6 SysTick timer . . . 23
3.16 Real-time clock (RTC) and backup registers . . . 23
3.17 Inter-integrated circuit interfaces (I^2C) . . . 25
3.18 Universal synchronous/asynchronous receiver transmitter (USART) . . . 26
3.19 Serial peripheral interfaces (SPI)/Inter-integrated sound interfaces (I2S) . . . 26
3.20 Controller area network (CAN) . . . 27
3.21 Universal serial bus (USB) . . . 27
3.22 Touch sensing controller (TSC) . . . 27
3.23 Infrared transmitter . . . 29
3.24 Development support . . . 30
3.24.1 Serial wire JTAG debug port (SWJ-DP) . . . 30

4 Pinouts and pin description . . . 31

5 Memory mapping . . . 48

6 Electrical characteristics . . . 52
6.1 Parameter conditions . . . 52
6.1.1 Minimum and maximum values . . . 52
6.1.2 Typical values . . . 52
6.1.3 Typical curves . . . 52
6.1.4 Loading capacitor . . . 52
6.1.5 Pin input voltage . . . 52
6.1.6 Power supply scheme . . . 53
6.1.7 Current consumption measurement . . . 54
6.2 Absolute maximum ratings . . . 55
6.3 Operating conditions . . . 57
6.3.1 General operating conditions . . . 57
6.3.2 Operating conditions at power-up / power-down . . . 58
6.3.3 Embedded reset and power control block characteristics . . . 58
6.3.4 Embedded reference voltage . . . 60
6.3.5 Supply current characteristics . . . 60
6.3.6 Wakeup time from low-power mode . . . 72

6.3.7 External clock source characteristics 73
6.3.8 Internal clock source characteristics 79
6.3.9 PLL characteristics 80
6.3.10 Memory characteristics 82
6.3.11 EMC characteristics 83
6.3.12 Electrical sensitivity characteristics 84
6.3.13 I/O current injection characteristics 85
6.3.14 I/O port characteristics 86
6.3.15 NRST pin characteristics 91
6.3.16 Timer characteristics 92
6.3.17 Communications interfaces 94
6.3.18 ADC characteristics 102
6.3.19 DAC electrical specifications 111
6.3.20 Comparator characteristics 112
6.3.21 Operational amplifier characteristics 114
6.3.22 Temperature sensor characteristics 117
6.3.23 V_{BAT} monitoring characteristics 117

7 Package information 118
7.1 WLCSP49 package information 119
7.2 LQFP64 package information 122
7.3 LQFP48 package information 125
7.4 UFQFPN32 package information 129
7.5 Thermal characteristics 132
7.5.1 Reference document 132
7.5.2 Selecting the product temperature range 133

8 Ordering information 135

9 Revision history 136

List of tables

Table 1. Device summary . . . 1
Table 2. STM32F302x6/8 device features and peripheral counts . . . 10
Table 3. External analog supply values for analog peripherals . . . 13
Table 4. STM32F302x6/8 peripheral interconnect matrix . . . 15
Table 5. Timer feature comparison . . . 21
Table 6. Comparison of I2C analog and digital filters . . . 25
Table 7. STM32F302x6/8 I^2C implementation . . . 25
Table 8. USART features . . . 26
Table 9. STM32F302x6/8 SPI/I2S implementation . . . 27
Table 10. Capacitive sensing GPIOs available on STM32F302x6/8 devices . . . 28
Table 11. No. of capacitive sensing channels available on STM32F302x6/8 devices . . . 28
Table 12. Legend/abbreviations used in the pinout table . . . 34
Table 13. STM32F302x6/8 pin definitions . . . 35
Table 14. Alternate functions for Port A . . . 42
Table 15. Alternate functions for Port B . . . 44
Table 16. Alternate functions for Port C . . . 46
Table 17. Alternate functions for Port D . . . 47
Table 18. Alternate functions for Port F . . . 47
Table 19. STM32F302x6 STM32F302x8 peripheral register boundary addresses . . . 49
Table 20. Voltage characteristics . . . 55
Table 21. Current characteristics . . . 56
Table 22. Thermal characteristics . . . 56
Table 23. General operating conditions . . . 57
Table 24. Operating conditions at power-up / power-down . . . 58
Table 25. Embedded reset and power control block characteristics . . . 58
Table 26. Programmable voltage detector characteristics . . . 59
Table 27. Embedded internal reference voltage . . . 60
Table 28. Internal reference voltage calibration values . . . 60
Table 29. Typical and maximum current consumption from VDD supply at VDD = 3.6V . . . 61
Table 30. Typical and maximum current consumption from the V_{DDA} supply . . . 63
Table 31. Typical and maximum V_{DD} consumption in Stop and Standby modes . . . 63
Table 32. Typical and maximum V_{DDA} consumption in Stop and Standby modes . . . 64
Table 33. Typical and maximum current consumption from V_{BAT} supply . . . 64
Table 34. Typical current consumption in Run mode, code with data processing running from Flash 66
Table 35. Typical current consumption in Sleep mode, code running from Flash or RAM . . . 67
Table 36. Switching output I/O current consumption . . . 69
Table 37. Peripheral current consumption . . . 71
Table 38. Low-power mode wakeup timings . . . 72
Table 39. High-speed external user clock characteristics . . . 73
Table 40. Low-speed external user clock characteristics . . . 74
Table 41. HSE oscillator characteristics . . . 75
Table 42. LSE oscillator characteristics (f_{LSE} = 32.768 kHz) . . . 77
Table 43. HSI oscillator characteristics . . . 79
Table 44. LSI oscillator characteristics . . . 80
Table 45. PLL characteristics . . . 81
Table 46. Flash memory characteristics . . . 82

Table 47. Flash memory endurance and data retention . . . 82
Table 48. EMS characteristics . . . 83
Table 49. EMI characteristics . . . 84
Table 50. ESD absolute maximum ratings . . . 84
Table 51. Electrical sensitivities . . . 85
Table 52. I/O current injection susceptibility . . . 85
Table 53. I/O static characteristics . . . 86
Table 54. Output voltage characteristics . . . 89
Table 55. I/O AC characteristics . . . 90
Table 56. NRST pin characteristics . . . 91
Table 57. TIMx characteristics . . . 92
Table 58. IWDG min/max timeout period at 40 kHz (LSI) . . . 93
Table 59. WWDG min/max timeout value @72 MHz (PCLK) . . . 93
Table 60. I2C analog filter characteristics . . . 94
Table 61. SPI characteristics . . . 95
Table 62. I2S characteristics . . . 97
Table 63. USB startup time . . . 100
Table 64. USB DC electrical characteristics . . . 100
Table 65. USB: Full-speed electrical characteristics . . . 100
Table 66. ADC characteristics . . . 102
Table 67. Maximum ADC RAIN . . . 104
Table 68. ADC accuracy - limited test conditions . . . 106
Table 69. ADC accuracy . . . 108
Table 70. ADC accuracy . . . 109
Table 71. DAC characteristics . . . 111
Table 72. Comparator characteristics . . . 112
Table 73. Operational amplifier characteristics . . . 114
Table 74. TS characteristics . . . 117
Table 75. Temperature sensor calibration values . . . 117
Table 76. V_{BAT} monitoring characteristics . . . 117
Table 77. WLCSP49 mechanical data . . . 120
Table 78. WLCSP49 recommended PCB design rules (0.4 mm pitch) . . . 121
Table 79. LQFP64 mechanical data . . . 122
Table 80. LQFP48 mechanical data . . . 126
Table 81. UFQFPN32 mechanical data . . . 130
Table 82. Package thermal characteristics . . . 132
Table 83. Ordering information scheme . . . 135
Table 84. Document revision history . . . 136

List of figures

Figure 1. DS9896 block diagram . . . 11
Figure 2. Clock tree . . . 17
Figure 3. Infrared transmitter . . . 29
Figure 4. STM32F302x6/8 UFQFN32 pinout . . . 31
Figure 5. STM32F302x6/8 LQFP48 pinout . . . 31
Figure 6. STM32F302x6/8 LQFP64 pinout . . . 32
Figure 7. STM32F302x6/8 WLCSP49 ballout . . . 33
Figure 8. STM32F302x6/8 memory mapping . . . 48
Figure 9. Pin loading conditions . . . 52
Figure 10. Pin input voltage . . . 52
Figure 11. Power supply scheme . . . 53
Figure 12. Current consumption measurement scheme . . . 54
Figure 13. Typical V_{BAT} current consumption (LSE and RTC ON/LSEDRV[1:0] = ‘00) . . . 65
Figure 14. High-speed external clock source AC timing diagram . . . 73
Figure 15. Low-speed external clock source AC timing diagram . . . 74
Figure 16. Typical application with an 8 MHz crystal . . . 76
Figure 17. Typical application with a 32.768 kHz crystal . . . 78
Figure 18. HSI oscillator accuracy characterization results for soldered parts . . . 80
Figure 19. TC and TTa I/O input characteristics - CMOS port . . . 87
Figure 20. TC and TTa I/O input characteristics - TTL port . . . 87
Figure 21. Five volt tolerant (FT and FTf) I/O input characteristics - CMOS port . . . 88
Figure 22. Five volt tolerant (FT and FTf) I/O input characteristics - TTL port . . . 88
Figure 23. I/O AC characteristics definition . . . 91
Figure 24. Recommended NRST pin protection . . . 92
Figure 25. SPI timing diagram - slave mode and CPHA = 0 . . . 96
Figure 26. SPI timing diagram - slave mode and CPHA = 1(1) . . . 96
Figure 27. SPI timing diagram - master mode(1) . . . 97
Figure 28. I^2S slave timing diagram (Philips protocol)(1) . . . 99
Figure 29. I^2S master timing diagram (Philips protocol)(1) . . . 99
Figure 30. USB timings: definition of data signal rise and fall time . . . 100
Figure 31. ADC typical current consumption in single-ended and differential modes . . . 104
Figure 32. ADC accuracy characteristics . . . 110
Figure 33. Typical connection diagram using the ADC . . . 110
Figure 34. 12-bit buffered /non-buffered DAC . . . 112
Figure 35. Maximum V_{REFINT} scaler startup time from power down . . . 113
Figure 36. OPAMP voltage noise versus frequency . . . 116
Figure 37. WLCSP49 outline . . . 119
Figure 38. WLCSP49 recommended footprint . . . 120
Figure 39. WLCSP49 marking example (package top view) . . . 121
Figure 40. LQFP64 outline . . . 122
Figure 41. LQFP64 recommended footprint . . . 123
Figure 42. LQFP64 marking example (package top view) . . . 124
Figure 43. LQFP48 outline . . . 125
Figure 44. LQFP48 recommended footprint . . . 127
Figure 45. LQFP48 marking example (package top view) . . . 128
Figure 46. UFQFPN32 outline . . . 129
Figure 47. UFQFPN32 recommended footprint . . . 130
Figure 48. UFQFPN32 marking example (package top view) . . . 131

1 Introduction

This document applies to the STM32F302x6/8 advanced Arm®[a]-based 32-bit MCUs microcontrollers.

This datasheet provides the ordering information and mechanical device characteristics of the STM32F302x6/8 microcontrollers and should be read in conjunction with the STM32F302xB/C/D/E and STM32F302x6/8 advanced Arm® -based 32-bit MCUs reference manual (RM0365). The reference manual is available from the STMicroelectronics website *www.st.com*.

For information on the Arm® Cortex®-M4 core, refer to the Cortex®-M4 Technical Reference Manual, available from Arm website www.arm.com.

a. Arm is a registered trademark of Arm Limited (or its subsidiaries) in the US and/or elsewhere.

2 Description

The STM32F302x6/8 family is based on the high-performance Arm® Cortex®-M4 32-bit RISC core operating at a frequency of up to 72 MHz and embedding a floating point unit (FPU). The family incorporates high-speed embedded memories (up to 64 Kbytes of Flash memory, 16 Kbytes of SRAM), and an extensive range of enhanced I/Os and peripherals connected to two APB buses.

The devices offer a fast 12-bit ADC (5 Msps), three comparators, an operational amplifier, up to 18 capacitive sensing channels, one DAC channel, a low-power RTC, one general-purpose 32-bit timer, one timer dedicated to motor control, and up to three general-purpose 16-bit timers, and one timer to drive the DAC. They also feature standard and advanced communication interfaces: three I^2Cs, up to three USARTs, up to two SPIs with multiplexed full-duplex I2S, a USB FS device, a CAN, and an infrared transmitter.

The STM32F302x6/8 family operates in the –40 to +85°C and –40 to +105°C temperature ranges from at a 2.0 to 3.6 V power supply. A comprehensive set of power-saving mode allows the design of low-power applications.

The STM32F302x6/8 family offers devices in 32-, 48-, 49- and 64-pin packages.

The set of included peripherals changes with the device chosen.

Table 2. STM32F302x6/8 device features and peripheral counts

Peripheral		STM32F302Kx		STM32F302Cx		STM32F302Rx	
Flash (Kbytes)		32	64	32	64	32	64
SRAM (Kbytes)		16					
Timers	Advanced control	1 (16-bit)					
	General purpose	3 (16-bit) 1 (32 bit)					
	Basic	1					
	SysTick timer	1					
	Watchdog timers (independent, window)	2					
	PWM channels (all)(1)	16		18			
	PWM channels (except complementary)	10		12			
Comm. interfaces	SPI/I2S	2					
	I^2C	3					
	USART	2		3			
	USB 2.0 FS	1					
	CAN 2.0B	1					
GPIOs	Normal I/Os (TC, TTa)	9		20		26	
	5-Volt tolerant I/Os (FT, FT1)	15		17		25	
DMA channels		7					
Capacitive sensing channels		13		17		18	
12-bit ADC Number of channels		1 8		1 11		1 15	
12-bit DAC channels		1					
Analog comparator		2		3		3	
Operational amplifier		1					
CPU frequency		72 MHz					
Operating voltage		2.0 to 3.6 V					
Operating temperature		Ambient operating temperature: - 40 to 85 °C / - 40 to 105 °C Junction temperature: - 40 to 125 °C					
Packages		UFQFPN32		LQFP48, WLCSP49		LQFP64	

1. This total number considers also the PWMs generated on the complementary output channels.

Figure 1. DS9896 block diagram

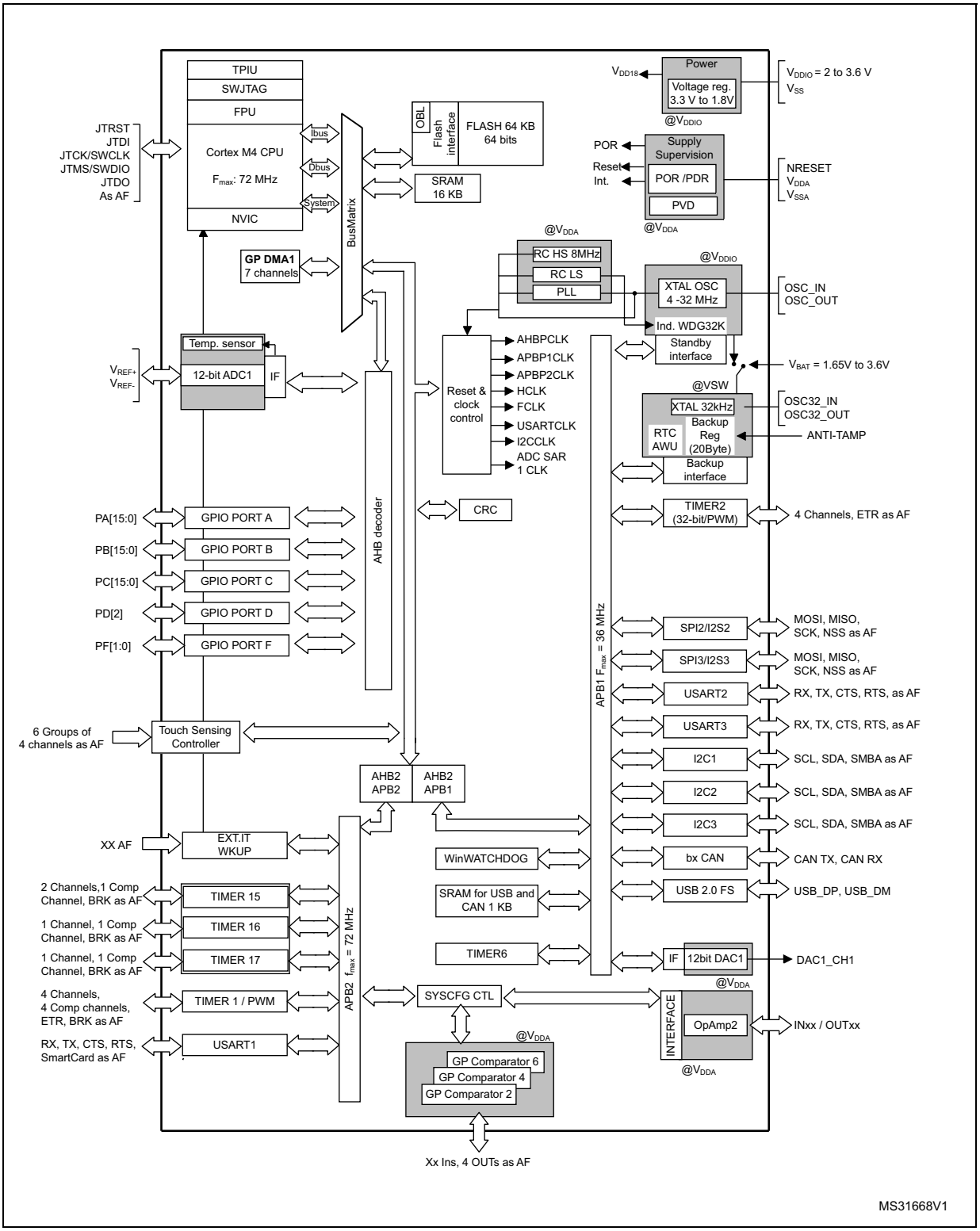

1. AF: alternate function on I/O pins.

3 Functional overview

3.1 Arm® Cortex®-M4 core with FPU, embedded Flash and SRAM

The Arm® Cortex®-M4 processor with FPU is the latest generation of Arm processors for embedded systems. It was developed to provide a low-cost platform that meets the needs of MCU implementation, with a reduced pin count and low-power consumption, while delivering outstanding computational performance and an advanced response to interrupts.

The Arm® Cortex®-M4 32-bit RISC processor with FPU features exceptional code-efficiency, delivering the high-performance expected from an Arm core in the memory size usually associated with 8- and 16-bit devices.

The processor supports a set of DSP instructions which allow efficient signal processing and complex algorithm execution. Its single-precision FPU speeds up software development by using metalanguage development tools while avoiding saturation.

With its embedded Arm core, the STM32F302x6/8 family is compatible with all Arm tools and software.

Figure 1 shows the general block diagram of the STM32F302x6/8 family devices.

3.2 Memories

3.2.1 Embedded Flash memory

All STM32F302x6/8 devices feature up to 64 Kbytes of embedded Flash memory available for storing programs and data. The Flash memory access time is adjusted to the CPU clock frequency (0 wait state from 0 to 24 MHz, 1 wait state from 24 to 48 MHz and 2 wait states above).

3.2.2 Embedded SRAM

STM32F302x6/8 devices feature 16 Kbytes of embedded SRAM.

3.3 Boot modes

At startup, BOOT0 pin and BOOT1 option bit are used to select one of three boot options:

- Boot from user Flash
- Boot from system memory
- Boot from embedded SRAM.

The boot loader is located in system memory. It is used to reprogram the Flash memory by using USART1 (PA9/PA10), USART2 (PA2/PA3) or USB (PA11/PA12) through DFU (device firmware upgrade).

3.4 Cyclic redundancy check calculation unit (CRC)

The CRC (cyclic redundancy check) calculation unit is used to get a CRC code using a configurable generator polynomial value and size.

Among other applications, CRC-based techniques are used to verify data transmission or storage integrity. In the scope of the EN/IEC 60335-1 standard, they offer a means of verifying the Flash memory integrity. The CRC calculation unit helps compute a signature of the software during runtime, to be compared with a reference signature generated at linktime and stored at a given memory location.

3.5 Power management

3.5.1 Power supply schemes

- V_{SS}, V_{DD} = 2.0 to 3.6 V: external power supply for I/Os and the internal regulator. It is provided externally through V_{DD} pins.
- V_{SSA}, V_{DDA} = 2.0 to 3.6 V: external analog power supply for ADC, DAC, comparators, operational amplifier, reset blocks, RCs and PLL. The minimum voltage to be applied to V_{DDA} differs from one analog peripheral to another. *Table 3* provides the summary of the V_{DDA} ranges for analog peripherals. The V_{DDA} voltage level must always be greater than or equal to the V_{DD} voltage level and must be provided first.

Table 3. External analog supply values for analog peripherals

Analog peripheral	Minimum V_{DDA} supply	Maximum V_{DDA} supply
ADC/COMP	2.0 V	3.6 V
DAC/OPAMP	2.4 V	3.6 V

- V_{BAT} = 1.65 to 3.6 V: power supply for RTC, external clock 32 kHz oscillator and backup registers (through power switch) when V_{DD} is not present.

3.5.2 Power supply supervisor

The device has an integrated power-on reset (POR) and power-down reset (PDR) circuits. They are always active, and ensure proper operation above a threshold of 2 V. The device remains in reset mode when the monitored supply voltage is below a specified threshold, $V_{POR/PDR}$, without the need for an external reset circuit.

- The POR monitors only the V_{DD} supply voltage. During the startup phase it is required that V_{DDA} should arrive first and be greater than or equal to V_{DD}.
- The PDR monitors both the V_{DD} and V_{DDA} supply voltages, however the V_{DDA} power supply supervisor can be disabled (by programming a dedicated Option bit) to reduce the power consumption if the application design ensures that V_{DDA} is higher than or equal to V_{DD}.

The device features an embedded programmable voltage detector (PVD) that monitors the V_{DD} power supply and compares it to the V_{PVD} threshold. An interrupt can be generated when V_{DD} drops below the V_{PVD} threshold and/or when V_{DD} is higher than the V_{PVD} threshold. The interrupt service routine can then generate a warning message and/or put the MCU into a safe state. The PVD is enabled by software.

3.5.3 Voltage regulator

The regulator has three operation modes: main (MR), low-power (LPR), and power-down.

- The MR mode is used in the nominal regulation mode (Run)
- The LPR mode is used in Stop mode.
- The power-down mode is used in Standby mode: the regulator output is in high impedance, and the kernel circuitry is powered down thus inducing zero consumption.

The voltage regulator is always enabled after reset. It is disabled in Standby mode.

3.5.4 Low-power modes

The STM32F302x6/8 supports three low-power modes to achieve the best compromise between low power consumption, short startup time and available wakeup sources:

- Sleep mode

  In Sleep mode, only the CPU is stopped. All peripherals continue to operate and can wake up the CPU when an interrupt/event occurs.
- Stop mode

  Stop mode achieves the lowest power consumption while retaining the content of SRAM and registers. All clocks in the 1.8 V domain are stopped, the PLL, the HSI RC and the HSE crystal oscillators are disabled. The voltage regulator can also be put either in normal or in low-power mode.

  The device can be woken up from Stop mode by any of the EXTI line. The EXTI line source can be one of the 16 external lines, the PVD output, the USB wakeup, the RTC alarm, COMPx, I2C or USARTx.
- Standby mode

  The Standby mode is used to achieve the lowest power consumption. The internal voltage regulator is switched off so that the entire 1.8 V domain is powered off. The PLL, the HSI RC and the HSE crystal oscillators are also switched off. After entering Standby mode, SRAM and register contents are lost except for registers in the Backup domain and Standby circuitry.

  The device exits Standby mode when an external reset (NRST pin), an IWDG reset, a rising edge on the WKUP pin, or an RTC alarm occurs.

Note: The RTC, the IWDG, and the corresponding clock sources are not stopped by entering Stop or Standby mode.

3.6 Interconnect matrix

Several peripherals have direct connections between them. This allows autonomous communication between peripherals, saving CPU resources thus power supply consumption. In addition, these hardware connections allow fast and predictable latency.

Table 4. STM32F302x6/8 peripheral interconnect matrix

Interconnect source	Interconnect destination	Interconnect action
TIMx	TIMx	Timers synchronization or chaining
	ADC1 DAC1	Conversion triggers
	DMA	Memory to memory transfer trigger
	Compx	Comparator output blanking
COMPx	TIMx	Timer input: OCREF_CLR input, input capture
ADC1	TIM1	Timer triggered by analog watchdog
GPIO RTCCLK HSE/32 MC0	TIM16	Clock source used as input channel for HSI and LSI calibration
CSS CPU (hard fault) COMPx PVD GPIO	TIM1 TIM15, 16, 17	Timer break
GPIO	TIMx	External trigger, timer break
	ADC1 DAC1	Conversion external trigger
DAC1	COMPx	Comparator inverting input

Note: For more details about the interconnect actions, refer to the corresponding sections in the STM32F302xx and STM32F302x6/8 *reference manual RM0365.*

3.7 Clocks and startup

System clock selection is performed on startup, however the internal RC 8 MHz oscillator is selected as default CPU clock on reset. An external 4-32 MHz clock can be selected, in which case it is monitored for failure. If failure is detected, the system automatically switches back to the internal RC oscillator. A software interrupt is generated if enabled. Similarly, full interrupt management of the PLL clock entry is available when necessary (for example with failure of an indirectly used external oscillator).

Several prescalers allow to configure the AHB frequency, the high speed APB (APB2) and the low speed APB (APB1) domains. The maximum frequency of the AHB and the high speed APB domains is 72 MHz, while the maximum allowed frequency of the low speed APB domain is 36 MHz.

The advanced clock controller clocks the core and all peripherals using a single crystal or oscillator. To achieve audio class performance, an audio crystal can be used.

Figure 2. Clock tree

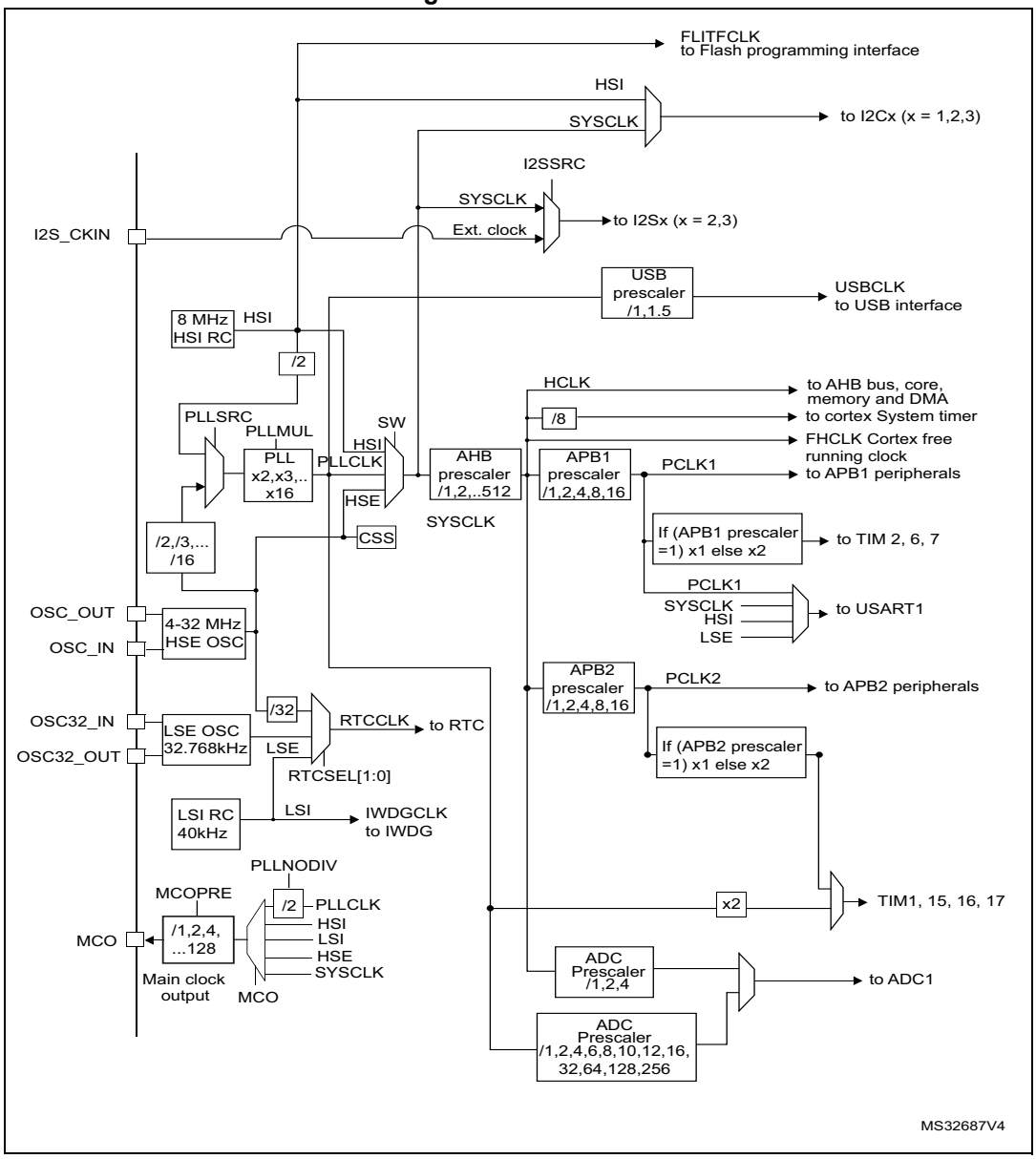

3.8 General-purpose inputs/outputs (GPIOs)

Each of the GPIO pins can be configured by software as output (push-pull or open-drain), as input (with or without pull-up or pull-down) or as peripheral alternate function. Most of the GPIO pins are shared with digital or analog alternate functions. All GPIOs are high current capable except for analog inputs.

The I/Os alternate function configuration can be locked if needed following a specific sequence in order to avoid spurious writing to the I/Os registers.

Fast I/O handling allows I/O toggling up to 36 MHz.

3.9 Direct memory access (DMA)

The flexible general-purpose DMA is able to manage memory-to-memory, peripheral-to-memory and memory-to-peripheral transfers. The DMA controller supports circular buffer management, avoiding the generation of interrupts when the controller reaches the end of the buffer.

Each of the 7 DMA channels is connected to dedicated hardware DMA requests, with software trigger support for each channel. Configuration is done by software and transfer sizes between source and destination are independent.

The DMA can be used with the main peripherals: SPI, I^2C, USART, timers, DAC and ADC.

3.10 Interrupts and events

3.10.1 Nested vectored interrupt controller (NVIC)

The STM32F302x6/8 devices embed a nested vectored interrupt controller (NVIC) able to handle up to 60 maskable interrupt channels and 16 priority levels.

The NVIC benefits are the following:

- Closely coupled NVIC gives low latency interrupt processing
- Interrupt entry vector table address passed directly to the core
- Closely coupled NVIC core interface
- Allows early processing of interrupts
- Processing of late arriving higher priority interrupts
- Support for tail chaining
- Processor state automatically saved
- Interrupt entry restored on interrupt exit with no instruction overhead.

The NVIC hardware block provides flexible interrupt management features with minimal interrupt latency.

3.11 Fast analog-to-digital converter (ADC)

An analog-to-digital converter, with selectable resolution between 12 and 6 bit, is embedded in the STM32F302x6/8 family devices. The ADC has up to 15 external channels performing conversions in single-shot or scan modes. Channels can be configured to be either single-ended input or differential input. In scan mode, automatic conversion is performed on a selected group of analog inputs.

Additional logic functions embedded in the ADC interface allow:

- Simultaneous sample and hold
- Single-shunt phase current reading techniques.

The ADC can be served by the DMA controller.

Three analog watchdogs are available. The analog watchdog feature allows very precise monitoring of the converted voltage of one, some or all selected channels. An interrupt is generated when the converted voltage is outside the programmed thresholds.

The events generated by the general-purpose timers (TIMx) and the advanced-control timer (TIM1) can be internally connected to the ADC start trigger and injection trigger, respectively, to allow the application to synchronize A/D conversion and timers.

3.11.1 Temperature sensor

The temperature sensor (TS) generates a voltage V_{SENSE} that varies linearly with temperature.

The temperature sensor is internally connected to the ADC1_IN16 input channel which is used to convert the sensor output voltage into a digital value.

The sensor provides good linearity but it has to be calibrated to obtain good overall accuracy of the temperature measurement. As the offset of the temperature sensor varies from chip to chip due to process variation, the uncalibrated internal temperature sensor is suitable for applications that detect temperature changes only.

To improve the accuracy of the temperature sensor measurement, each device is individually factory-calibrated by ST. The temperature sensor factory calibration data are stored by ST in the system memory area, accessible in read-only mode.

3.11.2 Internal voltage reference (V_{REFINT})

The internal voltage reference (V_{REFINT}) provides a stable (bandgap) voltage output for the ADC and Comparators. V_{REFINT} is internally connected to the ADC1_IN18 input channel. The precise voltage of V_{REFINT} is individually measured for each part by ST during production test and stored in the system memory area. It is accessible in read-only mode.

3.11.3 V_{BAT} battery voltage monitoring

This embedded hardware feature allows the application to measure the V_{BAT} battery voltage using the internal ADC channel ADC1_IN17. As the V_{BAT} voltage may be higher than V_{DDA}, and thus outside the ADC input range, the V_{BAT} pin is internally connected to a bridge divider by 2. As a consequence, the converted digital value is half the V_{BAT} voltage.

3.12 Digital-to-analog converter (DAC)

One 12-bit buffered DAC channel (DAC1_OUT1) can be used to convert digital signals into analog voltage signal outputs. The chosen design structure is composed of integrated resistor strings and an amplifier in inverting configuration.

This digital interface supports the following features:

- One DAC output channel
- 8-bit or 12-bit monotonic output
- Left or right data alignment in 12-bit mode
- Synchronized update capability
- Noise-wave generation
- Triangular-wave generation
- DMA capability
- External triggers for conversion.

3.13 Operational amplifier (OPAMP)

The STM32F302x6/8 devices embed one operational amplifier with external or internal follower routing and PGA capability (or even amplifier and filter capability with external components). When the operational amplifier is selected, an external ADC channel is used to enable output measurement.

The operational amplifier features:

- 8.2 MHz bandwidth
- 0.5 mA output capability
- Rail-to-rail input/output
- In PGA mode, the gain can be programmed to be 2, 4, 8 or 16.

3.14 Ultra-fast comparators (COMP)

The STM32F302x6/8 devices embed up to three ultra-fast rail-to-rail comparators which offer the features below:

- Programmable internal or external reference voltage
- Selectable output polarity.

The reference voltage can be one of the following:

- External I/O
- DAC output
- Internal reference voltage or submultiple (1/4, 1/2, 3/4). Refer to *Table 27: Embedded internal reference voltage* for the value and precision of the internal reference voltage.

All comparators can wake up from STOP mode, and also generate interrupts and breaks for the timers.

3.15 Timers and watchdogs

The STM32F302x6/8 devices include advanced control timer, up to general-purpose timers, basic timer, two watchdog timers and a SysTick timer. *Table 5* compares the features of the advanced control, general purpose and basic timers.

Table 5. Timer feature comparison

Timer type	Timer	Counter resolution	Counter type	Prescaler factor	DMA request generation	Capture/ compare Channels	Complementary outputs
Advanced control	TIM1(1)	16-bit	Up, Down, Up/Down	Any integer between 1 and 65536	Yes	4	Yes
General-purpose	TIM2	32-bit	Up, Down, Up/Down	Any integer between 1 and 65536	Yes	4	No
	TIM15(1)	16-bit	Up	Any integer between 1 and 65536	Yes	2	1
	TIM16(1), TIM17(1)	16-bit	Up	Any integer between 1 and 65536	Yes	1	1
Basic	TIM6	16-bit	Up	Any integer between 1 and 65536	Yes	0	No

1. TIM1/15/16/17 can be clocked from the PLL running at 144 MHz when the system clock source is the PLL and AHB or APB2 subsystem clocks are not divided by more than 2 cumulatively.

3.15.1 Advanced timer (TIM1)

The advanced-control timer can each be seen as a three-phase PWM multiplexed on 6 channels. They have complementary PWM outputs with programmable inserted dead-times. They can also be seen as complete general-purpose timers. The 4 independent channels can be used for:

- Input capture
- Output compare
- PWM generation (edge or center-aligned modes) with full modulation capability (0-100%)
- One-pulse mode output.

In debug mode, the advanced-control timer counter can be frozen and the PWM outputs disabled to turn off any power switches driven by these outputs.

Many features are shared with those of the general-purpose TIM timers (described in *Section 3.15.2* using the same architecture, so the advanced-control timers can work together with the TIM timers via the Timer Link feature for synchronization or event chaining.

3.15.2 General-purpose timers (TIM2, TIM15, TIM16, TIM17)

There are up to four synchronizable general-purpose timers embedded in the STM32F302x6/8 devices (see *Table 5* for differences). Each general-purpose timer can be used to generate PWM outputs, or act as a simple time base.

TIM2

TIM2 has a 32-bit auto-reload up/downcounter and 32-bit prescaler

It features 4 independent channels for input capture/output compare, PWM or one-pulse mode output. It can work together, or with the other general-purpose timers via the Timer Link feature for synchronization or event chaining.

The counter can be frozen in debug mode.

It has independent DMA request generation and supports quadrature encoders.

TIM15, TIM16 and TIM 17

These three timers general-purpose timers with mid-range features:

They have 16-bit auto-reload upcounters and 16-bit prescalers.

- TIM15 has 2 channels and 1 complementary channel
- TIM16 and TIM17 have 1 channel and 1 complementary channel

All channels can be used for input capture/output compare, PWM or one-pulse mode output.

The timers can work together via the Timer Link feature for synchronization or event chaining. The timers have independent DMA request generation.

The counters can be frozen in debug mode.

3.15.3 Basic timer (TIM6)

This timer is mainly used for DAC trigger generation. It can also be used as a generic 16-bit time base.

3.15.4 Independent watchdog (IWDG)

The independent watchdog is based on a 12-bit downcounter and 8-bit prescaler. It is clocked from an independent 40 kHz internal RC and as it operates independently from the main clock, it can operate in Stop and Standby modes. It can be used either as a watchdog to reset the device when a problem occurs, or as a free running timer for application timeout management. It is hardware or software configurable through the option byte. The counter can be frozen in debug mode.

3.15.5 Window watchdog (WWDG)

The window watchdog is based on a 7-bit downcounter that can be set as free running. It can be used as a watchdog to reset the device when a problem occurs. It is clocked from the main clock. It has an early warning interrupt capability and the counter can be frozen in debug mode.

3.15.6 SysTick timer

This timer is dedicated to real-time operating systems, but could also be used as a standard down counter. It features:

- A 24-bit down counter
- Autoreload capability
- Maskable system interrupt generation when the counter reaches 0
- Programmable clock source.

3.16 Real-time clock (RTC) and backup registers

The RTC and the 20 backup registers are supplied through a switch that takes power from either the V_{DD} supply when present or the VBAT pin. The backup registers are five 32-bit registers used to store 20 byte of user application data when V_{DD} power is not present.

They are not reset by a system or power reset, or when the device wakes up from Standby mode.

The RTC is an independent BCD timer/counter. It supports the following features:

- Calendar with subsecond, seconds, minutes, hours (12 or 24 format), week day, date, month, year, in BCD (binary-coded decimal) format.
- Automatic correction for 28, 29 (leap year), 30, and 31 days of the month.
- Two programmable alarms with wake up from Stop and Standby mode capability.
- On-the-fly correction from 1 to 32767 RTC clock pulses. This can be used to synchronize it with a master clock.
- Digital calibration circuit with 1 ppm resolution, to compensate for quartz crystal inaccuracy.
- Two anti-tamper detection pins with programmable filter. The MCU can be woken up from Stop and Standby modes on tamper event detection.
- Timestamp feature which can be used to save the calendar content. This function can be triggered by an event on the timestamp pin, or by a tamper event. The MCU can be woken up from Stop and Standby modes on timestamp event detection.
- 17-bit Auto-reload counter for periodic interrupt with wakeup from STOP/STANDBY capability.

The RTC clock sources can be:

- A 32.768 kHz external crystal
- A resonator or oscillator
- The internal low-power RC oscillator (typical frequency of 40 kHz)
- The high-speed external clock divided by 32.

3.17 Inter-integrated circuit interfaces (I^2C)

The devices feature three I^2C bus interfaces which can operate in multimaster and slave mode. Each I2C interface can support standard (up to 100 kHz), fast (up to 400 kHz) and fast mode + (up to 1 MHz) modes.

All I^2C interfaces support 7-bit and 10-bit addressing modes, multiple 7-bit slave addresses (2 addresses, 1 with configurable mask). They also include programmable analog and digital noise filters.

Table 6. Comparison of I2C analog and digital filters

	Analog filter	Digital filter
Pulse width of suppressed spikes	≥ 50 ns	Programmable length from 1 to 15 I2C peripheral clocks
Benefits	Available in Stop mode	1. Extra filtering capability vs. standard requirements. 2. Stable length
Drawbacks	Variations depending on temperature, voltage, process	Wakeup from Stop on address match is not available when digital filter is enabled.

In addition, it provides hardware support for SMBUS 2.0 and PMBUS 1.1: ARP capability, Host notify protocol, hardware CRC (PEC) generation/verification, timeouts verifications and ALERT protocol management. It also has a clock domain independent from the CPU clock, allowing the I2Cx (x=1,3) to wake up the MCU from Stop mode on address match.

The I2C interfaces can be served by the DMA controller.

Refer to *Table 7* for the features available in I2C1, I2C2 and I2C3.

Table 7. STM32F302x6/8 I^2C implementation

I2C features(1)	I2C1	I2C2	I2C3
7-bit addressing mode	X	X	X
10-bit addressing mode	X	X	X
Standard mode (up to 100 kbit/s)	X	X	X
Fast mode (up to 400 kbit/s)	X	X	X
Fast Mode Plus with 20mA output drive I/Os (up to 1 Mbit/s)	X	X	X
Independent clock	X	X	X
SMBus	X	X	X
Wakeup from STOP	X	X	X

1. X = supported.

3.18 Universal synchronous/asynchronous receiver transmitter (USART)

The STM32F302x6/8 devices have three embedded universal synchronous receiver transmitters (USART1, USART2 and USART3).

The USART interfaces are able to communicate at speeds of up to 9 Mbit/s.

All USARTs support hardware management of the CTS and RTS signals, multiprocessor communication mode, single-wire half-duplex communication mode and synchronous mode.

USART1 supports SmartCard mode, IrDA SIR ENDEC, LIN Master capability and autobaudrate detection.

All USART interfaces can be served by the DMA controller.

Refer to *Table 8* for the features available in all USARTs interfaces.

Table 8. USART features

USART modes/features(1)	USART1	USART2	USART3
Hardware flow control for modem	X	X	X
Continuous communication using DMA	X	X	X
Multiprocessor communication	X	X	X
Synchronous mode	X	X	X
SmartCard mode	X	-	-
Single-wire half-duplex communication	X	X	X
IrDA SIR ENDEC block	X	-	-
LIN mode	X	-	-
Dual clock domain and wakeup from Stop mode	X	-	-
Receiver timeout interrupt	X	-	-
Modbus communication	X	-	-
Auto baud rate detection	X	-	-
Driver Enable	X	X	X

1. X = supported.

3.19 Serial peripheral interfaces (SPI)/Inter-integrated sound interfaces (I2S)

Two SPI interfaces (SPI2 and SPI3) allow communication up to 18 Mbit/s in slave and master modes in full-duplex and simplex modes. The 3-bit prescaler gives 8 master mode frequencies and the frame size is configurable from 4 bits to 16 bits.

Two standard I2S interfaces (multiplexed with SPI2 and SPI3) are available, that can be operated in master or slave mode. These interfaces can be configured to operate with 16/32 bit resolution, as input or output channels. Audio sampling frequencies from 8 kHz up to 192 kHz are supported. When either or both of the I2S interfaces is/are configured in master

mode, the master clock can be output to the external DAC/CODEC at 256 times the sampling frequency.

Refer to *Table 9* for the features available in SPI2 and SPI3.

Table 9. STM32F302x6/8 SPI/I2S implementation

SPI features[1]	SPI2	SPI3
Hardware CRC calculation	X	X
Rx/Tx FIFO	X	X
NSS pulse mode	X	X
I2S mode	X	X
TI mode	X	X

1. X = supported.

3.20 Controller area network (CAN)

The CAN is compliant with specifications 2.0A and B (active) with a bit rate up to 1 Mbit/s. It can receive and transmit standard frames with 11-bit identifiers as well as extended frames with 29-bit identifiers. It has three transmit mailboxes, two receive FIFOs with 3 stages and 14 scalable filter banks.

3.21 Universal serial bus (USB)

The STM32F302x6 STM32F302x8 embeds a full-speed USB device peripheral compliant with the USB specification version 2.0. The USB interface implements a full-speed (12 Mbit/s) function interface with added support for USB 2.0 Link Power Management. It has software-configurable endpoint setting with packet memory up-to 1 Kbyte (the last 256 bytes are used for CAN peripheral if enabled) and suspend/resume support. It requires a precise 48 MHz clock which is generated from the internal main PLL (the clock source must use an HSE crystal oscillator).

3.22 Touch sensing controller (TSC)

The STM32F302x6/8 devices provide a simple solution for adding capacitive sensing functionality to any application. These devices offer up to 18 capacitive sensing channels distributed over 6 analog I/O groups.

Capacitive sensing technology is able to detect the presence of a finger near a sensor which is protected from direct touch by a dielectric (for example glass, plastic). The capacitive variation introduced by the finger (or any conductive object) is measured using a proven implementation based on a surface charge transfer acquisition principle. It consists of charging the sensor capacitance and then transferring a part of the accumulated charges into a sampling capacitor until the voltage across this capacitor has reached a specific threshold. To limit the CPU bandwidth usage this acquisition is directly managed by the hardware touch sensing controller and only requires few external components to operate.

Table 10. Capacitive sensing GPIOs available on STM32F302x6/8 devices

Group	Capacitive sensing signal name	Pin name
1	TSC_G1_IO1	PA0
	TSC_G1_IO2	PA1
	TSC_G1_IO3	PA2
	TSC_G1_IO4	PA3
2	TSC_G2_IO1	PA4
	TSC_G2_IO2	PA5
	TSC_G2_IO3	PA6
	TSC_G2_IO4	PA7
3	TSC_G3_IO1	PC5
	TSC_G3_IO2	PB0
	TSC_G3_IO3	PB1
	TSC_G3_IO4	PB2
4	TSC_G4_IO1	PA9
	TSC_G4_IO2	PA10
	TSC_G4_IO3	PA13
	TSC_G4_IO4	PA14
5	TSC_G5_IO1	PB3
	TSC_G5_IO2	PB4
	TSC_G5_IO3	PB6
	TSC_G5_IO4	PB7
6	TSC_G6_IO1	PB11
	TSC_G6_IO2	PB12
	TSC_G6_IO3	PB13
	TSC_G6_IO4	PB14

Table 11. No. of capacitive sensing channels available on STM32F302x6/8 devices

Analog I/O group	Number of capacitive sensing channels		
	STM32F302Rx	STM32F302Cx	STM32F302Kx
G1	3	3	3
G2	3	3	3
G3	3	2	1
G4	3	3	3
G5	3	3	3

Table 11. No. of capacitive sensing channels available on STM32F302x6/8 devices (continued)

Analog I/O group	Number of capacitive sensing channels		
	STM32F302Rx	STM32F302Cx	STM32F302Kx
G6	3	3	0
Number of capacitive sensing channels	18	17	13

3.23 Infrared transmitter

The STM32F302x6/8 devices provide an infrared transmitter solution. The solution is based on internal connections between TIM16 and TIM17 as shown in the figure below.

TIM17 is used to provide the carrier frequency and TIM16 provides the main signal to be sent. The infrared output signal is available on PB9 or PA13.

To generate the infrared remote control signals, TIM16 channel 1 and TIM17 channel 1 must be properly configured to generate correct waveforms. All standard IR pulse modulation modes can be obtained by programming the two timers output compare channels.

Figure 3. Infrared transmitter

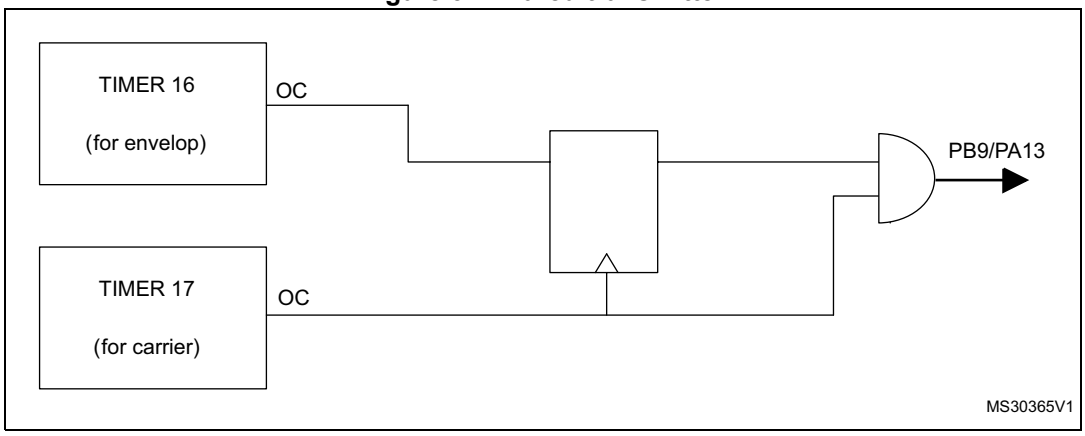

3.24 Development support

3.24.1 Serial wire JTAG debug port (SWJ-DP)

The Arm SWJ-DP Interface is embedded, and is a combined JTAG and serial wire debug port that enables either a serial wire debug or a JTAG probe to be connected to the target.

The JTAG TMS and TCK pins are shared respectively with SWDIO and SWCLK and a specific sequence on the TMS pin is used to switch between JTAG-DP and SW-DP.

4 Pinouts and pin description

Figure 4. STM32F302x6/8 UFQFN32 pinout

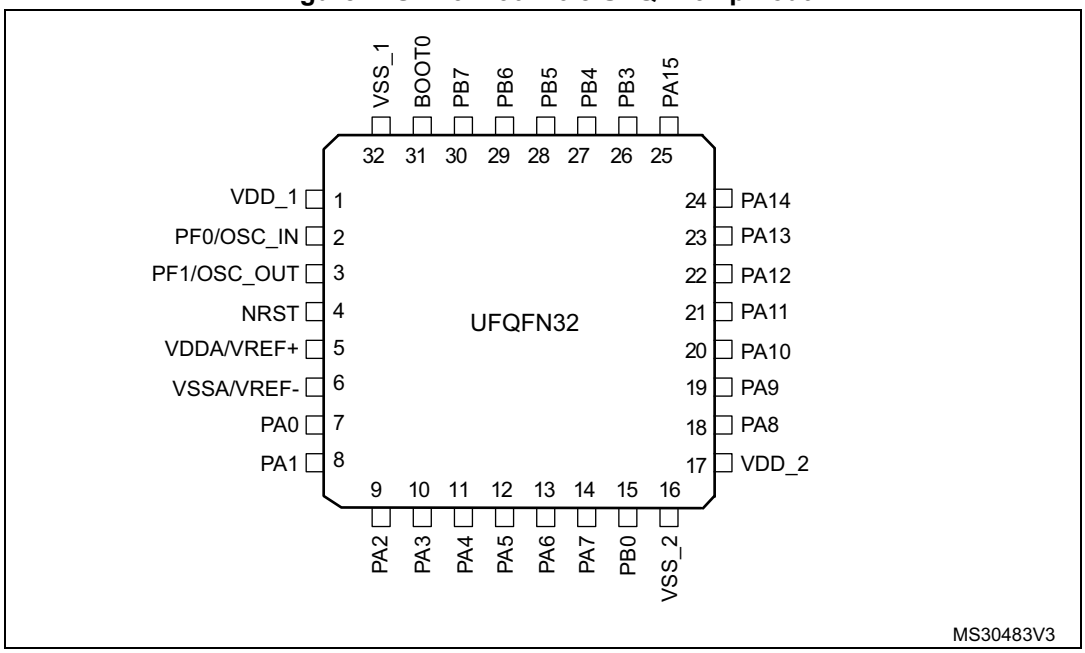

1. The above figure shows the package top view.

Figure 5. STM32F302x6/8 LQFP48 pinout

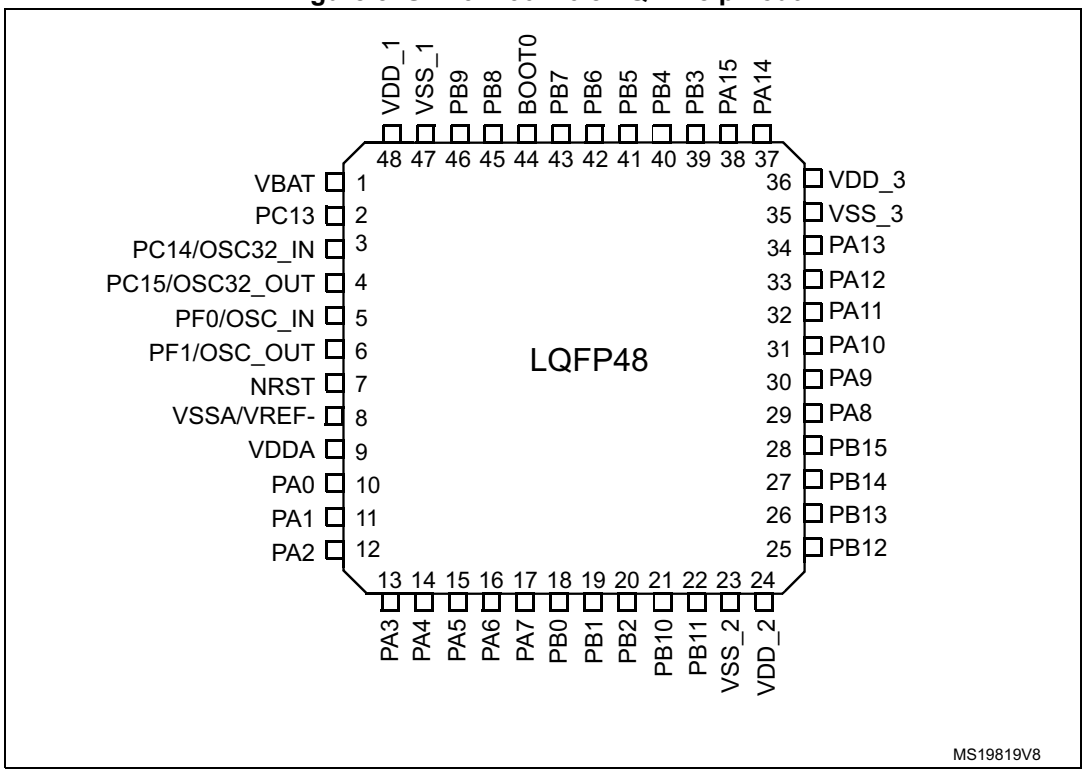

1. The above figure shows the package top view.

Figure 6. STM32F302x6/8 LQFP64 pinout

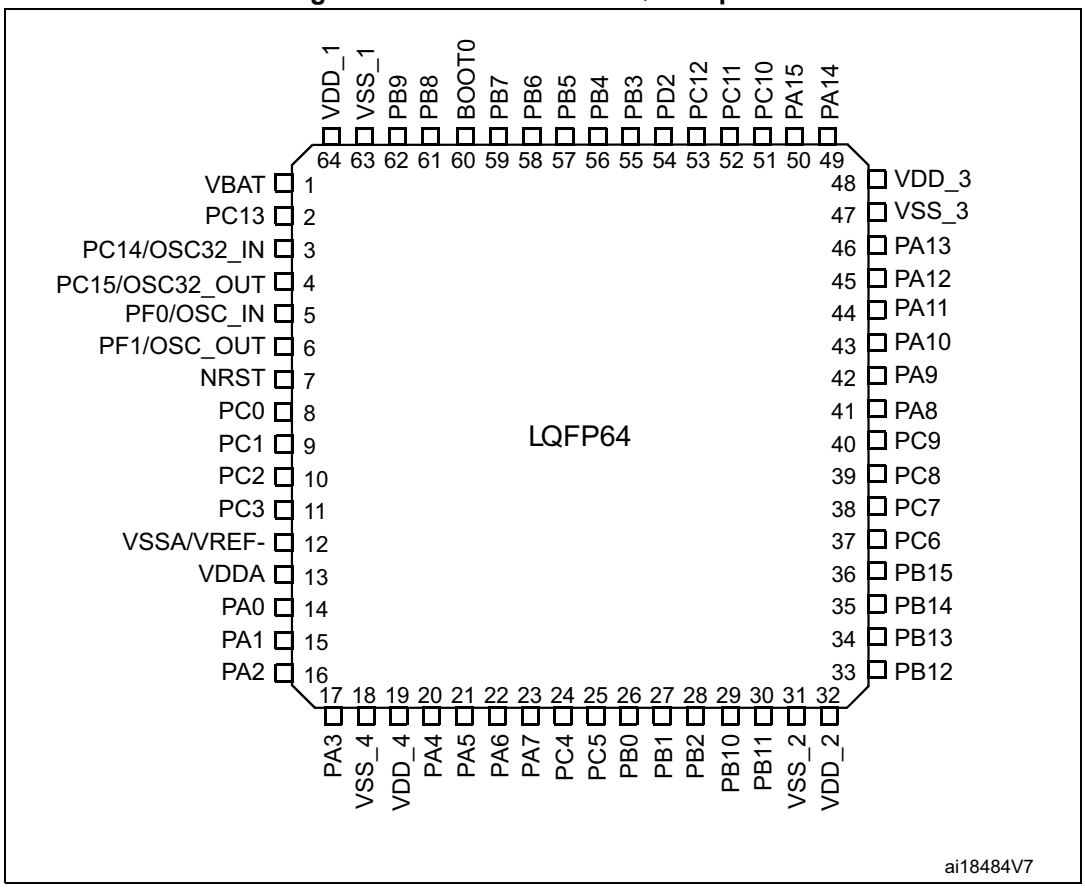

1. The above figure shows the package top view.

Figure 7. STM32F302x6/8 WLCSP49 ballout

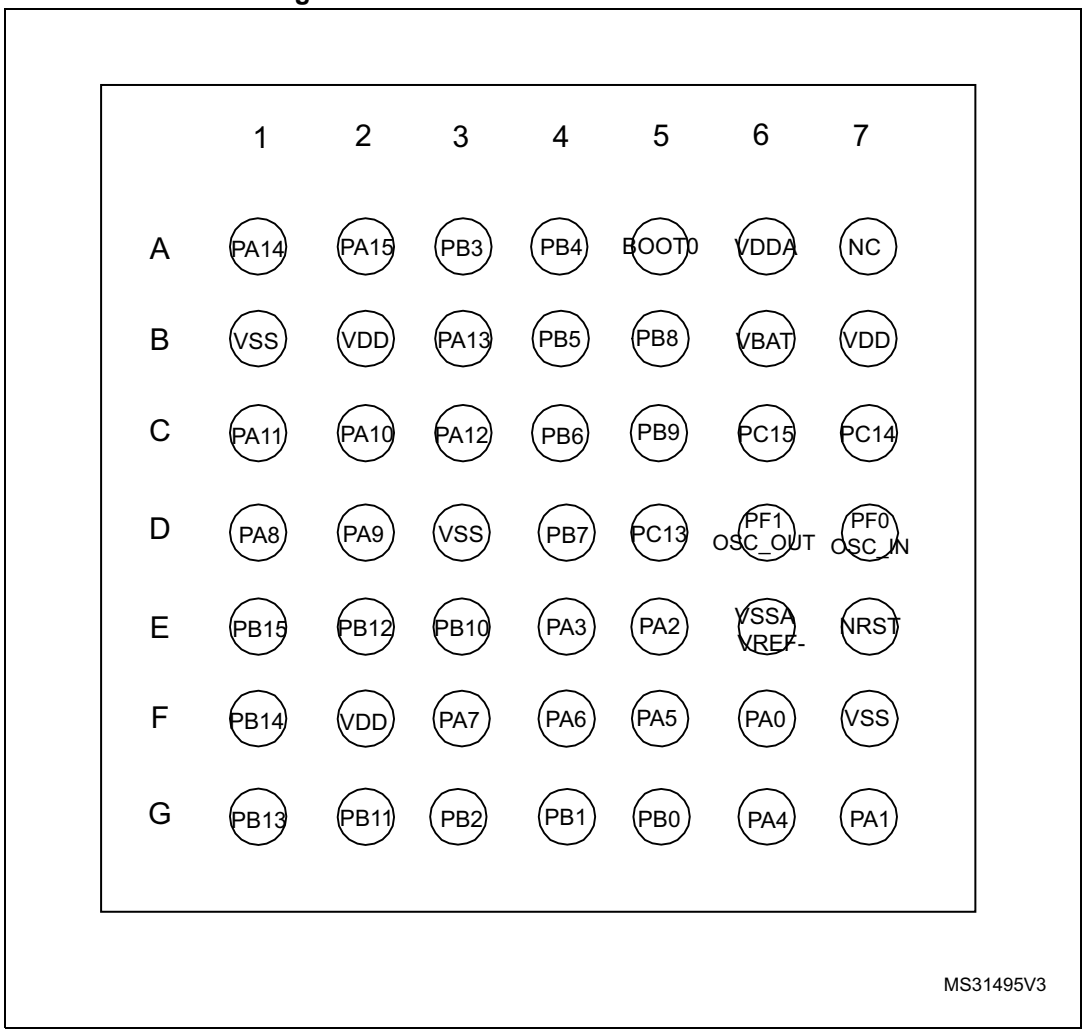

1. The above figure shows the package top view.
2. NC: Not connected.

Table 12. Legend/abbreviations used in the pinout table

Name		Abbreviation	Definition
Pin name		Unless otherwise specified in brackets below the pin name, the pin function during and after reset is the same as the actual pin name	
Pin type		S	Supply pin
		I	Input only pin
		I/O	Input / output pin
I/O structure		FT	5 V tolerant I/O
		FTf	5 V tolerant I/O, I2C FM+ option
		TTa	3.3 V tolerant I/O
		TT	3.3 V tolerant I/O
		TC	Standard 3.3V I/O
		B	Dedicated BOOT0 pin
		RST	Bi-directional reset pin with embedded weak pull-up resistor
Notes		Unless otherwise specified by a note, all I/Os are set as floating inputs during and after reset	
Pin functions	Alternate functions	Functions selected through GPIOx_AFR registers	
	Additional functions	Functions directly selected/enabled through peripheral registers	

Table 13. STM32F302x6/8 pin definitions

Pin Number				Pin name (function after reset)	Pin type	I/O structure	Notes	Alternate functions	Additional functions
UQFN32	WLCSP49	LQFP48	LQFP64						
-	B6	1	1	VBAT	S	-	-	Backup power supply	
-	D5	2	2	PC13(1) TAMPER1 WKUP2 (PC13)	I/O	TC	(1)	TIM1_CH1N	WKUP2, RTC_TAMP1, RTC_TS, RTC_OUT
-	C7	3	3	PC14(1) OSC32_IN (PC14)	I/O	TC	(1)	-	OSC32_IN
-	C6	4	4	PC15(1) OSC32_OUT (PC14)	I/O	TC	(1)	-	OSC32_OUT
2	D7	5	5	PF0 OSC_IN (PF0)	I	FTf	-	I2C2_SDA, SPI2_NSS/I2S2_WS, TIM1_CH3N	OSC_IN
3	D6	6	6	PF1 OSC_OUT (PF1)	O	FTf	-	I2C2_SCL, SPI2_SCK/I2S2_CK	OSC_OUT
4	E7	7	7	NRST	I/O	RST	-	Device reset input/internal reset output (active low)	
-	-	-	8	PC0	I/O	TTa	-	EVENTOUT, TIM1_CH1	ADC1_IN6
-	-	-	9	PC1	I/O	TTa	-	EVENTOUT, TIM1_CH2	ADC1_IN7
-	-	-	10	PC2	I/O	TTa	-	EVENTOUT, TIM1_CH3	ADC1_IN8
-	-	-	11	PC3	I/O	TTa	-	EVENTOUT, TIM1_CH4, TIM1_BKIN2	ADC1_IN9
6	E6	8	12	VSSA/VREF-	S	-	-	Analog ground/Negative reference voltage	
5	A6	9	13	VDDA/VREF+	S	-	-	Analog power supply/Positive reference voltage	

Table 13. STM32F302x6/8 pin definitions (continued)

Pin Number				Pin name (function after reset)	Pin type	I/O structure	Notes	Alternate functions	Additional functions
UQFN32	WLCSP49	LQFP48	LQFP64						
7	F6	10	14	PA0 -TAMPER2-WKUP1	I/O	TTa	(2)	TIM2_CH1/TIM2_ETR, TSC_G1_IO1, USART2_CTS, EVENTOUT	ADC1_IN1, RTC_TAMP2, WKUP1
8	G7	11	15	PA1	I/O	TTa	(2)	RTC_REFIN, TIM2_CH2, TSC_G1_IO2, USART2_RTS_DE, TIM15_CH1N, EVENTOUT	ADC1_IN2
9	E5	12	16	PA2	I/O	TTa	(2)	TIM2_CH3, TSC_G1_IO3, USART2_TX, COMP2_OUT, TIM15_CH1, EVENTOUT	ADC1_IN3, COMP2_INM
10	E4	13	17	PA3	I/O	TTa	(2)	TIM2_CH4, TSC_G1_IO4, USART2_RX, TIM15_CH2, EVENTOUT	ADC1_IN4
-	F7	-	18	VSS_4	S	-	-	-	-
-	F2	-	19	VDD_4	S	-	-	-	-
11	G6	14	20	PA4	I/O	TTa	(2)(3)	TSC_G2_IO1, SPI3_NSS/I2S3_WS, USART2_CK, EVENTOUT	ADC1_IN5, DAC1_OUT1, COMP2_INM, COMP4_INM, COMP6_INM
12	F5	15	21	PA5	I/O	TTa	-	TIM2_CH1/TIM2_ETR, TSC_G2_IO2, EVENTOUT	OPAMP2_VINM
13	F4	16	22	PA6	I/O	TTa	(3)	TIM16_CH1, TSC_G2_IO3, TIM1_BKIN, EVENTOUT	ADC1_IN10, OPAMP2_VOUT
14	F3	17	23	PA7	I/O	TTa	-	TIM17_CH1, TSC_G2_IO4, TIM1_CH1N, EVENTOUT	ADC1_IN15, COMP2_INP, OPAMP2_VINP

Table 13. STM32F302x6/8 pin definitions (continued)

Pin Number				Pin name (function after reset)	Pin type	I/O structure	Notes	Alternate functions	Additional functions
UQFN32	WLCSP49	LQFP48	LQFP64						
-	-	-	24	PC4	I/O	TT	-	EVENTOUT, TIM1_ETR, USART1_TX	
-	-	-	25	PC5	I/O	TTa	-	EVENTOUT, TIM15_BKIN, TSC_G3_IO1, USART1_RX	OPAMP2_VINM
15	G5	18	26	PB0	I/O	TTa	-	TSC_G3_IO2, TIM1_CH2N, EVENTOUT	ADC1_IN11, COMP4_INP, OPAMP2_VINP
-	G4	19	27	PB1	I/O	TTa	-	TSC_G3_IO3, TIM1_CH3N, COMP4_OUT, EVENTOUT	ADC1_IN12
-	G3	20	28	PB2	I/O	TTa	-	TSC_G3_IO4, EVENTOUT	COMP4_INM
-	E3	21	29	PB10	I/O	TT	-	TIM2_CH3, TSC_SYNC, USART3_TX, EVENTOUT	
-	G2	22	30	PB11	I/O	TTa	-	TIM2_CH4, TSC_G6_IO1, USART3_RX, EVENTOUT	ADC1_IN14, COMP6_INP
16	D3	23	31	VSS_2	S	-	-	Digital ground	
17	B2	24	32	VDD_2	S	-	-	Digital power supply	
-	E2	25	33	PB12	I/O	TT	-	TSC_G6_IO2, I2C2_SMBAL, SPI2_NSS/I2S2_WS, TIM1_BKIN, USART3_CK, EVENTOUT	
-	G1	26	34	PB13	I/O	TTa	-	TSC_G6_IO3, SPI2_SCK/I2S2_CK, TIM1_CH1N, USART3_CTS, EVENTOUT	ADC1_IN13

Table 13. STM32F302x6/8 pin definitions (continued)

Pin Number				Pin name (function after reset)	Pin type	I/O structure	Notes	Alternate functions	Additional functions
UQFN32	WLCSP49	LQFP48	LQFP64						
-	F1	27	35	PB14	I/O	TTa	-	TIM15_CH1, TSC_G6_IO4, SPI2_MISO/I2S2ext_SD, TIM1_CH2N, USART3_RTS_DE, EVENTOUT	OPAMP2_VINP
-	E1	28	36	PB15	I/O	TTa	-	RTC_REFIN, TIM15_CH2, TIM15_CH1N, TIM1_CH3N, SPI2_MOSI/I2S2_SD, EVENTOUT	COMP6_INM
-	-	-	37	PC6	I/O	FT	-	EVENTOUT, I2S2_MCK, COMP6_OUT	-
-	-	-	38	PC7	I/O	FT	-	EVENTOUT, I2S3_MCK	-
-	-	-	39	PC8	I/O	FT	-	EVENTOUT	-
-	-	-	40	PC9	I/O	FTf	-	EVENTOUT, I2C3_SDA, I2SCKIN	-
18	D1	29	41	PA8	I/O	FT	-	MCO, I2C3_SCL, I2C2_SMBAL, I2S2_MCK, TIM1_CH1, USART1_CK, EVENTOUT	-
19	D2	30	42	PA9	I/O	FTf	-	I2C3_SMBAL, TSC_G4_IO1, I2C2_SCL, I2S3_MCK, TIM1_CH2, USART1_TX, TIM15_BKIN, TIM2_CH3, EVENTOUT	-

Table 13. STM32F302x6/8 pin definitions (continued)

Pin Number				Pin name (function after reset)	Pin type	I/O structure	Notes	Alternate functions	Additional functions
UQFN32	WLCSP49	LQFP48	LQFP64						
20	C2	31	43	PA10	I/O	FTf	-	TIM17_BKIN, TSC_G4_IO2, I2C2_SDA, SPI2_MISO/I2S2ext_SD, TIM1_CH3, USART1_RX, COMP6_OUT, TIM2_CH4, EVENTOUT	-
21	C1	32	44	PA11	I/O	FT	-	SPI2_MOSI/I2S2_SD, TIM1_CH1N, USART1_CTS, CAN_RX,TIM1_CH4, TIM1_BKIN2, EVENTOUT	USB_DM
22	C3	33	45	PA12	I/O	FT	-	TIM16_CH1, I2SCKIN, TIM1_CH2N, USART1_RTS_DE, COMP2_OUT, CAN_TX, TIM1_ETR, EVENTOUT	USB_DP
23	B3	34	46	PA13	I/O	FT	-	SWDIO, TIM16_CH1N, TSC_G4_IO3, IR-OUT, USART3_CTS, EVENTOUT	-
-	B1	35	47	VSS_3	S	-	-	Digital ground	
-	B2	36	48	VDD_3	S	-	-	Digital power supply	
24	A1	37	49	PA14	I/O	FTf	-	SWCLK-JTCK, TSC_G4_IO4, I2C1_SDA, TIM1_BKIN, USART2_TX, EVENTOUT	-
25	A2	38	50	PA15	I/O	FTf	-	JTDI, TIM2_CH1/TIM2_ETR, TSC_SYNC, I2C1_SCL, SPI3_NSS/I2S3_WS, USART2_RX, TIM1_BKIN, EVENTOUT	-

Table 13. STM32F302x6/8 pin definitions (continued)

Pin Number				Pin name (function after reset)	Pin type	I/O structure	Notes	Alternate functions	Additional functions
UQFN32	WLCSP49	LQFP48	LQFP64						
-	-	-	51	PC10	I/O	FT	-	EVENTOUT, SPI3_SCK/I2S3_CK, USART3_TX	-
-	-	-	52	PC11	I/O	FT	-	EVENTOUT, SPI3_MISO/I2S3ext_SD, USART3_RX	-
-	-	-	53	PC12	I/O	FT	-	EVENTOUT, SPI3_MOSI/I2S3_SD, USART3_CK	-
-	-	-	54	PD2	I/O	FT	-	EVENTOUT	-
26	A3	39	55	PB3	I/O	FT	-	JTDO-TRACESWO, TIM2_CH2, TSC_G5_IO1, SPI3_SCK/I2S3_CK, USART2_TX, EVENTOUT	-
27	A4	40	56	PB4	I/O	FT	-	JTRST, TIM16_CH1, TSC_G5_IO2, SPI3_MISO/I2S3_ext_SD, USART2_RX, TIM17_BKIN, EVENTOUT	-
28	B4	41	57	PB5	I/O	FT	-	TIM16_BKIN, I2C1_SMBAI, SPI3_MOSI/I2S3_SD, USART2_CK, I2C3_SDA, TIM17_CH1, EVENTOUT	-
29	C4	42	58	PB6	I/O	FTf	-	TIM16_CH1N, TSC_G5_IO3, I2C1_SCL, USART1_TX, EVENTOUT	-
30	D4	43	59	PB7	I/O	FTf	-	TIM17_CH1N, TSC_G5_IO4, I2C1_SDA, USART1_RX, EVENTOUT	-

Table 13. STM32F302x6/8 pin definitions (continued)

Pin Number				Pin name (function after reset)	Pin type	I/O structure	Notes	Alternate functions	Additional functions
UQFN32	WLCSP49	LQFP48	LQFP64						
31	A5	44	60	BOOT0	I	B	-	Boot memory selection	
-	B5	45	61	PB8	I/O	FTf	-	TIM16_CH1, TSC_SYNC, I2C1_SCL, USART3_RX, CAN_RX, TIM1_BKIN, EVENTOUT	-
-	C5	46	62	PB9	I/O	FTf	-	TIM17_CH1, I2C1_SDA, IR-OUT, USART3_TX, COMP2_OUT, CAN_TX, EVENTOUT	-
32	D3	47	63	VSS_1	S	-	-	Digital ground	
“1”	B7	48	64	VDD_1	S	-	-	Digital power supply	

1. PC13, PC14 and PC15 are supplied through the power switch. Since the switch sinks only a limited amount of current (3 mA), the use of GPIO PC13 to PC15 in output mode is limited:

   - The speed should not exceed 2 MHz with a maximum load of 30 pF

   - These GPIOs must not be used as current sources (e.g. to drive an LED).

   After the first backup domain power-up, PC13, PC14 and PC15 operate as GPIOs. Their function then depends on the content of the Backup registers which is not reset by the main reset. For details on how to manage these GPIOs, refer to the Battery backup domain and BKP register description sections in the RM0365 reference manual.

2. Fast ADC channel.

3. These GPIOs offer a reduced touch sensing sensitivity. It is thus recommended to use them as sampling capacitor I/O.

Table 14. Alternate functions for Port A

Port & pin name	AF0	AF1	AF2	AF3	AF4	AF5	AF6	AF7	AF8	AF9	AF10	AF11	AF12	AF13	AF14	AF15
	SYS_AF	TIM2/TIM15/TIM16 /TIM17/EVENT	I2C3/TIM1/TIM2/TIM15	I2C3/TIM15/TSC	I2C1/I2C2/TIM1/ TIM16/TIM17	SPI2/I2S2/ SPI3/I2S3/Infrared	SPI2/I2S2/SPI3/ I2S3/TIM1/Infrared	USART1/USART2/USART3/ CAN/GPCOMP6	I2C3/GPCOMP2 /GPCOMP4/GPCOMP6	CAN/TIM1/TIM15	TIM2/TIM17	TIM1	TIM1	-	-	EVENT
PA0	-	TIM2 _CH1/ TIM2 _ETR	-	TSC _G1_IO1	-	-	-	USART2 _CTS	-	-	-	-	-	-	-	EVENT OUT
PA1	RTC _REFIN	TIM2 _CH2	-	TSC _G1_IO2	-	-	-	USART2 _RTS_D E	-	TIM15 _CH1N	-	-	-	-	-	EVENT OUT
PA2	-	TIM2 _CH3	-	TSC _G1_IO3	-	-	-	USART2 _TX	COMP2 _OUT	TIM15 _CH1	-	-	-	-	-	EVENT OUT
PA3	-	TIM2 _CH4	-	TSC _G1_IO4	-	-	-	USART2 _RX	-	TIM15 _CH2	-	-	-	-	-	EVENT OUT
PA4	-	-	-	TSC _G2_IO1	-	-	SPI3_NSS/ I2S3_WS	USART2 _CK	-	-	-	-	-	-	-	EVENT OUT
PA5	-	TIM2 _CH1/ TIM2 _ETR	-	TSC _G2_IO2	-	-	-	-	-	-	-	-	-	-	-	EVENT OUT
PA6	-	TIM16 _CH1	-	TSC _G2_IO3	-	-	TIM1_BKIN	-	-	-	-	-	-	-	-	EVENT OUT
PA7	-	TIM17 _CH1	-	TSC _G2_IO4	-	-	TIM1 _CH1N	-	-	-	-	-	-	-	-	EVENT OUT
PA8	MCO	-	-	I2C3 _SCL	I2C2 _SMBAL	I2S2 _MCK	TIM1_CH1	USART1 _CK	-	-	-	-	-	-	-	EVENT OUT

Table 14. Alternate functions for Port A (continued)

Port & pin name	AF0	AF1	AF2	AF3	AF4	AF5	AF6	AF7	AF8	AF9	AF10	AF11	AF12	AF13	AF14	AF15
	SYS_AF	TIM2/TIM15/TIM16 /TIM17/EVENT	I2C3/TIM1/TIM2/TIM15	I2C3/TIM15/TSC	I2C1/I2C2/TIM1/ TIM16/TIM17	SPI2/I2S2/ SPI3/I2S3/Infrared	SPI2/I2S2/SPI3/ I2S3/TIM1/Infrared	USART1/USART2/USART3/ CAN/GPCOMP6	I2C3/GPCOMP2 /GPCOMP4/GPCOMP6	CAN/TIM1/TIM15	TIM2/TIM17	TIM1	TIM1	-	-	EVENT
PA9	-	-	I2C3 _SMBAL	TSC _G4_IO1	I2C2 _SCL	I2S3 _MCK	TIM1_CH2	USART1 _TX	-	TIM15 _BKIN	TIM2 _CH3	-	-	-	-	EVENT OUT
PA10	-	TIM17 _BKIN		TSC _G4_IO2	I2C2 _SDA	SPI2_MIS O/I2S2ext _SD	TIM1_CH3	USART1 _RX	COMP6 _OUT	-	TIM2 _CH4	-	-	-	-	EVENT OUT
PA11	-	-	-	-	-	SPI2_MO SI/I2S2 _SD	TIM1 _CH1N	USART1 _CTS	-	CAN _RX	-	TIM1 _CH4	TIM1 _BKIN2	-	-	EVENT OUT
PA12	-	TIM16 _CH1	-	-	-	I2SCKIN	TIM1 _CH2N	USART1 _RTS_D E	COMP2 _OUT	CAN _TX	-	TIM1 _ETR	-	-	-	EVENT OUT
PA13	SWDAT-JTMS	TIM16 _CH1N	-	TSC _G4_IO3	-	IR-OUT	-	USART3 _CTS	-	-	-	-	-	-	-	EVENT OUT
PA14	SWCLK-JTCK		-	TSC _G4_IO4	I2C1 _SDA	-	TIM1_BKIN	USART2 _TX	-	-	-	-	-	-	-	EVENT OUT
PA15	JTDI	TIM2_C H1/ TIM2_E TR	-	TSC _SYNC	I2C1 _SCL	-	SPI3_NSS/ I2S3_WS	USART2 _RX	-	TIM1 _BKIN	-	-	-	-	-	EVENT OUT

Table 15. Alternate functions for Port B

Port & pin name	AF0	AF1	AF2	AF3	AF4	AF5	AF6	AF7	AF8	AF9	AF10	AF11	AF12	AF13	AF14	AF15
	SYS_AF	TIM2/TIM15/TIM16 /TIM17/EVENT	I2C3/TIM1/TIM2/TIM15	I2C3/TIM15/TSC	I2C1/I2C2/TIM1/ TIM16/TIM17	SPI2/I2S2/ SPI3/I2S3/Infrared	SPI2/I2S2/SPI3/ I2S3/TIM1/Infrared	USART1/USART2/USART3/ CAN/GPCOMP6	I2C3/GPCOMP2 /GPCOMP4/GPCOMP6	CAN/TIM1/TIM15	TIM2/TIM17	TIM1	TIM1	-	-	EVENT
PB0	-	-	-	TSC _G3_IO2	-	-	TIM1 _CH2N	-	-	-	-	-	-	-	-	EVENT OUT
PB1	-	-	-	TSC _G3_IO3	-	-	TIM1 _CH3N	-	COMP4_ OUT	-	-	-	-	-	-	EVENT OUT
PB2				TSC _G3_IO4	-	-	-	-	-	-	-	-	-	-	-	EVENT OUT
PB3	JTDO-TRACE SWO	TIM2 _CH2	-	TSC _G5_IO1	-	-	SPI3_SC K/I2S3_ CK	USART2 _TX	-	-	-	-	-	-	-	EVENT OUT
PB4	JTRST	TIM16 _CH1	-	TSC _G5_IO2	-	-	SPI3_MI SO/I2S3 _SD	USART2 _RX	-	-	TIM17 _BKIN	-	-	-	-	EVENT OUT
PB5	-	TIM16 _BKIN	-	-	I2C1 _SMBAI	-	SPI3 _MOSI/ I2S3ext_ SD	USART2 _CK	I2C3 _SDA	-	TIM17 _CH1	-	-	-	-	EVENT OUT
PB6	-	TIM16 _CH1N	-	TSC _G5_IO3	I2C1 _SCL	-	-	USART1 _TX	-	-	-	-	-	-	-	EVENT OUT
PB7	-	TIM17 _CH1N	-	TSC _G5_IO4	I2C1 _SDA	-	-	USART1 _RX	-	-	-	-	-	-	-	EVENT OUT
PB8	-	TIM16 _CH1	-	TSC _SYNC	I2C1 _SCL	-	-	USART3 _RX	-	CAN _RX	-	-	TIM1 _BKIN	-	-	EVENT OUT

Table 15. Alternate functions for Port B (continued)

Port & pin name	AF0	AF1	AF2	AF3	AF4	AF5	AF6	AF7	AF8	AF9	AF10	AF11	AF12	AF13	AF14	AF15
	SYS_AF	TIM2/TIM15/TIM16 /TIM17/EVENT	I2C3/TIM1/TIM2/TIM15	I2C3/TIM15/TSC	I2C1/I2C2/TIM1/ TIM16/TIM17	SPI2/I2S2/ SPI3/I2S3/Infrared	SPI2/I2S2/SPI3/ I2S3/TIM1/Infrared	USART1/USART2/USART3/ CAN/GPCOMP6	I2C3/GPCOMP2 /GPCOMP4/GPCOMP6	CAN/TIM1/TIM15	TIM2/TIM17	TIM1	TIM1	-	-	EVENT
PB9	-	TIM17 _CH1	-	-	I2C1 _SDA	-	IR-OUT	USART3 _TX	COMP2_ OUT	CAN _TX	-	-	-	-	-	EVENT OUT
PB10	-	TIM2 _CH3	-	TSC _SYNC	-	-	-	USART3 _TX	-	-	-	-	-	-	-	EVENT OUT
PB11	-	TIM2 _CH4	-	TSC _G6_IO1	-	-	-	USART3 _RX	-	-	-	-	-	-	-	EVENT OUT
PB12	-	-	-	TSC _G6_IO2	I2C2 _SMBAL	SPI2_NS S/I2S2_ WS	TIM1 _BKIN	USART3 _CK	-	-	-	-	-	-	-	EVENT OUT
PB13	-	-	-	TSC _G6_IO3	-	SPI2_SC K/ I2S2_CK	TIM1 _CH1N	USART3 _CTS	-	-	-	-	-	-	-	EVENT OUT
PB14	-	TIM15 _CH1	-	TSC _G6_IO4	-	SPI2_MI SO/I2S2 ext_SD	TIM1 _CH2N	USART3 _RTS _DE	-	-	-	-	-	-	-	EVENT OUT
PB15	RTC _REFIN	TIM15 _CH2	TIM15 _CH1N	-	TIM1 _CH3N	SPI2_M OSI/ I2S2_SD	-	-	-	-	-	-	-	-	-	EVENT OUT

Table 16. Alternate functions for Port C

Port & pin name	AF0	AF1	AF2	AF3	AF4	AF5	AF6	AF7
	SYS_AF	TIM2/TIM15/ TIM16/TIM17/ EVENT	I2C3/TIM1/TIM2 /TIM15	I2C3/TIM15/ TSC	I2C1/I2C2/TIM1/ TIM16/TIM17	SPI2/I2S2/ SPI3/I2S3 Infrared	SPI2/I2S2/SPI3/ I2S3/TIM1/ Infrared	USART1/ USART2/ USART3/CAN/ GPCOMP6
PC0	-	EVENTOUT	TIM1_CH1	-	-	-	-	-
PC1	-	EVENTOUT	TIM1_CH2	-	-	-	-	-
PC2	-	EVENTOUT	TIM1_CH3	-	-	-	-	-
PC3	-	EVENTOUT	TIM1_CH4	-	-	-	TIM1_BKIN2	-
PC4	-	EVENTOUT	TIM1_ETR	-	-	-	-	USART1_TX
PC5	-	EVENTOUT	TIM15_BKIN	TSC_G3_IO1	-	-	-	USART1_RX
PC6	-	EVENTOUT	-	-	-	-	I2S2_MCK	COMP6_OUT
PC7	-	EVENTOUT	-	-	-	-	I2S3_MCK	-
PC8	-	EVENTOUT	-	-	-	-	-	-
PC9	-	EVENTOUT	-	I2C3_SDA	-	I2SCKIN	-	-
PC10	-	EVENTOUT	-	-	-	-	SPI3_SCK/ I2S3_CK	USART3_TX
PC11	-	EVENTOUT	-	-	-	-	SPI3_MISO/ I2S3ext_SD	USART3_RX
PC12	-	EVENTOUT	-	-	-	-	SPI3_MOSI/ I2S3_SD	USART3_CK
PC13	-	-	-	-	TIM1_CH1N	-	-	-
PC14	-	-	-	-	-	-	-	-
PC15	-	-	-	-	-	-	-	-

Table 17. Alternate functions for Port D

Port & pin name	AF0	AF1	AF2	AF3	AF4	AF5	AF6	AF7
	SYS_AF	TIM2/TIM15/ TIM16/TIM17/ EVENT	I2C3/TIM1/TIM2/ TIM15	I2C3/TIM15/TSC	I2C1/I2C2/TIM1/ TIM16/TIM17	SPI2/I2S2/ SPI3/I2S3/ Infrared	SPI2/I2S2/SPI3/ I2S3/TIM1/ Infrared	USART1/ USART2/ USART3/CAN/ GPCOMP6
PD2	-	EVENTOUT	-	-	-	-	-	-

Table 18. Alternate functions for Port F

Port & pin name	AF0	AF1	AF2	AF3	AF4	AF5	AF6	AF7
	SYS_AF	TIM2/TIM15/ TIM16/TIM17/ EVENT	I2C3/TIM1/TIM2/ TIM15	I2C3/TIM15/TSC	I2C1/I2C2/TIM1/ TIM16/TIM17	SPI2/I2S2/ SPI3/I2S3/ Infrared	SPI2/I2S2/SPI3/ I2S3/TIM1/ Infrared	USART1/USAR T2/USART3/ CAN/GPCOMP6
PF0	-	-	-	-	I2C2_SDA	SPI2_NSS/ I2S2_WS	TIM1_CH3N	-
PF1	-	-	-	-	I2C2_SCL	SPI2_SCK/ I2S2_CK	-	-

5 Memory mapping

Figure 8. STM32F302x6/8 memory mapping

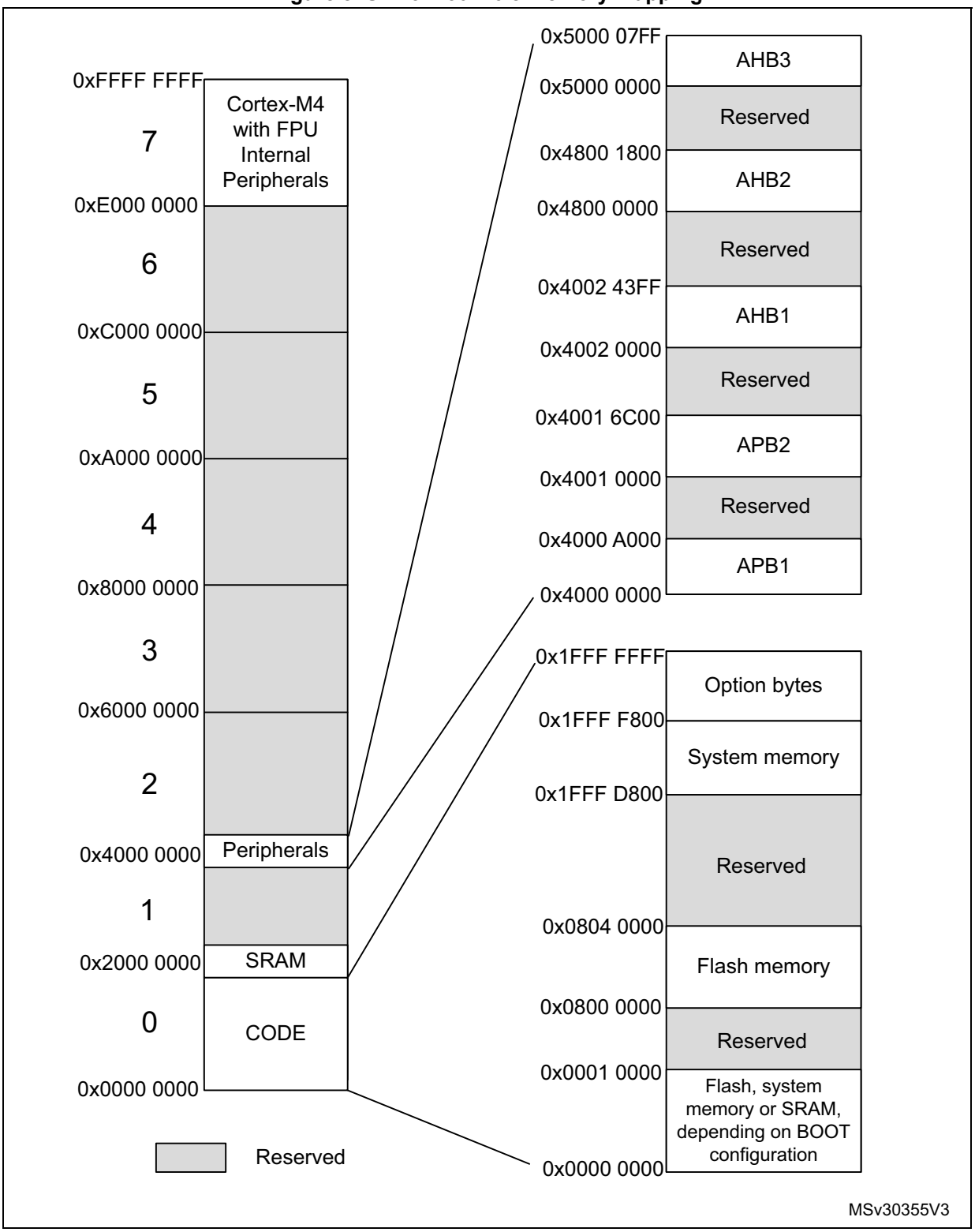

Table 19. STM32F302x6 STM32F302x8 peripheral register boundary addresses (1)

Bus	Boundary address	Size (bytes)	Peripheral
AHB3	0x5000 0000 - 0x5000 03FF	1 K	ADC1
	0x4800 1800 - 0x4FFF FFFF	~132 M	Reserved
AHB2	0x4800 1400 - 0x4800 17FF	1 K	GPIOF
	0x4800 1000 - 0x4800 13FF	1 K	Reserved
	0x4800 0C00 - 0x4800 0FFF	1 K	GPIOD
	0x4800 0800 - 0x4800 0BFF	1 K	GPIOC
	0x4800 0400 - 0x4800 07FF	1 K	GPIOB
	0x4800 0000 - 0x4800 03FF	1 K	GPIOA
	0x4002 4400 - 0x47FF FFFF	~128 M	Reserved
AHB1	0x4002 4000 - 0x4002 43FF	1 K	TSC
	0x4002 3400 - 0x4002 3FFF	3 K	Reserved
	0x4002 3000 - 0x4002 33FF	1 K	CRC
	0x4002 2400 - 0x4002 2FFF	3 K	Reserved
	0x4002 2000 - 0x4002 23FF	1 K	Flash interface
	0x4002 1400 - 0x4002 1FFF	3 K	Reserved
	0x4002 1000 - 0x4002 13FF	1 K	RCC
	0x4002 0800 - 0x4002 0FFF	2 K	Reserved
	0x4002 0400 - 0x4002 07FF	1 K	Reserved
	0x4002 0000 - 0x4002 03FF	1 K	DMA1
	0x4001 8000 - 0x4001 FFFF	32 K	Reserved
APB2	0x4001 4C00 - 0x4001 7FFF	13 K	Reserved
	0x4001 4800 - 0x4001 4BFF	1 K	TIM17
	0x4001 4400 - 0x4001 47FF	1 K	TIM16
	0x4001 4000 - 0x4001 43FF	1 K	TIM15
	0x4001 3C00 - 0x4001 3FFF	1 K	Reserved
	0x4001 3800 - 0x4001 3BFF	1 K	USART1
	0x4001 3400 - 0x4001 37FF	1 K	Reserved
	0x4001 3000 - 0x4001 33FF	1 K	Reserved
	0x4001 0800 - 0x4001 2FFF	10 K	TIM1
	0x4001 0400 - 0x4001 07FF	1 K	EXTI
	0x4001 0000 - 0x4001 03FF	1 K	SYSCFG + COMP + OPAMP
	0x4000 7C00 - 0x4000 FFFF	33 K	Reserved

Table 19. STM32F302x6 STM32F302x8 peripheral register boundary addresses (continued)(1)

Bus	Boundary address	Size (bytes)	Peripheral
APB1	0x4000 7800 - 0x4000 7BFF	9 K	I2C3
	0x4000 7400 - 0x4000 77FF	1 K	DAC1
	0x4000 7000 - 0x4000 73FF	1 K	PWR
	0x4000 6C00 - 0x4000 6FFF	1 K	Reserved
	0x4000 6800 - 0x4000 6BFF	1 K	Reserved
	0x4000 6400 - 0x4000 67FF	1 K	bxCAN
	0x4000 6000 - 0x4000 63FF	1 K	USB/CAN SRAM
	0x4000 5C00 - 0x4000 5FFF	1 K	USB device FS
	0x4000 5800 - 0x4000 5BFF	1 K	I2C2
	0x4000 5400 - 0x4000 57FF	1 K	I2C1
	0x4000 5000 - 0x4000 53FF	1 K	Reserved
	0x4000 4C00 - 0x4000 4FFF	1 K	Reserved
	0x4000 4800 - 0x4000 4BFF	1 K	USART3
	0x4000 4400 - 0x4000 47FF	1 K	USART2
	0x4000 4000 - 0x4000 43FF	1 K	I2S3ext
	0x4000 3C00 - 0x4000 3FFF	1 K	SPI3/I2S3
	0x4000 3800 - 0x4000 3BFF	1 K	SPI2/I2S2
	0x4000 3400 - 0x4000 37FF	1 K	I2S2ext
	0x4000 3000 - 0x4000 33FF	1 K	IWDG
	0x4000 2C00 - 0x4000 2FFF	1 K	WWDG
	0x4000 2800 - 0x4000 2BFF	1 K	RTC
	0x4000 1400 - 0x4000 27FF	5 K	Reserved
	0x4000 1000 - 0x4000 13FF	1 K	TIM6
	0x4000 0C00 - 0x4000 0FFF	1 K	Reserved
	0x4000 0800 - 0x4000 0BFF	1 K	Reserved
	0x4000 0400 - 0x4000 07FF	1 K	Reserved
	0x4000 0000 - 0x4000 03FF	1 K	TIM2
	0x2000 4000 - 3FFF FFFF	~512 M	Reserved
	0x2000 0000 - 0x2000 3FFF	16K	SRAM
	0x1FFF F800 - 0x1FFF FFFF	2 K	Option bytes
	0x1FFF D800 - 0x1FFF F7FF	8 K	System memory
	0x0804 0000 - 0x1FFF D7FF	~384 M	Reserved
	0x0800 0000 - 0x0800 FFFF	64 K	Main Flash memory

Table 19. STM32F302x6 STM32F302x8 peripheral register boundary addresses (continued)(1)

Bus	Boundary address	Size (bytes)	Peripheral
	0x0004 0000 - 0x07FF FFFF	~128 M	Reserved
APB1	0x0000 000 - 0x0000 FFFF	64 K	Main Flash memory, system memory or SRAM depending on BOOT configuration

1. The gray color is used for reserved Flash memory addresses.

6 Electrical characteristics

6.1 Parameter conditions

Unless otherwise specified, all voltages are referenced to V_{SS}.

6.1.1 Minimum and maximum values

Unless otherwise specified, the minimum and maximum values are guaranteed in the worst conditions of ambient temperature, supply voltage and frequencies by tests in production on 100% of the devices with an ambient temperature at T_A = 25 °C and T_A = $T_A$max (given by the selected temperature range).

Data based on characterization results, design simulation and/or technology characteristics are indicated in the table footnotes. Based on characterization, the minimum and maximum values refer to sample tests and represent the mean value plus or minus three times the standard deviation (mean±3σ).

6.1.2 Typical values

Unless otherwise specified, typical data are based on T_A = 25 °C, V_{DD} = V_{DDA}= 3.3 V. They are given only as design guidelines and are not tested.

Typical ADC accuracy values are determined by characterization of a batch of samples from a standard diffusion lot over the full temperature range, where 95% of the devices have an error less than or equal to the value indicated (mean±2σ).

6.1.3 Typical curves

Unless otherwise specified, all typical curves are given only as design guidelines and are not tested.

6.1.4 Loading capacitor

The loading conditions used for pin parameter measurement are shown in *Figure 9*.

6.1.5 Pin input voltage

The input voltage measurement on a pin of the device is described in *Figure 10*.

Figure 9. Pin loading conditions

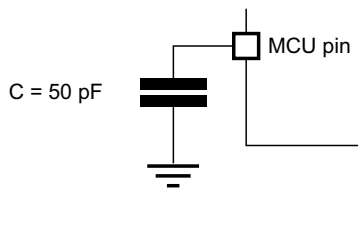

Figure 10. Pin input voltage

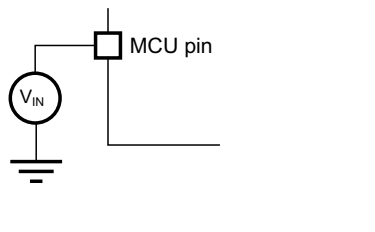

6.1.6 Power supply scheme

Figure 11. Power supply scheme

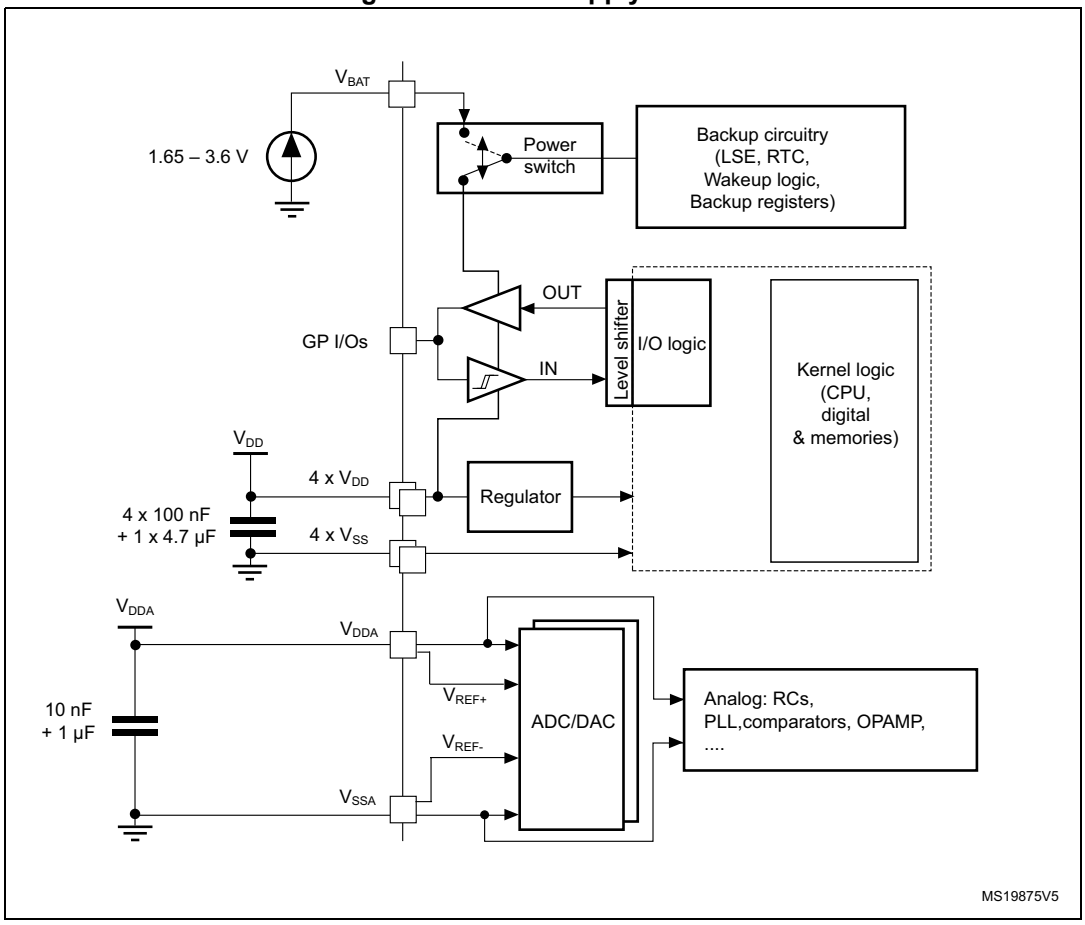

Caution: Each power supply pair (for example V_{DD}/V_{SS}, V_{DDA}/V_{SSA}) must be decoupled with filtering ceramic capacitors as shown above. These capacitors must be placed as close as possible to, or below the appropriate pins on the underside of the PCB to ensure the good functionality of the device.

6.1.7 Current consumption measurement

Figure 12. Current consumption measurement scheme

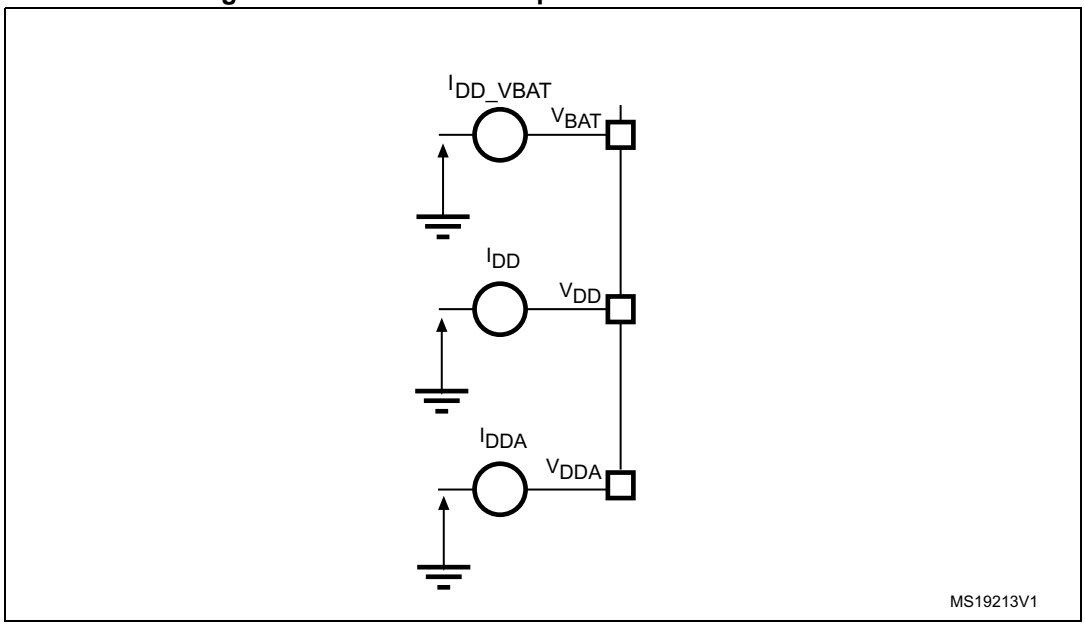

6.2 Absolute maximum ratings

Stresses above the absolute maximum ratings listed in *Table 20: Voltage characteristics*, *Table 21: Current characteristics*, and *Table 22: Thermal characteristics* may cause permanent damage to the device. These are stress ratings only and functional operation of the device at these conditions is not implied. Exposure to maximum rating conditions for extended periods may affect device reliability.

Table 20. Voltage characteristics(1)

Symbol	Ratings	Min	Max	Unit
$V_{DD}–V_{SS}$	External main supply voltage (including V_{DDA}, V_{BAT} and V_{DD})	-0.3	4.0	V
$V_{DD}–V_{DDA}$	Allowed voltage difference for $V_{DD} > V_{DDA}$	-	0.4	V
V_{IN}(2)	Input voltage on FT and FTf pins	$V_{SS} – 0.3$	$V_{DD} + 4.0$	V
	Input voltage on TTa and TT pins	$V_{SS} – 0.3$	4.0	
	Input voltage on any other pin	$V_{SS} – 0.3$	4.0	
	Input voltage on Boot0 pin	0	9	
$\|\Delta V_{DDx}\|$	Variations between different V_{DD} power pins	-	50	mV
$\|V_{SSX} – V_{SS}\|$	Variations between all the different ground pins(3)	-	50	
$V_{ESD(HBM)}$	Electrostatic discharge voltage (human body model)	see *Section 6.3.12: Electrical sensitivity characteristics*		V

1. All main power (V_{DD}, V_{DDA}) and ground (V_{SS}, V_{SSA}) pins must always be connected to the external power supply, in the permitted range. The following relationship must be respected between V_{DDA} and V_{DD}:
V_{DDA} must power on before or at the same time as V_{DD} in the power up sequence.
V_{DDA} must be greater than or equal to V_{DD}.
2. V_{IN} maximum must always be respected. Refer to *Table 21: Current characteristics* for the maximum allowed injected current values.
3. Include V_{REF-} pin.

Table 21. Current characteristics

Symbol	Ratings	Max.	Unit
ΣI_{VDD}	Total current into sum of all VDD_x power lines (source)	130	mA
ΣI_{VSS}	Total current out of sum of all VSS_x ground lines (sink)	-130	
I_{VDD}	Maximum current into each V_{DD_x} power line (source)(1)	100	
I_{VSS}	Maximum current out of each V_{SS_x} ground line (sink)(1)	-100	
$I_{IO(PIN)}$	Output current sunk by any I/O and control pin	25	
	Output current sourced by any I/O and control pin	-25	
$\Sigma I_{IO(PIN)}$	Total output current sunk by sum of all IOs and control pins(2)	80	
	Total output current sourced by sum of all IOs and control pins(2)	-80	
$I_{INJ(PIN)}$	Injected current on TT, FT, FTf and B pins(3)	-5/+0	
	Injected current on TC and RST pin(4)	+/-5	
	Injected current on TTa pins(5)	+/-5	
$\Sigma I_{INJ(PIN)}$	Total injected current (sum of all I/O and control pins)(6)	+/-25	

1. All main power (V_{DD}, V_{DDA}) and ground (V_{SS} and V_{SSA}) pins must always be connected to the external power supply, in the permitted range.
2. This current consumption must be correctly distributed over all I/Os and control pins.The total output current must not be sunk/sourced between two consecutive power supply pins referring to high pin count LQFP packages.
3. Positive injection is not possible on these I/Os and does not occur for input voltages lower than the specified maximum value.
4. A positive injection is induced by $V_{IN} > V_{DD}$ while a negative injection is induced by $V_{IN} < V_{SS}$. $I_{INJ(PIN)}$ must never be exceeded. Refer to *Table 20: Voltage characteristics* for the maximum allowed input voltage values.
5. A positive injection is induced by $V_{IN} > V_{DDA}$ while a negative injection is induced by $V_{IN} < V_{SS}$. I_{INJ}(PIN) must never be exceeded. Refer also to *Table 20: Voltage characteristics* for the maximum allowed input voltage values. Negative injection disturbs the analog performance of the device. See note (2) below *Table 68*.
6. When several inputs are submitted to a current injection, the maximum $\Sigma I_{INJ(PIN)}$ is the absolute sum of the positive and negative injected currents (instantaneous values).

Table 22. Thermal characteristics

Symbol	Ratings	Value	Unit
T_{STG}	Storage temperature range	–65 to +150	°C
T_J	Maximum junction temperature	150	°C

6.3 Operating conditions

6.3.1 General operating conditions

Table 23. General operating conditions

Symbol	Parameter	Conditions	Min	Max	Unit
f_{HCLK}	Internal AHB clock frequency	-	0	72	MHz
f_{PCLK1}	Internal APB1 clock frequency	-	0	36	
f_{PCLK2}	Internal APB2 clock frequency	-	0	72	
V_{DD}	Standard operating voltage	-	2	3.6	V
V_{DDA}	Analog operating voltage (OPAMP and DAC not used)	Must have a potential equal to or higher than V_{DD}	2	3.6	V
	Analog operating voltage (OPAMP and DAC used)		2.4	3.6	
V_{BAT}	Backup operating voltage	-	1.65	3.6	V
V_{IN}	I/O input voltage	TC I/O	–0.3	V_{DD}+0.3	V
		TT I/O(1)	-0.3	3.6	
		TTa I/O pins	–0.3	V_{DDA}+0.3	
		FT and FTf I/O(1)	–0.3	5.5	
		BOOT0	0	5.5	
P_D	Power dissipation at T_A = 85 °C for suffix 6 or T_A = 105 °C for suffix 7(2)	LQFP64	-	444	mW
		LQFP48	-	364	
		WLCSP49	-	408	
		UFQFPN32	-	540	
T_A	Ambient temperature for 6 suffix version	Maximum power dissipation	–40	85	°C
		Low power dissipation(3)	–40	105	
	Ambient temperature for 7 suffix version	Maximum power dissipation	–40	105	°C
		Low power dissipation(3)	–40	125	
T_J	Junction temperature range	6 suffix version	–40	105	°C
		7 suffix version	–40	125	

1. To sustain a voltage higher than V_{DD}+0.3 V, the internal pull-up/pull-down resistors must be disabled.
2. If T_A is lower, higher P_D values are allowed as long as T_J does not exceed T_{Jmax}. See *Table 82: Package thermal characteristics*.
3. In low power dissipation state, T_A can be extended to this range as long as T_J does not exceed T_{Jmax}. See *Table 82: Package thermal characteristics*.

6.3.2 Operating conditions at power-up / power-down

The parameters given in *Table 24* are derived from tests performed under the ambient temperature condition summarized in *Table 23*.

Table 24. Operating conditions at power-up / power-down

Symbol	Parameter	Conditions	Min	Max	Unit
t_{VDD}	V_{DD} rise time rate	-	0	∞	µs/V
	V_{DD} fall time rate		20	∞	
t_{VDDA}	V_{DDA} rise time rate	-	0	∞	
	V_{DDA} fall time rate		20	∞	

6.3.3 Embedded reset and power control block characteristics

The parameters given in *Table 25* are derived from tests performed under ambient temperature and V_{DD} supply voltage conditions summarized in *Table 23*.

Table 25. Embedded reset and power control block characteristics

Symbol	Parameter	Conditions	Min	Typ	Max	Unit
$V_{POR/PDR}$(1)	Power on/power down reset threshold	Falling edge	1.8(2)	1.88	1.96	V
		Rising edge	1.84	1.92	2.0	V
$V_{PDRhyst}$(1)	PDR hysteresis	-	-	40	-	mV
$t_{RSTTEMPO}$(3)	POR reset temporization	-	1.5	2.5	4.5	ms

1. The PDR detector monitors V_{DD} and also V_{DDA} (if kept enabled in the option bytes). The POR detector monitors only V_{DD}.
2. The product behavior is guaranteed by design down to the minimum $V_{POR/PDR}$ value.
3. Based on characterization, not tested in production.

Table 26. Programmable voltage detector characteristics

Symbol	Parameter	Conditions	Min(1)	Typ	Max(1)	Unit
V_{PVD0}	PVD threshold 0	Rising edge	2.1	2.18	2.26	V
		Falling edge	2	2.08	2.16	
V_{PVD1}	PVD threshold 1	Rising edge	2.19	2.28	2.37	
		Falling edge	2.09	2.18	2.27	
V_{PVD2}	PVD threshold 2	Rising edge	2.28	2.38	2.48	
		Falling edge	2.18	2.28	2.38	
V_{PVD3}	PVD threshold 3	Rising edge	2.38	2.48	2.58	
		Falling edge	2.28	2.38	2.48	
V_{PVD4}	PVD threshold 4	Rising edge	2.47	2.58	2.69	
		Falling edge	2.37	2.48	2.59	
V_{PVD5}	PVD threshold 5	Rising edge	2.57	2.68	2.79	
		Falling edge	2.47	2.58	2.69	
V_{PVD6}	PVD threshold 6	Rising edge	2.66	2.78	2.9	
		Falling edge	2.56	2.68	2.8	
V_{PVD7}	PVD threshold 7	Rising edge	2.76	2.88	3	
		Falling edge	2.66	2.78	2.9	
$V_{PVDhyst}$(2)	PVD hysteresis	-	-	100	-	mV
IDD(PVD)	PVD current consumption	-	-	0.15	0.26	µA

1. Guaranteed by characterization results.
2. Guaranteed by design.

6.3.4 Embedded reference voltage

The parameters given in *Table 27* are derived from tests performed under ambient temperature and V_{DD} supply voltage conditions summarized in *Table 23*.

Table 27. Embedded internal reference voltage

Symbol	Parameter	Conditions	Min	Typ	Max	Unit
V_{REFINT}	Internal reference voltage	–40 °C < T_A < +105 °C	1.20	1.23	1.25	V
$T_{S_vrefint}$	ADC sampling time when reading the internal reference voltage	-	2.2	-	-	µs
V_{RERINT}	Internal reference voltage spread over the temperature range	V_{DD} = 3 V ±10 mV	-	-	10(1)	mV
T_{Coeff}	Temperature coefficient	-	-	-	100 (1)	ppm/°C

1. Guaranteed by design.

Table 28. Internal reference voltage calibration values

Calibration value name	Description	Memory address
V_{REFINT_CAL}	Raw data acquired at temperature of 30 °C V_{DDA}= 3.3 V	0x1FFF F7BA - 0x1FFF F7BB

6.3.5 Supply current characteristics

The current consumption is a function of several parameters and factors such as the operating voltage, ambient temperature, I/O pin loading, device software configuration, operating frequencies, I/O pin switching rate, program location in memory and executed binary code.
The current consumption is measured as described in *Figure 12: Current consumption measurement scheme*.
All Run-mode current consumption measurements given in this section are performed with a reduced code that gives a consumption equivalent to CoreMark code.

Note: The total current consumption is the sum of I_{DD} and I_{DDA}.

Typical and maximum current consumption

The MCU is placed under the following conditions:

- All I/O pins are in input mode with a static value at V_{DD} or V_{SS} (no load)
- All peripherals are disabled except when explicitly mentioned
- The Flash memory access time is adjusted to the f_{HCLK} frequency (0 wait state from 0 to 24 MHz,1 wait state from 24 to 48 MHz and 2 wait states from 48 to 72 MHz)
- Prefetch in ON (reminder: this bit must be set before clock setting and bus prescaling)
- When the peripherals are enabled $f_{PCLK2} = f_{HCLK}$ and $f_{PCLK1} = f_{HCLK/2}$
- When f_{HCLK} > 8 MHz, the PLL is ON and the PLL input is equal to HSI/2 (4 MHz) or HSE (8 MHz) in bypass mode.

The parameters given in *Table 29* to *Table 35* are derived from tests performed under ambient temperature and supply voltage conditions summarized in *Table 23*.

Table 29. Typical and maximum current consumption from VDD supply at VDD = 3.6V

Symbol	Parameter	Conditions	f_{HCLK}	All peripherals enabled				All peripherals disabled				Unit
				Typ	Max @ T_A(1)			Typ	Max @ T_A(1)			
					25 °C	85 °C	105 °C		25 °C	85 °C	105 °C	
I_{DD}	Supply current in Run mode, executing from Flash	External clock (HSE bypass)	72 MHz	45.7	48.6	50.0	52.0	25.5	27.5	28.1	28.8	mA
			64 MHz	40.6	43.6	44.5	46.4	22.7	24.6	25.2	25.9	
			48 MHz	30.8	33.6	34.1	35.5	17.3	19.0	19.5	20.0	
			32 MHz	21.0	22.9	23.5	25.6	11.7	13.2	13.7	14.1	
			24 MHz	16.0	16.8	18.0	18.9	9.0	10.4	10.8	11.4	
			8 MHz	5.4	5.6	6.1	7.2	3.3	3.3	3.8	4.2	
			1 MHz	1.1	1.2	1.7	2.7	0.8	0.9	1.3	1.6	
		Internal clock (HSI)	64 MHz	37.6	41.3	42.9	44.7	22.5	24.7	25.0	25.8	
			48 MHz	28.7	32.3	33.1	34.0	17.2	19.1	19.4	19.6	
			32 MHz	19.5	22.0	23.4	24.6	11.5	12.9	13.5	13.7	
			24 MHz	14.9	16.6	17.9	18.4	6.0	7.0	7.4	7.9	
			8 MHz	5.2	5.5	6.4	7.0	3.2	3.8	4.3	4.7	

Table 29. Typical and maximum current consumption from VDD supply at VDD = 3.6V (continued)

Symbol	Parameter	Conditions	f_{HCLK}	All peripherals enabled				All peripherals disabled				Unit
				Typ	Max @ T_A(1)			Typ	Max @ T_A(1)			
					25 °C	85 °C	105 °C		25 °C	85 °C	105 °C	
I_{DD}	Supply current in Run mode, executing from RAM	External clock (HSE bypass)	72 MHz	45.8	49.1(2)	50.1	51.4(2)	25.1	27.3(2)	28.0	28.6(2)	mA
			64 MHz	40.8	43.6	44.9	46.9	22.3	24.1	25.0	25.5	
			48 MHz	30.2	32.9	33.5	34.8	17.0	18.7	19.1	19.6	
			32 MHz	20.5	23.1	24.1	25.4	11.1	12.2	13.2	13.3	
			24 MHz	15.4	17.1	18.3	19.5	8.5	9.7	10.1	10.2	
			8 MHz	5.0	5.9	6.3	6.9	3.1	3.7	4.1	4.7	
			1 MHz	0.8	1.1	1.9	2.6	0.5	0.8	1.2	1.4	
		Internal clock (HSI)	64 MHz	37.3	41.1	41.8	43.3	22.0	23.8	24.4	24.9	
			48 MHz	28.0	31.1	31.6	33.2	16.4	18.0	18.3	18.6	
			32 MHz	18.8	21.3	22.1	23.1	10.9	11.9	12.8	13.1	
			24 MHz	14.2	15.9	16.8	17.9	5.5	6.4	6.7	7.3	
			8 MHz	4.8	5.1	6.0	6.5	2.9	3.5	4.1	4.2	
I_{DD}	Supply current in Sleep mode, executing from Flash or RAM	External clock (HSE bypass)	72 MHz	30.0	32.8(2)	33.1	34.1(2)	5.9	6.8(2)	6.9	7.4(2)	
			64 MHz	26.7	29.2	29.6	30.5	5.3	5.9	6.2	6.7	
			48 MHz	16.7	18.5	19.0	19.7	3.6	4.5	4.5	5.3	
			32 MHz	13.3	14.9	15.3	15.4	2.9	3.7	3.8	4.3	
			24 MHz	10.2	11.4	12.0	12.3	2.2	2.7	2.9	3.2	
			8 MHz	3.6	4.4	4.8	5.3	0.9	1.2	1.5	2.1	
			1 MHz	0.5	0.8	1.1	1.3	0.1	0.4	0.8	0.8	
		Internal clock (HSI)	64 MHz	23.2	25.3	25.6	26.2	5.0	5.7	6.1	6.2	mA
			48 MHz	17.5	19.2	19.4	19.9	3.9	4.7	4.8	5.3	
			32 MHz	11.7	12.9	13.2	13.3	2.6	3.4	3.6	4.2	
			24 MHz	8.9	10.2	10.6	10.8	1.4	2.1	2.4	2.7	
			8 MHz	3.4	4.0	4.6	5.1	0.7	1.1	1.4	1.9	

1. Guaranteed by characterization results.
2. Data based on characterization results and tested in production with code executing from RAM.

Table 30. Typical and maximum current consumption from the V_{DDA} supply

Symbol	Parameter	Conditions (1)	f_{HCLK}	V_{DDA} = 2.4 V				V_{DDA} = 3.6 V				Unit
				Typ	Max @ T_A(2)			Typ	Max @ T_A(2)			
					25 °C	85 °C	105 °C		25 °C	85 °C	105 °C	
I_{DDA}	Supply current in Run mode, code executing from Flash or RAM	HSE bypass	72 MHz	231	254(3)	266	271(3)	251	274(3)	294	300(3)	µA
			64 MHz	203	226	239	243	222	245	261	266	
			48 MHz	153	174	182	186	165	185	198	203	
			32 MHz	105	124	131	133	114	132	141	143	
			24 MHz	82	98	104	105	89	106	111	113	
			8 MHz	3.1	4.1	4.1	5.1	3.6	4.7	5.2	5.5	
			1 MHz	3.1	4.1	4.1	5.1	3.6	4.7	5.2	5.5	
		HSI clock	64 MHz	270	294	307	312	296	322	338	343	
			48 MHz	219	242	253	257	240	263	276	281	
			32 MHz	171	192	201	203	188	209	219	222	
			24 MHz	148	169	175	177	163	182	190	193	
			8 MHz	69	84	87	87	79	92	94	96	

1. Current consumption from the V_{DDA} supply is independent of whether the peripherals are on or off. Furthermore when the PLL is off, I_{DDA} is independent from the frequency.
2. Guaranteed by characterization results.
3. Data based on characterization results and tested in production with code executing from RAM.

Table 31. Typical and maximum V_{DD} consumption in Stop and Standby modes

Symbol	Parameter	Conditions	Typ @V_{DD} (V_{DD}=V_{DDA})						Max(1)			Unit
			2.0 V	2.4 V	2.7 V	3.0 V	3.3 V	3.6 V	T_A = 25 °C	T_A = 85 °C	T_A = 105 °C	
I_{DD}	Supply current in Stop mode	Regulator in run mode, all oscillators OFF	16.92	17.09	17.16	17.27	17.39	17.50	29.7	359.1	564.5	µA
		Regulator in low-power mode, all oscillators OFF	5.29	5.46	5.55	5.70	5.73	5.95	16.40	267.1	407.4	
	Supply current in Standby mode	LSI ON and IWDG ON	0.80	0.93	1.11	1.19	1.31	1.41	-	-	-	
		LSI OFF and IWDG OFF	0.63	0.76	0.84	0.95	1.02	1.10	5.00	6.30	12.60	

1. Guaranteed by characterization results.

Table 32. Typical and maximum V_{DDA} consumption in Stop and Standby modes

Symbol	Parameter	Conditions		Typ @V_{DD} (V_{DD} = V_{DDA})						Max(1)			Unit
				2.0 V	2.4 V	2.7 V	3.0 V	3.3 V	3.6 V	T_A = 25 °C	T_A = 85 °C	T_A = 105 °C	
I_{DDA}	Supply current in Stop mode	V_{DDA} supervisor ON	Regulator in run/low-power mode, all oscillators OFF	1.70	1.83	1.95	2.08	2.22	2.37	3.40	5.30	5.5	µA
	Supply current in Standby mode		LSI ON and IWDG ON	2.08	2.25	2.41	2.59	2.79	3.01	-	-	-	
			LSI OFF and IWDG OFF	1.59	1.72	1.83	1.96	2.10	2.25	2.80	2.90	3.60	
	Supply current in Stop mode	V_{DDA} supervisor OFF	Regulator in run/low-power mode, all oscillators OFF	0.99	1.01	1.04	1.09	1.14	1.21	-	-	-	
	Supply current in Standby mode		LSI ON and IWDG ON	1.36	1.43	1.50	1.60	1.72	1.85	-	-	-	
			LSI OFF and IWDG OFF	0.87	0.89	0.92	0.97	1.02	1.09	-	-	-	

1. Guaranteed by characterization results.

Table 33. Typical and maximum current consumption from V_{BAT} supply

Symbol	Para meter	Conditions (1)	Typ.@V_{BAT}								Max. @V_{BAT}= 3.6V(2) T_A (°C)			Unit
			1.65V	1.8V	2V	2.4V	2.7V	3V	3.3V	3.6V	25	85	105	
I_{DD_VBAT}	Backup domain supply current	LSE & RTC ON; “Xtal mode” lower driving capability; LSEDRV[1:0] = '00'	0.41	0.43	0.46	0.54	0.59	0.66	0.74	0.82	-	-	-	µA
		LSE & RTC ON; “Xtal mode” higher driving capability; LSEDRV[1:0] = '11'	0.65	0.68	0.73	0.80	0.87	0.95	1.03	1.14	-	-	-	

1. Crystal used: Abracon ABS07-120-32.768 kHz-T with a CL of 6 pF for typical values.
2. Guaranteed by characterization results.

Figure 13. Typical V_{BAT} current consumption (LSE and RTC ON/LSEDRV[1:0] = '00)

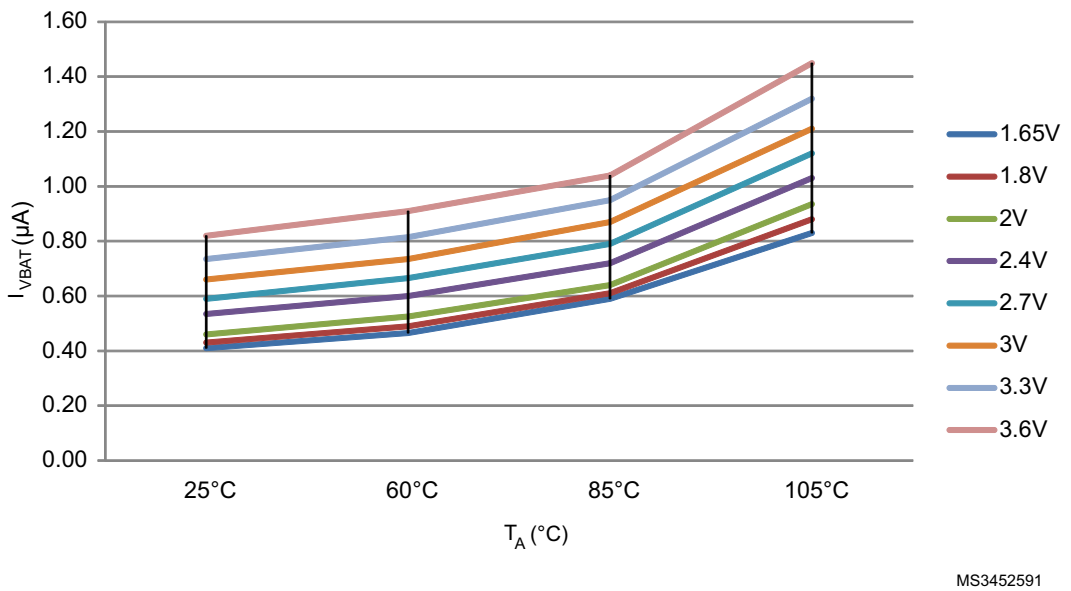

Typical current consumption

The MCU is placed under the following conditions:

- $V_{DD} = V_{DDA} = 3.3$ V
- All I/O pins available on each package are in analog input configuration
- The Flash access time is adjusted to f_{HCLK} frequency (0 wait states from 0 to 24 MHz, 1 wait state from 24 to 48 MHz and 2 wait states from 48 MHz to 72 MHz), and Flash prefetch is ON
- When the peripherals are enabled, $f_{APB1} = f_{AHB/2}$, $f_{APB2} = f_{AHB}$
- PLL is used for frequencies greater than 8 MHz
- AHB prescaler of 2, 4, 8,16 and 64 is used for the frequencies 4 MHz, 2 MHz, 1 MHz, 500 kHz and 125 kHz respectively.

Table 34. Typical current consumption in Run mode, code with data processing running from Flash

Symbol	Parameter	Conditions	f_{HCLK}	Typ		Unit
				Peripherals enabled	Peripherals disabled	
I_{DD}	Supply current in Run mode from V_{DD} supply	Running from HSE crystal clock 8 MHz, code executing from Flash	72 MHz	44.8	24.9	mA
			64 MHz	40.0	22.4	
			48 MHz	30.3	17.1	
			32 MHz	20.7	11.9	
			24 MHz	15.8	9.2	
			16 MHz	10.9	6.5	
			8 MHz	5.7	3.55	
			4 MHz	3.43	3.22	
			2 MHz	2.18	1.53	
			1 MHz	1.56	1.19	
			500 kHz	1.25	0.96	
			125 kHz	0.96	0.84	
I_{DDA}(1) (2)	Supply current in Run mode from V_{DDA} supply		72 MHz	237.1		µA
			64 MHz	208.3		
			48 MHz	154.3		
			32 MHz	105.0		
			24 MHz	81.3		
			16 MHz	57.8		
			8 MHz	1.15		
			4 MHz	1.15		
			2 MHz	1.15		
			1 MHz	1.15		
			500 kHz	1.15		
			125 kHz	1.15		

1. V_{DDA} supervisor is OFF.
2. When peripherals are enabled, the power consumption of the analog part of peripherals such as ADC, DAC, Comparators, OpAmp etc. is not included. Refer to the tables of characteristics in the subsequent sections.

Table 35. Typical current consumption in Sleep mode, code running from Flash or RAM

Symbol	Parameter	Conditions	f_{HCLK}	Typ		Unit
				Peripherals enabled	Peripherals disabled	
I_{DD}	Supply current in Sleep mode from V_{DD} supply	Running from HSE crystal clock 8 MHz, code executing from Flash or RAM	72 MHz	28.7	6.1	mA
			64 MHz	25.6	5.5	
			48 MHz	19.3	4.26	
			32 MHz	13.1	3.04	
			24 MHz	10.0	2.42	
			16 MHz	6.8	1.81	
			8 MHz	3.54	0.98	
			4 MHz	2.35	0.88	
			2 MHz	1.64	0.80	
			1 MHz	1.28	0.77	
			500 kHz	1.11	0.75	
			125 kHz	0.92	0.74	
I_{DDA}(1) (2)	Supply current in Sleep mode from V_{DDA} supply		72 MHz	237.1		µA
			64 MHz	208.3		
			48 MHz	154.3		
			32 MHz	105.0		
			24 MHz	81.3		
			16 MHz	57.8		
			8 MHz	1.15		
			4 MHz	1.15		
			2 MHz	1.15		
			1 MHz	1.15		
			500 kHz	1.15		
			125 kHz	1.15		

1. V_{DDA} supervisor is OFF.
2. When peripherals are enabled, the power consumption of the analog part of peripherals such as ADC, DAC, Comparators, OpAmp etc. is not included. Refer to the tables of characteristics in the subsequent sections.

I/O system current consumption

The current consumption of the I/O system has two components: static and dynamic.

I/O static current consumption

All the I/Os used as inputs with pull-up generate current consumption when the pin is externally held low. The value of this current consumption can be simply computed by using the pull-up/pull-down resistors values given in *Table 53: I/O static characteristics*.

For the output pins, any external pull-down or external load must also be considered to estimate the current consumption.

Additional I/O current consumption is due to I/Os configured as inputs if an intermediate voltage level is externally applied. This current consumption is caused by the input Schmitt trigger circuits used to discriminate the input value. Unless this specific configuration is required by the application, this supply current consumption can be avoided by configuring these I/Os in analog mode. This is notably the case of ADC input pins which should be configured as analog inputs.

Caution: Any floating input pin can also settle to an intermediate voltage level or switch inadvertently, as a result of external electromagnetic noise. To avoid current consumption related to floating pins, they must either be configured in analog mode, or forced internally to a definite digital value. This can be done either by using pull-up/down resistors or by configuring the pins in output mode.

I/O dynamic current consumption

In addition to the internal peripheral current consumption (see*Table 37: Peripheral current consumption*), the I/Os used by an application also contribute to the current consumption. When an I/O pin switches, it uses the current from the MCU supply voltage to supply the I/O pin circuitry and to charge/discharge the capacitive load (internal or external) connected to the pin:

$$I_{SW} = V_{DD} \times f_{SW} \times C$$

where

I_{SW} is the current sunk by a switching I/O to charge/discharge the capacitive load

V_{DD} is the MCU supply voltage

f_{SW} is the I/O switching frequency

C is the total capacitance seen by the I/O pin: $C = C_{INT} + C_{EXT} + C_S$

The test pin is configured in push-pull output mode and is toggled by software at a fixed frequency.

Table 36. Switching output I/O current consumption

Symbol	Parameter	Conditions[1]	I/O toggling frequency (f_{SW})	Typ	Unit
I_{SW}	I/O current consumption	V_{DD} = 3.3 V C_{ext} = 0 pF $C = C_{INT} + C_{EXT} + C_S$	2 MHz	0.90	mA
			4 MHz	0.93	
			8 MHz	1.16	
			18 MHz	1.60	
			36 MHz	2.51	
			48 MHz	2.97	
		V_{DD} = 3.3 V C_{ext} = 10 pF $C = C_{INT} + C_{EXT} + C_S$	2 MHz	0.93	
			4 MHz	1.06	
			8 MHz	1.47	
			18 MHz	2.26	
			36 MHz	3.39	
			48 MHz	5.99	
		V_{DD} = 3.3 V C_{ext} = 22 pF $C = C_{INT} + C_{EXT} + C_S$	2 MHz	1.03	
			4 MHz	1.30	
			8 MHz	1.79	
			18 MHz	3.01	
			36 MHz	5.99	
		V_{DD} = 3.3 V C_{ext} = 33 pF $C = C_{INT} + C_{EXT} + C_S$	2 MHz	1.10	
			4 MHz	1.31	
			8 MHz	2.06	
			18 MHz	3.47	
			36 MHz	8.35	
		V_{DD} = 3.3 V C_{ext} = 47 pF $C = C_{INT} + C_{EXT} + C_S$	2 MHz	1.20	
			4 MHz	1.54	
			8 MHz	2.46	
			18 MHz	4.51	

1. CS = 5 pF (estimated value).

On-chip peripheral current consumption

The MCU is placed under the following conditions:

- all I/O pins are in analog input configuration
- all peripherals are disabled unless otherwise mentioned
- the given value is calculated by measuring the current consumption
  - with all peripherals clocked off
  - with only one peripheral clocked on
- ambient operating temperature at 25°C and $V_{DD} = V_{DDA} = 3.3$ V.

Table 37. Peripheral current consumption

Peripheral	Typical consumption(1)	Unit
	I_{DD}	
BusMatrix (2)	11.3	µA/MHz
DMA1	6.7	
CRC	2.0	
GPIOA	8.5	
GPIOB	8.3	
GPIOC	8.6	
GPIOD	1.5	
GPIOF	1.0	
TSC	4.7	
ADC1	15.9	
APB2-Bridge (3)	2.7	
SYSCFG	3.2	
TIM1	27.6	
USART1	21.0	
TIM15	14.3	
TIM16	10.1	
TIM17	10.4	
APB1-Bridge (3)	5.8	
TIM2	40.7	
TIM6	7.4	
WWDG	4.6	
SPI2	35.2	
SPI3	34.2	
USART2	13.9	
USART3	13.1	
I2C1	9.4	
I2C2	9.4	
USB	17.4	
CAN	28.8	
PWR	4.5	
DAC	8.3	
I2C3	10.5	

1. The power consumption of the analog part (I_{DDA}) of peripherals such as ADC, DAC, Comparators, OpAmp etc. is not included. Refer to the tables of characteristics in the subsequent sections.
2. BusMatrix is automatically active when at least one master is ON (CPU or DMA1).
3. The APBx bridge is automatically active when at least one peripheral is ON on the same bus.

6.3.6 Wakeup time from low-power mode

The wakeup times given in *Table 38* are measured starting from the wakeup event trigger up to the first instruction executed by the CPU:

- For Stop or Sleep mode: the wakeup event is WFE.
- WKUP1 (PA0) pin is used to wakeup from Standby, Stop and Sleep modes.

All timings are derived from tests performed under ambient temperature and V_{DD} supply voltage conditions summarized in *Table 23*.

Table 38. Low-power mode wakeup timings

Symbol	Parameter	Conditions	Typ @V_{DD}, $V_{DD} = V_{DDA}$						Max	Unit
			2.0 V	2.4 V	2.7 V	3 V	3.3 V	3.6 V		
t_{WUSTOP}	Wakeup from Stop mode	Regulator in run mode	4.5	4.2	4.1	4.0	3.8	3.8	4.5	µs
		Regulator in low-power mode	8.2	7.0	6.4	6.0	5.7	5.5	9.0	
$t_{WUSTANDBY}$(1)	Wakeup from Standby mode	LSI and IWDG OFF	72.8	63.4	59.2	56.1	53.1	51.3	103	
$t_{WUSLEEP}$	Wakeup from Sleep mode	-	6						-	CPU clock cycles

1. Guaranteed by characterization results.

6.3.7 External clock source characteristics

High-speed external user clock generated from an external source

In bypass mode the HSE oscillator is switched off and the input pin is a standard GPIO. The external clock signal has to respect the I/O characteristics in *Section 6.3.14*. However, the recommended clock input waveform is shown in *Figure 14*.

Table 39. High-speed external user clock characteristics

Symbol	Parameter	Conditions	Min	Typ	Max	Unit
f_{HSE_ext}	User external clock source frequency(1)	-	1	8	32	MHz
V_{HSEH}	OSC_IN input pin high level voltage		$0.7V_{DD}$	-	V_{DD}	V
V_{HSEL}	OSC_IN input pin low level voltage		V_{SS}	-	$0.3V_{DD}$	
$t_{w(HSEH)}$ $t_{w(HSEL)}$	OSC_IN high or low time(1)		15	-	-	ns
$t_{r(HSE)}$ $t_{f(HSE)}$	OSC_IN rise or fall time(1)		-	-	20	

1. Guaranteed by design.

Figure 14. High-speed external clock source AC timing diagram

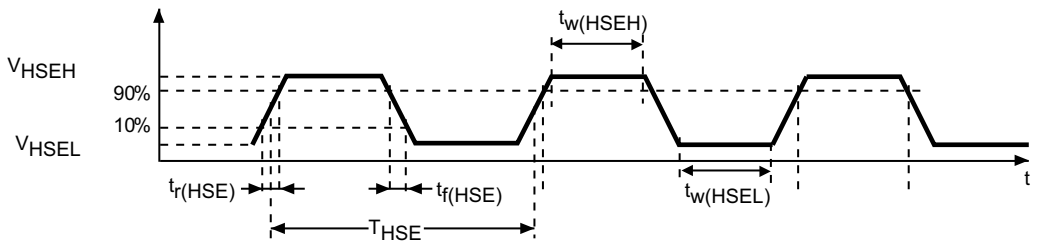

Low-speed external user clock generated from an external source

In bypass mode the LSE oscillator is switched off and the input pin is a standard GPIO. The external clock signal has to respect the I/O characteristics in *Section 6.3.14*. However, the recommended clock input waveform is shown in *Figure 15*

Table 40. Low-speed external user clock characteristics

Symbol	Parameter	Conditions	Min	Typ	Max	Unit
f_{LSE_ext}	User External clock source frequency(1)	-	-	32.768	1000	kHz
V_{LSEH}	OSC32_IN input pin high level voltage		$0.7V_{DD}$	-	V_{DD}	V
V_{LSEL}	OSC32_IN input pin low level voltage		V_{SS}	-	$0.3V_{DD}$	
$t_{w(LSEH)}$ $t_{w(LSEL)}$	OSC32_IN high or low time(1)		450	-	-	ns
$t_{r(LSE)}$ $t_{f(LSE)}$	OSC32_IN rise or fall time(1)		-	-	50	

1. Guaranteed by design.

Figure 15. Low-speed external clock source AC timing diagram

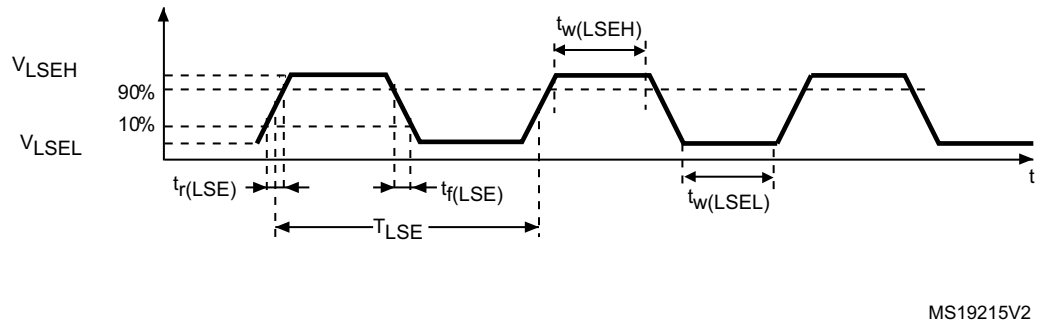

High-speed external clock generated from a crystal/ceramic resonator

The high-speed external (HSE) clock can be supplied with a 4 to 32 MHz crystal/ceramic resonator oscillator. All the information given in this paragraph are based on design simulation results obtained with typical external components specified in *Table 41*. In the application, the resonator and the load capacitors have to be placed as close as possible to the oscillator pins in order to minimize output distortion and startup stabilization time. Refer to the crystal resonator manufacturer for more details on the resonator characteristics (frequency, package, accuracy).

Table 41. HSE oscillator characteristics

Symbol	Parameter	Conditions[1]	Min[2]	Typ	Max[2]	Unit
f_{OSC_IN}	Oscillator frequency	-	4	8	32	MHz
R_F	Feedback resistor	-	-	200	-	kΩ
I_{DD}	HSE current consumption	During startup[3]	-	-	8.5	mA
		V_{DD}=3.3 V, Rm= 30Ω, CL=10 pF@8 MHz	-	0.4	-	
		V_{DD}=3.3 V, Rm= 45Ω, CL=10 pF@8 MHz	-	0.5	-	
		V_{DD}=3.3 V, Rm= 30Ω, CL= 5 pF@32 MHz	-	0.8	-	
		V_{DD}=3.3 V, Rm= 30Ω, CL=10 pF@32 MHz	-	1	-	
		V_{DD}=3.3 V, Rm= 30Ω, CL=20 pF@32 MHz	-	1.5	-	
g_m	Oscillator transconductance	Startup	10	-	-	mA/V
$t_{SU(HSE)}$[4]	Startup time	V_{DD} is stabilized	-	2	-	ms

1. Resonator characteristics given by the crystal/ceramic resonator manufacturer.
2. Guaranteed by design.
3. This consumption level occurs during the first 2/3 of the $t_{SU(HSE)}$ startup time.
4. $t_{SU(HSE)}$ is the startup time measured from the moment it is enabled (by software) to a stabilized 8 MHz oscillation is reached. This value is measured for a standard crystal resonator and it can vary significantly with the crystal manufacturer.

For C_{L1} and C_{L2}, it is recommended to use high-quality external ceramic capacitors in the 5 pF to 25 pF range (Typ.), designed for high-frequency applications, and selected to match the requirements of the crystal or resonator (see *Figure 16*). C_{L1} and C_{L2} are usually the same size. The crystal manufacturer typically specifies a load capacitance which is the series combination of C_{L1} and C_{L2}. PCB and MCU pin capacitance must be included (10 pF can be used as a rough estimate of the combined pin and board capacitance) when sizing C_{L1} and C_{L2}.

Note: For information on selecting the crystal, refer to the application note AN2867 "Oscillator design guide for ST microcontrollers" available from the ST website www.st.com.

Figure 16. Typical application with an 8 MHz crystal

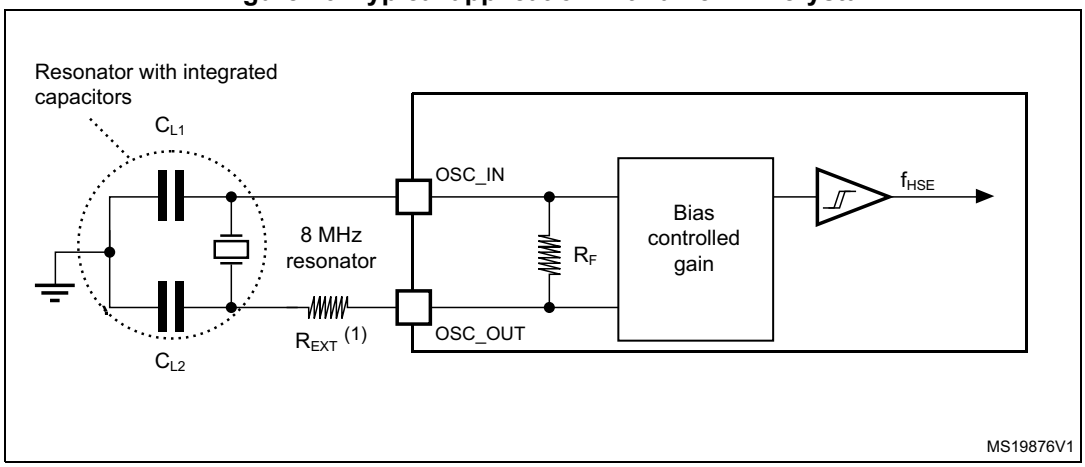

1. R_{EXT} value depends on the crystal characteristics.

Low-speed external clock generated from a crystal/ceramic resonator

The low-speed external (LSE) clock can be supplied with a 32.768 kHz crystal/ceramic resonator oscillator. All the information given in this paragraph are based on design simulation results obtained with typical external components specified in *Table 42*. In the application, the resonator and the load capacitors have to be placed as close as possible to the oscillator pins in order to minimize output distortion and startup stabilization time. Refer to the crystal resonator manufacturer for more details on the resonator characteristics (frequency, package, accuracy).

Table 42. LSE oscillator characteristics (f_{LSE} = 32.768 kHz)

Symbol	Parameter	Conditions[1]	Min[2]	Typ	Max[2]	Unit
I_{DD}	LSE current consumption	LSEDRV[1:0]=00 lower driving capability	-	0.5	0.9	µA
		LSEDRV[1:0]=10 medium low driving capability	-	-	1	
		LSEDRV[1:0]=01 medium high driving capability	-	-	1.3	
		LSEDRV[1:0]=11 higher driving capability	-	-	1.6	
g_m	Oscillator transconductance	LSEDRV[1:0]=00 lower driving capability	5	-	-	µA/V
		LSEDRV[1:0]=10 medium low driving capability	8	-	-	
		LSEDRV[1:0]=01 medium high driving capability	15	-	-	
		LSEDRV[1:0]=11 higher driving capability	25	-	-	
$t_{SU(LSE)}$[3]	Startup time	V_{DD} is stabilized	-	2	-	s

1. Refer to the note and caution paragraphs below the table, and to the application note AN2867 “Oscillator design guide for ST microcontrollers”.
2. Guaranteed by design.
3. $t_{SU(LSE)}$ is the startup time measured from the moment it is enabled (by software) to a stabilized 32.768 kHz oscillation is reached. This value is measured for a standard crystal and it can vary significantly with the crystal manufacturer.

Note: For information on selecting the crystal, refer to the application note AN2867 “Oscillator design guide for ST microcontrollers” available from the ST website www.st.com.

Figure 17. Typical application with a 32.768 kHz crystal

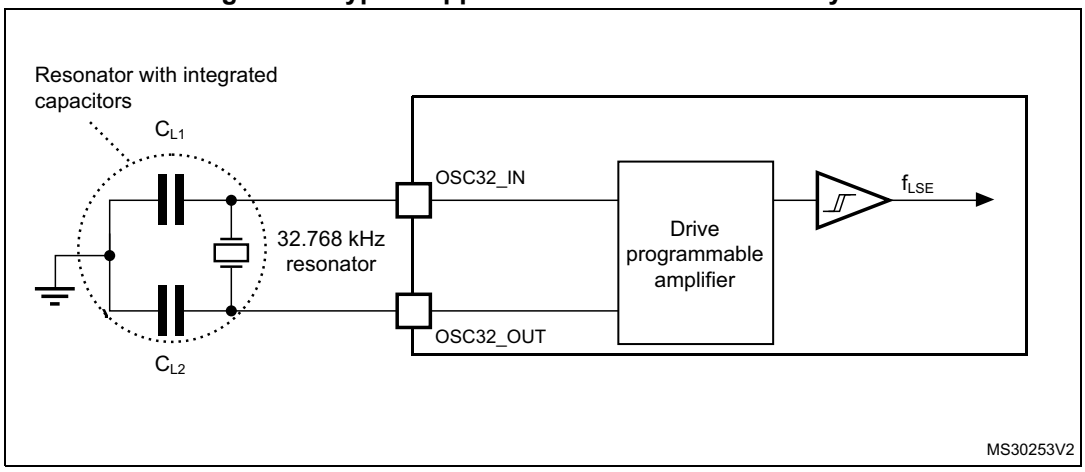

Note: An external resistor is not required between OSC32_IN and OSC32_OUT and it is forbidden to add one.

6.3.8 Internal clock source characteristics

The parameters given in *Table 43* are derived from tests performed under ambient temperature and supply voltage conditions summarized in *Table 23*.

High-speed internal (HSI) RC oscillator

Table 43. HSI oscillator characteristics(1)

Symbol	Parameter	Conditions	Min	Typ	Max	Unit
f_{HSI}	Frequency	-	-	8	-	MHz
TRIM	HSI user trimming step	-	-	-	1(2)	%
$DuCy_{(HSI)}$	Duty cycle	-	45(2)	-	55(2)	%
ACC_{HSI}	Accuracy of the HSI oscillator	T_A = -40 to 105°C	-2.8(3)	-	3.8(3)	%
		T_A = -10 to 85°C	-1.9(3)	-	2.3(3)	
		T_A = 0 to 85°C	-1.9(3)	-	2(3)	
		T_A = 0 to 70°C	-1.3(3)	-	2(3)	
		T_A = 0 to 55°C	-1(3)	-	2(3)	
		T_A = 25°C(4)	-1	-	1	
$t_{su(HSI)}$	HSI oscillator startup time	-	1(2)	-	2(2)	µs
$I_{DDA(HSI)}$	HSI oscillator power consumption	-	-	80	100(2)	µA

1. V_{DDA} = 3.3 V, T_A = –40 to 105 °C unless otherwise specified.
2. Guaranteed by design.
3. Guaranteed by characterization results.
4. Factory calibrated, parts not soldered.

Figure 18. HSI oscillator accuracy characterization results for soldered parts

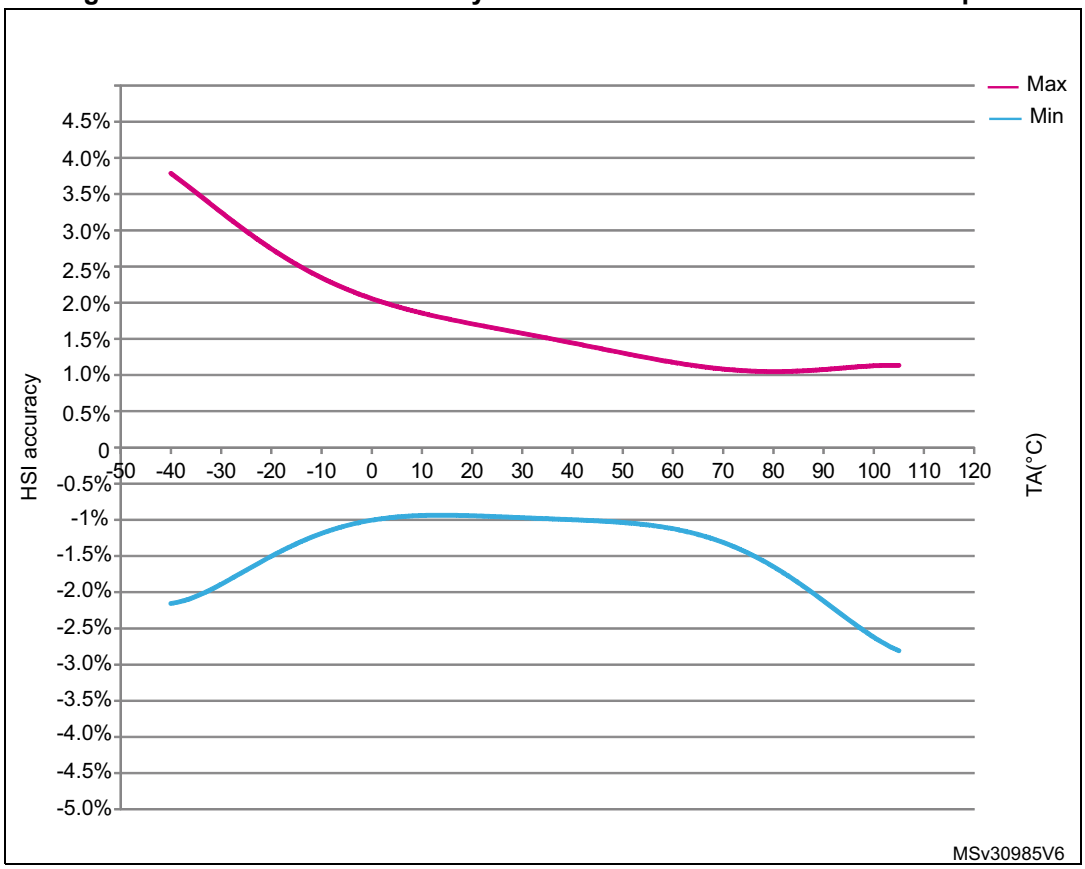

Low-speed internal (LSI) RC oscillator

Table 44. LSI oscillator characteristics(1)

Symbol	Parameter	Min	Typ	Max	Unit
f_{LSI}	Frequency	30	40	50	kHz
$\Delta^{f}LSI(T)$	Temperature-related frequency drift(2)	-9	-	9	%
$t_{su(LSI)}$(3)	LSI oscillator startup time	-	-	85	µs
$I_{DD(LSI)}$(3)	LSI oscillator power consumption	-	0.75	1.2	µA

1. V_{DDA} = 3.3 V, T_A = –40 to 105 °C unless otherwise specified.
2. Guaranteed by characterization results.
3. Guaranteed by design.

6.3.9 PLL characteristics

The parameters given in *Table 45* are derived from tests performed under ambient temperature and supply voltage conditions summarized in *Table 23*.

Table 45. PLL characteristics

Symbol	Parameter	Value			Unit
		Min	Typ	Max	
f_{PLL_IN}	PLL input clock(1)	1(2)	-	24(2)	MHz
	PLL input clock duty cycle	40(2)	-	60(2)	%
f_{PLL_OUT}	PLL multiplier output clock	16(2)	-	72	MHz
t_{LOCK}	PLL lock time	-	-	200(2)	µs
Jitter	Cycle-to-cycle jitter	-	-	300(2)	ps

1. Take care of using the appropriate multiplier factors so as to have PLL input clock values compatible with the range defined by f_{PLL_OUT}.
2. Guaranteed by design.

6.3.10 Memory characteristics

Flash memory

The characteristics are given at T_A = –40 to 105 °C unless otherwise specified.

Table 46. Flash memory characteristics

Symbol	Parameter	Conditions	Min	Typ	Max(1)	Unit
t_{prog}	16-bit programming time	T_A = –40 to +105 °C	40	53.5	60	µs
t_{ERASE}	Page (2 Kbytes) erase time	T_A = –40 to +105 °C	20	-	40	ms
t_{ME}	Mass erase time	T_A = –40 to +105 °C	20	-	40	ms
I_{DD}	Supply current	Write mode	-	-	10	mA
		Erase mode	-	-	12	mA

1. Guaranteed by design.

Table 47. Flash memory endurance and data retention

Symbol	Parameter	Conditions	Value	Unit
			Min(1)	
N_{END}	Endurance	T_A = –40 to +85 °C (6 suffix versions) T_A = –40 to +105 °C (7 suffix versions)	10	kcycles
t_{RET}	Data retention	1 kcycle(2) at T_A = 85 °C	30	Years
		1 kcycle(2) at T_A = 105 °C	10	
		10 kcycles(2) at T_A = 55 °C	20	

1. Guaranteed by characterization results.
2. Cycling performed over the whole temperature range.

6.3.11 EMC characteristics

Susceptibility tests are performed on a sample basis during device characterization.

Functional EMS (electromagnetic susceptibility)

While a simple application is executed on the device (toggling 2 LEDs through I/O ports). the device is stressed by two electromagnetic events until a failure occurs. The failure is indicated by the LEDs:

- **Electrostatic discharge (ESD)** (positive and negative) is applied to all device pins until a functional disturbance occurs. This test is compliant with the IEC 61000-4-2 standard.
- **FTB**: A Burst of Fast Transient voltage (positive and negative) is applied to V_{DD} and V_{SS} through a 100 pF capacitor, until a functional disturbance occurs. This test is compliant with the IEC 61000-4-4 standard.

A device reset allows normal operations to be resumed.

The test results are given in *Table 48*. They are based on the EMS levels and classes defined in application note AN1709.

Table 48. EMS characteristics

Symbol	Parameter	Conditions	Level/ Class
V_{FESD}	Voltage limits to be applied on any I/O pin to induce a functional disturbance	V_{DD} = 3.3 V, LQFP64, T_A = +25°C, f_{HCLK} = 72 MHz conforms to IEC 61000-4-2	2B
V_{EFTB}	Fast transient voltage burst limits to be applied through 100 pF on V_{DD} and V_{SS} pins to induce a functional disturbance	V_{DD} = 3.3 V, LQFP64, T_A = +25°C, f_{HCLK} = 72 MHz conforms to IEC 61000-4-4	4A

Designing hardened software to avoid noise problems

EMC characterization and optimization are performed at component level with a typical application environment and simplified MCU software. It should be noted that good EMC performance is highly dependent on the user application and the software in particular.

Therefore it is recommended that the user applies EMC software optimization and prequalification tests in relation with the EMC level requested for his application.

Software recommendations

The software flowchart must include the management of runaway conditions such as:

- Corrupted program counter
- Unexpected reset
- Critical Data corruption (control registers etc.)

Prequalification trials

Most of the common failures (unexpected reset and program counter corruption) can be reproduced by manually forcing a low state on the NRST pin or the Oscillator pins for one second.

To complete these trials, ESD stress can be applied directly on the device, over the range of specification values. When unexpected behavior is detected, the software can be hardened to prevent unrecoverable errors occurring (see application note AN1015).

Electromagnetic Interference (EMI)

The electromagnetic field emitted by the device are monitored while a simple application is executed (toggling 2 LEDs through the I/O ports). This emission test is compliant with IEC 61967-2 standard which specifies the test board and the pin loading.

Table 49. EMI characteristics

Symbol	Parameter	Conditions	Monitored frequency band	Max vs. [f_{HSE}/f_{HCLK}]	Unit
				8/72 MHz	
S_{EMI}	Peak level	V_{DD} = 3.3 V, T_A = 25 °C, LQFP64 package compliant with IEC 61967-2	0.1 to 30 MHz	5	dBµV
			30 to 130 MHz	6	
			130 MHz to 1GHz	28	
			SAE EMI Level	4	-

6.3.12 Electrical sensitivity characteristics

Based on three different tests (ESD, LU) using specific measurement methods, the device is stressed in order to determine its performance in terms of electrical sensitivity.

Electrostatic discharge (ESD)

Electrostatic discharges (a positive then a negative pulse separated by 1 second) are applied to the pins of each sample according to each pin combination. The sample size depends on the number of supply pins in the device (3 parts × (n+1) supply pins). This test conforms to the JESD22-A114/C101 standard.

Table 50. ESD absolute maximum ratings

Symbol	Ratings	Conditions	Packages	Class	Maximum value(1)	Unit
$V_{ESD(HBM)}$	Electrostatic discharge voltage (human body model)	T_A = +25 °C, conforming to JESD22-A114	All	2	2000	V
$V_{ESD(CDM)}$	Electrostatic discharge voltage (charge device model)	T_A = +25 °C, conforming to ANSI/ESD STM5.3.1	LQFP64, WLCSP49	C3	250	V
			All other	C4	500	

1. Guaranteed by characterization results.

Static latch-up

Two complementary static tests are required on six parts to assess the latch-up performance:

- A supply overvoltage is applied to each power supply pin
- A current injection is applied to each input, output and configurable I/O pin

These tests are compliant with EIA/JESD 78A IC latch-up standard.

Table 51. Electrical sensitivities

Symbol	Parameter	Conditions	Class
LU	Static latch-up class	T_A = +105 °C conforming to JESD78A	2 level A

6.3.13 I/O current injection characteristics

As a general rule, current injection to the I/O pins, due to external voltage below V_{SS} or above V_{DD} (for standard, 3 V-capable I/O pins) should be avoided during normal product operation. However, in order to give an indication of the robustness of the microcontroller in cases when abnormal injection accidentally happens, susceptibility tests are performed on a sample basis during device characterization.

Functional susceptibility to I/O current injection

While a simple application is executed on the device, the device is stressed by injecting current into the I/O pins programmed in floating input mode. While current is injected into the I/O pin, one at a time, the device is checked for functional failures.

The failure is indicated by an out of range parameter: ADC error above a certain limit (higher than 5 LSB TUE), out of conventional limits of induced leakage current on adjacent pins (out of –5 µA/+0 µA range), or other functional failure (for example reset occurrence or oscillator frequency deviation).

The test results are given in *Table 52*

Table 52. I/O current injection susceptibility

Symbol	Description	Functional susceptibility		Unit
		Negative injection	Positive injection	
I_{INJ}	Injected current on BOOT0	-0	NA(1)	mA
	Injected current on PC0 pin (TTa pin)	-0	+5	
	Injected current PC0, PC1, PC2, PC3, PA0, PA1, PA2, PA3, PA4, PA6, PA7, PC4, PB0, PB10, PB11, PB13 with induced leakage current on other pins from this group less than -100 µA or more than +100 µA	-5	+5	
	Injected current on any other TT, FT and FTf pins	-5	NA(1)	
	Injected current on all other TC, TTa and RESET pins	-5	+5	

1. Injection is not possible.

Note: It is recommended to add a Schottky diode (pin to ground) to analog pins which may potentially inject negative currents.

6.3.14 I/O port characteristics

General input/output characteristics

Unless otherwise specified, the parameters given in *Table 53* are derived from tests performed under the conditions summarized in *Table 23*. All I/Os are CMOS and TTL compliant.

Table 53. I/O static characteristics

Symbol	Parameter	Conditions	Min	Typ	Max	Unit
V_{IL}	Low level input voltage	TTa and TT I/O	-	-	$0.3\ V_{DD} + 0.07$ (1)	V
		FT and FTf I/O	-	-	$0.475\ V_{DD} - 0.2$ (1)	
		BOOT0 I/O	-	-	$0.3\ V_{DD} – 0.3$ (1)	
		All I/Os except BOOT0	-	-	$0.3\ V_{DD}$ (2)	
V_{IH}	High level input voltage	TTa and TT I/O	$0.445\ V_{DD}+0.398$ (1)	-	-	V
		FT and FTf I/O	$0.5\ V_{DD}+0.2$ (1)	-	-	
		BOOT0	$0.2\ V_{DD}+0.95$ (1)	-	-	
		All I/Os except BOOT0	$0.7\ V_{DD}$ (2)	-	-	
V_{hys}	Schmitt trigger hysteresis	TC and TTa I/O	-	200 (1)	-	mV
		FT and FTf I/O	-	100 (1)	-	
		BOOT0	-	300 (1)	-	
I_{lkg}	Input leakage current (3)	TC, FT and FTf I/O TTa I/O in digital mode $V_{SS} \le V_{IN} \le V_{DD}$	-	-	±0.1	µA
		TTa I/O in digital mode $V_{DD} \le V_{IN} \le V_{DDA}$	-	-	1	
		TTa I/O in analog mode $V_{SS} \le V_{IN} \le V_{DDA}$	-	-	±0.2	
		FT and FTf I/O(4) $V_{DD} \le V_{IN} \le 5$ V	-	-	10	
R_{PU}	Weak pull-up equivalent resistor(5)	$V_{IN} = V_{SS}$	25	40	55	kΩ
R_{PD}	Weak pull-down equivalent resistor(5)	$V_{IN} = V_{DD}$	25	40	55	kΩ
C_{IO}	I/O pin capacitance	-	-	5	-	pF

1. Data based on design simulation
2. Tested in production.
3. Leakage could be higher than the maximum value. if negative current is injected on adjacent pins. Refer to *Table 52: I/O current injection susceptibility*.
4. To sustain a voltage higher than V_{DD} +0.3 V, the internal pull-up/pull-down resistors must be disabled.

5. Pull-up and pull-down resistors are designed with a true resistance in series with a switchable PMOS/NMOS. This PMOS/NMOS contribution to the series resistance is minimum (~10% order).

All I/Os are CMOS and TTL compliant (no software configuration required). Their characteristics cover more than the strict CMOS-technology or TTL parameters. The coverage of these requirements is shown in *Figure 19* and *Figure 20* for standard I/Os.

Figure 19. TC and TTa I/O input characteristics - CMOS port

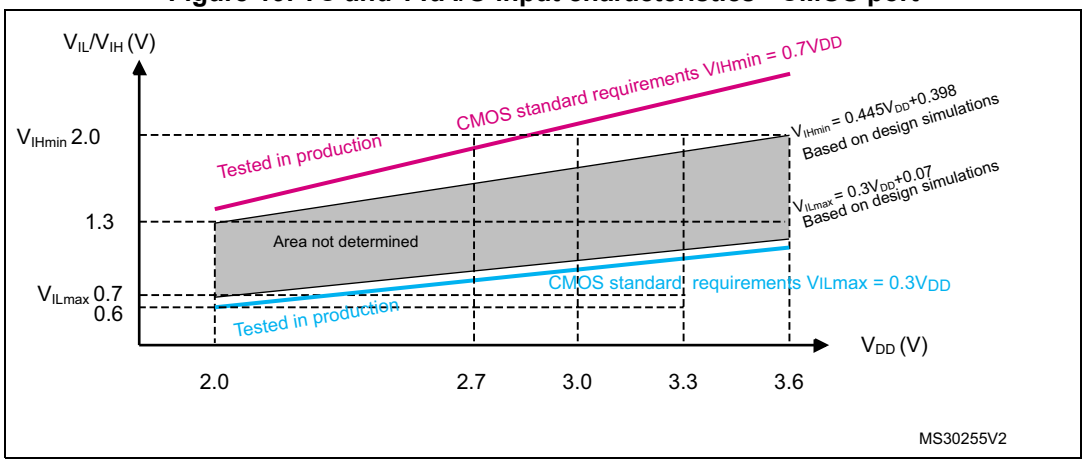

Figure 20. TC and TTa I/O input characteristics - TTL port

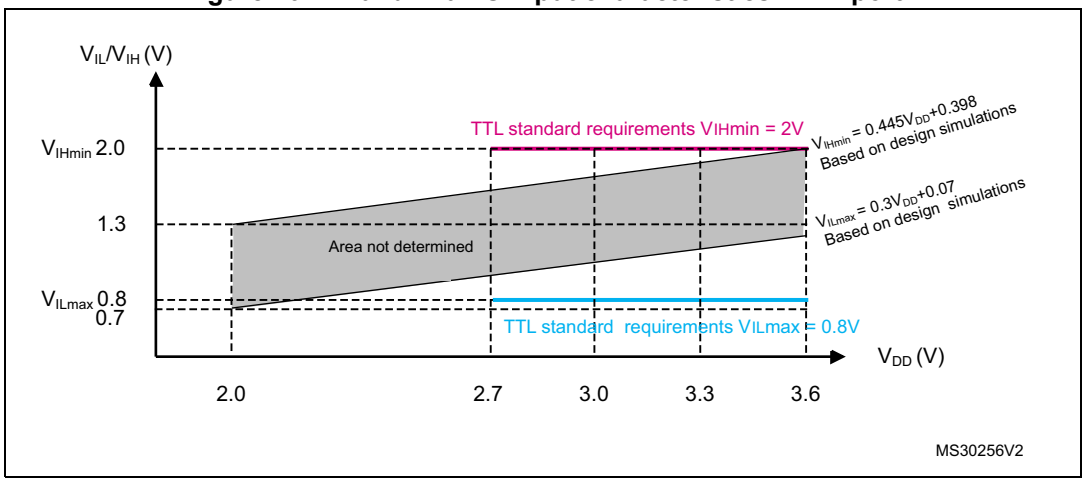

Figure 21. Five volt tolerant (FT and FTf) I/O input characteristics - CMOS port

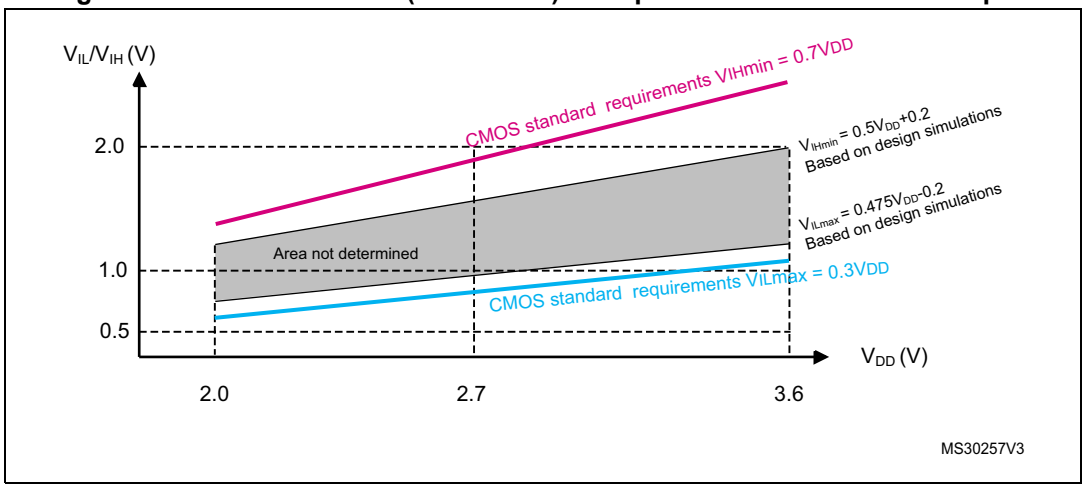

Figure 22. Five volt tolerant (FT and FTf) I/O input characteristics - TTL port

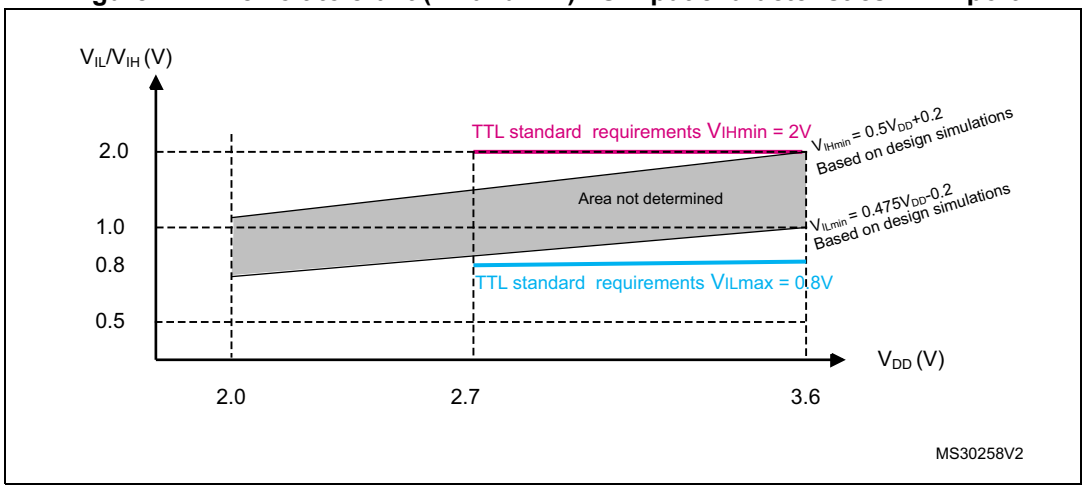

Output driving current

The GPIOs (general purpose input/outputs) can sink or source up to +/-8 mA, and sink or source up to +/- 20 mA (with a relaxed V_{OL}/V_{OH}).

In the user application, the number of I/O pins which can drive current must be limited to respect the absolute maximum rating specified in *Section 6.2*:

- The sum of the currents sourced by all the I/Os on $V_{DD,}$ plus the maximum Run consumption of the MCU sourced on $V_{DD,}$ cannot exceed the absolute maximum rating ΣI_{VDD} (see *Table 21*).
- The sum of the currents sunk by all the I/Os on V_{SS} plus the maximum Run consumption of the MCU sunk on V_{SS} cannot exceed the absolute maximum rating ΣI_{VSS} (see *Table 21*).

Output voltage levels

Unless otherwise specified, the parameters given in *Table 54* are derived from tests performed under ambient temperature and V_{DD} supply voltage conditions summarized in *Table 23*. All I/Os (FT, TTa and TC unless otherwise specified) are CMOS and TTL compliant.

Table 54. Output voltage characteristics

Symbol	Parameter	Conditions	Min	Max	Unit
V_{OL}(1)	Output low level voltage for an I/O pin	CMOS port(2) I_{IO} = +8 mA 2.7 V < V_{DD} < 3.6 V	-	0.4	V
V_{OH}(3)	Output high level voltage for an I/O pin		V_{DD}–0.4	-	
V_{OL} (1)	Output low level voltage for an I/O pin	TTL port(2) I_{IO} = +8 mA 2.7 V < V_{DD} < 3.6 V	-	0.4	
V_{OH} (3)	Output high level voltage for an I/O pin		2.4	-	
V_{OL}(1)(4)	Output low level voltage for an I/O pin	I_{IO} = +20 mA 2.7 V < V_{DD} < 3.6 V	-	1.3	
V_{OH}(3)(4)	Output high level voltage for an I/O pin		V_{DD}–1.3	-	
V_{OL}(1)(4)	Output low level voltage for an I/O pin	I_{IO} = +6 mA 2 V < V_{DD} < 2.7 V	-	0.4	
V_{OH}(3)(4)	Output high level voltage for an I/O pin		V_{DD}–0.4	-	
V_{OLFM+}(1)(4)	Output low level voltage for an FTf I/O pin in FM+ mode	I_{IO} = +20 mA 2.7 V < V_{DD} < 3.6 V	-	0.4	

1. The I_{IO} current sunk by the device must always respect the absolute maximum rating specified in *Table 21* and the sum of I_{IO} (I/O ports and control pins) must not exceed $\Sigma I_{IO(PIN)}$.
2. TTL and CMOS outputs are compatible with JEDEC standards JESD36 and JESD52.
3. The I_{IO} current sourced by the device must always respect the absolute maximum rating specified in *Table 21* and the sum of I_{IO} (I/O ports and control pins) must not exceed $\Sigma I_{IO(PIN)}$.
4. Data based on design simulation.

Input/output AC characteristics

The definition and values of input/output AC characteristics are given in *Figure 23* and *Table 55*, respectively.

Unless otherwise specified, the parameters given are derived from tests performed under ambient temperature and V_{DD} supply voltage conditions summarized in *Table 23*.

Table 55. I/O AC characteristics(1)

OSPEEDRy [1:0] value(1)	Symbol	Parameter	Conditions	Min	Max	Unit
x0	$f_{max(IO)out}$	Maximum frequency(2)	C_L = 50 pF, V_{DD} = 2 V to 3.6 V	-	2(3)	MHz
	$t_{f(IO)out}$	Output high to low level fall time	C_L = 50 pF, V_{DD} = 2 V to 3.6 V	-	125(3)	ns
	$t_{r(IO)out}$	Output low to high level rise time		-	125(3)	
01	$f_{max(IO)out}$	Maximum frequency(2)	C_L = 50 pF, V_{DD} = 2 V to 3.6 V	-	10(3)	MHz
	$t_{f(IO)out}$	Output high to low level fall time	C_L = 50 pF, V_{DD} = 2 V to 3.6 V	-	25(3)	ns
	$t_{r(IO)out}$	Output low to high level rise time		-	25(3)	
11	$f_{max(IO)out}$	Maximum frequency(2)	C_L = 30 pF, V_{DD} = 2.7 V to 3.6 V	-	50(3)	MHz
			C_L = 50 pF, V_{DD} = 2.7 V to 3.6 V	-	30(3)	MHz
			C_L = 50 pF, V_{DD} = 2 V to 2.7 V	-	20(3)	MHz
	$t_{f(IO)out}$	Output high to low level fall time	C_L = 30 pF, V_{DD} = 2.7 V to 3.6 V	-	5(3)	ns
			C_L = 50 pF, V_{DD} = 2.7 V to 3.6 V	-	8(3)	
			C_L = 50 pF, V_{DD} = 2 V to 2.7 V	-	12(3)	
	$t_{r(IO)out}$	Output low to high level rise time	C_L = 30 pF, V_{DD} = 2.7 V to 3.6 V	-	5(3)	
			C_L = 50 pF, V_{DD} = 2.7 V to 3.6 V	-	8(3)	
			C_L = 50 pF, V_{DD} = 2 V to 2.7 V	-	12(3)	
FM+ configuration(4)	$f_{max(IO)out}$	Maximum frequency(2)	C_L = 50 pF, V_{DD} = 2 V to 3.6 V	-	2(4)	MHz
	$t_{f(IO)out}$	Output high to low level fall time		-	12(4)	ns
	$t_{r(IO)out}$	Output low to high level rise time		-	34(4)	
-	t_{EXTIpw}	Pulse width of external signals detected by the EXTI controller	-	10	-‘	ns

1. The I/O speed is configured using the OSPEEDRx[1:0] bits. Refer to the RM0365 reference manual for a description of GPIO Port configuration register.
2. The maximum frequency is defined in *Figure 23*.
3. Guaranteed by design.
4. The I/O speed configuration is bypassed in FM+ I/O mode. Refer to the STM32F302x6 STM32F302x8 reference manual RM0365 for a description of FM+ I/O mode configuration.

Figure 23. I/O AC characteristics definition

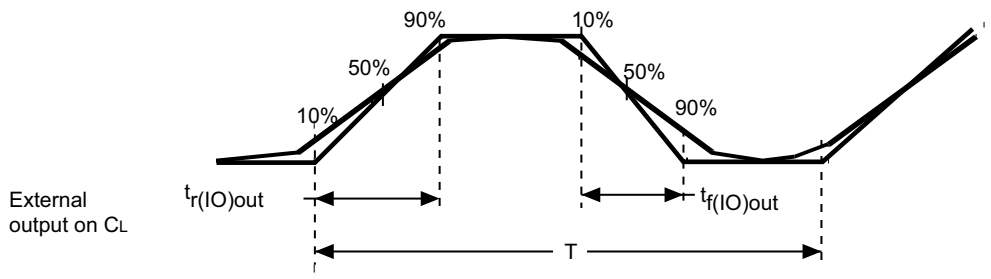

Maximum frequency is achieved if $(t_r + t_f) \leq 2/3)T$ and if the duty cycle is (45-55%) when loaded by C_L (see note 1).

MS34942V1

1. See *Table 55: I/O AC characteristics*.

6.3.15 NRST pin characteristics

The NRST pin input driver uses CMOS technology. It is connected to a permanent pull-up resistor, R_{PU} (see *Table 53*).

Unless otherwise specified, the parameters given in *Table 56* are derived from tests performed under ambient temperature and V_{DD} supply voltage conditions summarized in *Table 23*.

Table 56. NRST pin characteristics

Symbol	Parameter	Conditions	Min	Typ	Max	Unit
$V_{IL(NRST)}$(1)	NRST Input low level voltage	-	-	-	$0.3V_{DD}$+ 0.07(1)	V
$V_{IH(NRST)}$(1)	NRST Input high level voltage	-	$0.445V_{DD}$+ 0.398(1)	-	-	
$V_{hys(NRST)}$	NRST Schmitt trigger voltage hysteresis	-	-	200	-	mV
R_{PU}	Weak pull-up equivalent resistor(2)	$V_{IN} = V_{SS}$	25	40	55	kΩ
$V_{F(NRST)}$(1)	NRST Input filtered pulse	-	-	-	100(1)	ns
$V_{NF(NRST)}$(1)	NRST Input not filtered pulse	-	500(1)	-	-	ns

1. Guaranteed by design.
2. The pull-up is designed with a true resistance in series with a switchable PMOS. This PMOS contribution to the series resistance must be minimum (~10% order).

Figure 24. Recommended NRST pin protection

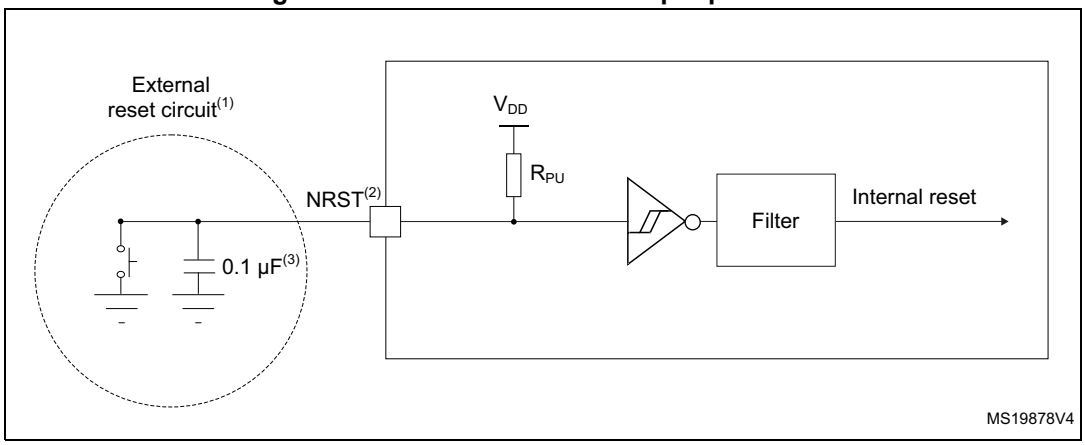

1. The reset network protects the device against parasitic resets. 0.1 uF capacitor must be placed as close as possible to the chip.
2. The user must ensure that the level on the NRST pin can go below the $V_{IL(NRST)}$ max level specified in *Table 56*. Otherwise the reset is not taken into account by the device.
3. The user must place the external capacitor on NRST as close as possible to the chip.

6.3.16 Timer characteristics

The parameters given in *Table 57* are guaranteed by design.

Refer to *Section 6.3.14: I/O port characteristics* for details on the input/output alternate function characteristics (output compare, input capture, external clock, PWM output).

Table 57. TIMx(1)(2) characteristics

Symbol	Parameter	Conditions	Min	Max	Unit
$t_{res(TIM)}$	Timer resolution time	-	1	-	$t_{TIMxCLK}$
		$f_{TIMxCLK}$ = 72 MHz	13.9	-	ns
		$f_{TIMxCLK}$ = 144 MHz, x = 1, 15,16, 17	6.95	-	ns
f_{EXT}	Timer external clock frequency on CH1 to CH4	-	0	$f_{TIMxCLK}/2$	MHz
		$f_{TIMxCLK}$ = 72 MHz	0	36	MHz
Res_{TIM}	Timer resolution	TIMx (except TIM2)	-	16	bit
		TIM2	-	32	
$t_{COUNTER}$	16-bit counter clock period	-	1	65536	$t_{TIMxCLK}$
		$f_{TIMxCLK}$ = 72 MHz	0.0139	910	µs
		$f_{TIMxCLK}$ = 144 MHz, x= 1/15/16/17	0.0069	455	µs
t_{MAX_COUNT}	Maximum possible count with 32-bit counter	-	-	65536 × 65536	$t_{TIMxCLK}$
		$f_{TIMxCLK}$ = 72 MHz	-	59.65	s
		$f_{TIMxCLK}$ = 144 MHz, x= 1/15/16/17	-	29.825	s

1. TIMx is used as a general term to refer to the TIM1, TIM2, TIM15, TIM16 and TIM17 timers.
2. Guaranteed by design.

Table 58. IWDG min/max timeout period at 40 kHz (LSI)(1)

Prescaler divider	PR[2:0] bits	Min timeout (ms) RL[11:0]= 0x000	Max timeout (ms) RL[11:0]= 0xFFF
/4	0	0.1	409.6
/8	1	0.2	819.2
/16	2	0.4	1638.4
/32	3	0.8	3276.8
/64	4	1.6	6553.6
/128	5	3.2	13107.2
/256	7	6.4	26214.4

1. These timings are given for a 40 kHz clock but the microcontroller internal RC frequency can vary from 30 to 50 kHz. Moreover, given an exact RC oscillator frequency, the exact timings still depend on the phasing of the APB interface clock versus the LSI clock so that there is always a full RC period of uncertainty.

Table 59. WWDG min/max timeout value @72 MHz (PCLK)(1)

Prescaler	WDGTB	Min timeout value	Max timeout value
1	0	0.05687	3.6409
2	1	0.1137	7.2817
4	2	0.2275	14.564
8	3	0.4551	29.127

1. Guaranteed by design.

6.3.17 Communications interfaces

I²C interface characteristics

The I2C interface meets the timings requirements of the I²C-bus specification and user manual rev. 03 for:

- Standard-mode (Sm): with a bit rate up to 100 kbit/s
- Fast-mode (Fm): with a bit rate up to 400 kbit/s
- Fast-mode Plus (Fm+): with a bit rate up to 1 Mbit/s.

The I2C timings requirements are guaranteed by design when the I2C peripheral is properly configured (refer to Reference manual).

The SDA and SCL I/O requirements are met with the following restrictions: the SDA and SCL I/O pins are not “true” open-drain. When configured as open-drain, the PMOS connected between the I/O pin and VDDIOx is disabled, but is still present. Only FTf I/O pins support Fm+ low level output current maximum requirement. Refer to *Section 6.3.14: I/O port characteristics* for the I2C I/Os characteristics.

All I2C SDA and SCL I/Os embed an analog filter. Refer to the table below for the analog filter characteristics.

Table 60. I2C analog filter characteristics(1)

Symbol	Parameter	Min	Max	Unit
t_{AF}	Maximum pulse width of spikes that are suppressed by the analog filter	50(2)	260(3)	ns

1. Guaranteed by design.
2. Spikes with widths below $t_{AF(min)}$ are filtered.
3. Spikes with widths above $t_{AF(max)}$ are not filtered

SPI/I^{2}S characteristics

Unless otherwise specified, the parameters given in *Table 61* for SPI or in *Table 62* for I^{2}S are derived from tests performed under ambient temperature, f_{PCLKx} frequency and V_{DD} supply voltage conditions summarized in *Table 23*.

Refer to *Section 6.3.14: I/O port characteristics* for more details on the input/output alternate function characteristics (NSS, SCK, MOSI, MISO for SPI and WS, CK, SD for I^{2}S).

Table 61. SPI characteristics(1)

Symbol	Parameter	Conditions	Min	Typ	Max	Unit
f_{SCK} $1/t_{c(SCK)}$	SPI clock frequency	Master mode	-	-	18	MHz
		Slave mode	-	-	18	
$t_{su(NSS)}$	NSS setup time	Slave mode, SPI presc = 2	4*Tpclk	-	-	ns
$t_{h(NSS)}$	NSS hold time	Slave mode, SPI presc = 2	2*Tpclk	-	-	
$t_{w(SCKH)}$ $t_{w(SCKL)}$	SCK high and low time	Master mode, f_{PCLK} = 36 MHz, presc = 4	Tpclk-2	Tpclk	Tpclk+2	
$t_{su(MI)}$ $t_{su(SI)}$	Data input setup time	Master mode	0	-	-	
		Slave mode	1	-	-	
$t_{h(MI)}$	Data input hold time	Master mode	6.5	-	-	
$t_{h(SI)}$		Slave mode	2.5	-	-	
$t_{a(SO)}$	Data output access time	Slave mode	8	-	40	
$t_{dis(SO)}$	Data output disable time	Slave mode	8	-	14	
$t_{v(SO)}$	Data output valid time	Slave mode	-	12	27	
$t_{v(MO)}$		Master mode	-	1.5	4	
$t_{h(SO)}$	Data output hold time	Slave mode	7.5	-	-	
$t_{h(MO)}$		Master mode	0	-	-	

1. Guaranteed by characterization results.

Figure 25. SPI timing diagram - slave mode and CPHA = 0

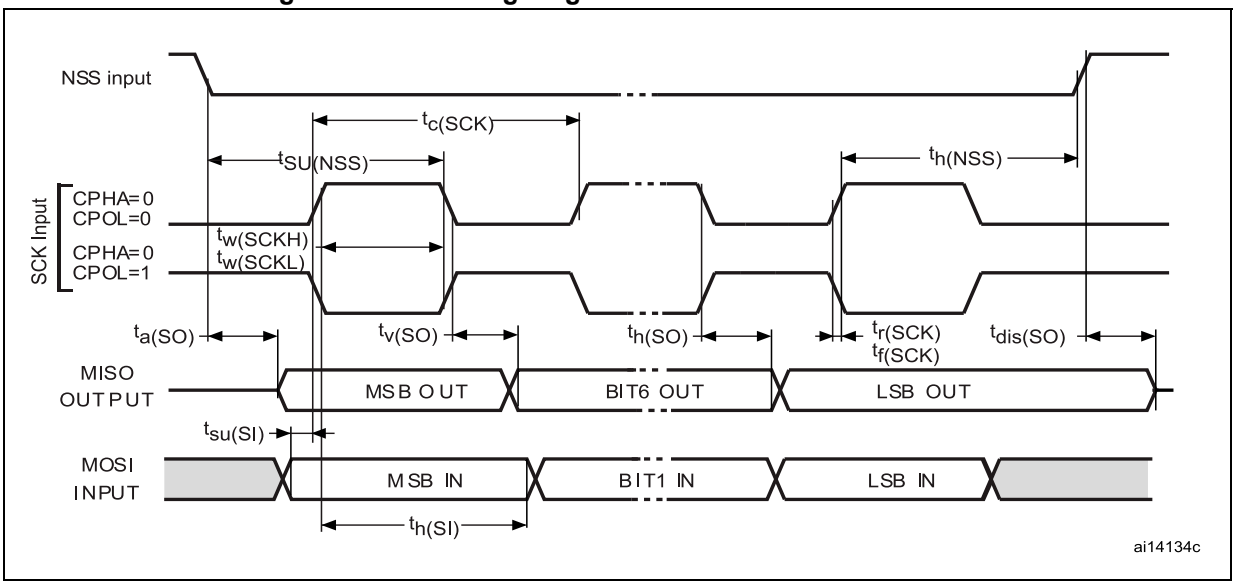

Figure 26. SPI timing diagram - slave mode and CPHA = 1[(1)]

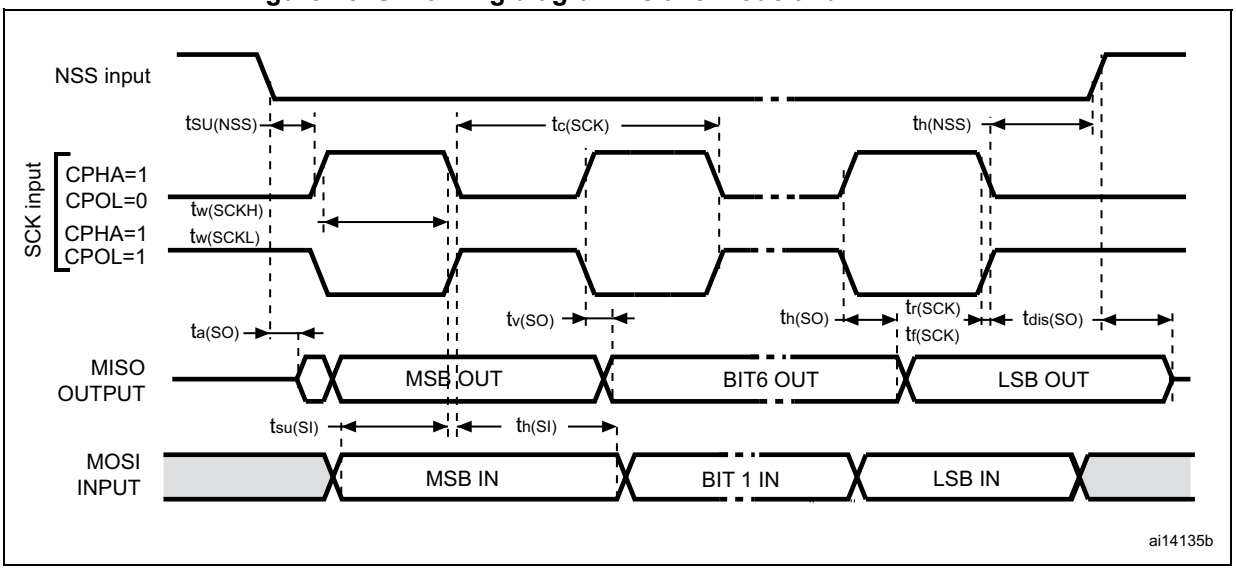

1. Measurement points are done at $0.5V_{DD}$ and with external C_L = 30 pF.

Figure 27. SPI timing diagram - master mode(1)

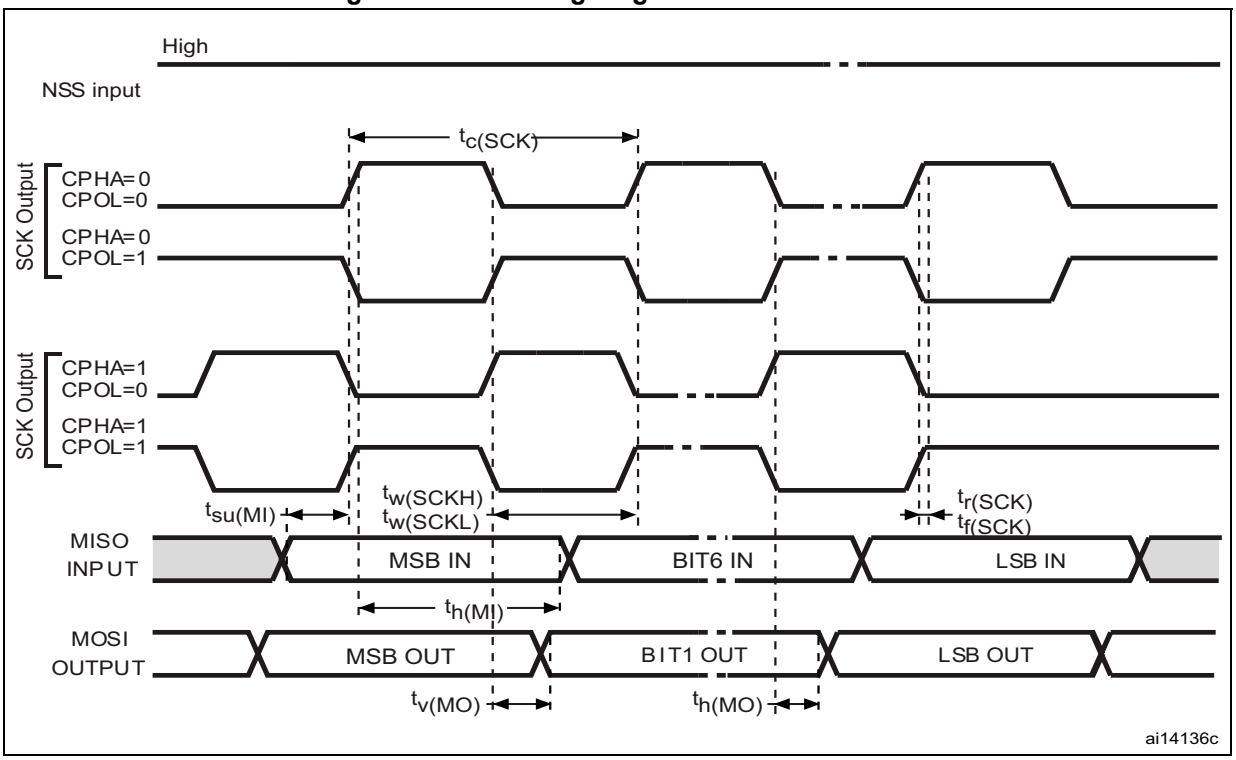

1. Measurement points are done at $0.5V_{DD}$ and with external C_L = 30 pF.

Table 62. I2S characteristics(1)

Symbol	Parameter	Conditions	Min	Max	Unit
f_{MCK}	I2S Main clock output	-	256 x 8K	256xFs (2)	MHz
f_{CK}	I2S clock frequency	Master data: 32 bits	-	64xFs	MHz
		Slave data: 32 bits	-	64xFs	
D_{CK}	I2S clock frequency duty cycle	Slave receiver	30	70	%

Table 62. I2S characteristics(1) (continued)

Symbol	Parameter	Conditions	Min	Max	Unit
$t_{v(WS)}$	WS valid time	Master mode	-	20	ns
$t_{h(WS)}$	WS hold time	Master mode	2	-	
$t_{su(WS)}$	WS setup time	Slave mode	0	-	
$t_{h(WS)}$	WS hold time	Slave mode	4	-	
$t_{su(SD_MR)}$	Data input setup time	Master receiver	1	-	
$t_{su(SD_SR)}$		Slave receiver	1	-	
$t_{h(SD_MR)}$	Data input hold time	Master receiver	8	-	
$t_{h(SD_SR)}$		Slave receiver	2.5	-	
$t_{v(SD_ST)}$	Data output valid time	Slave transmitter (after enable edge)	-	50	
$t_{v(SD_MT)}$		Master transmitter (after enable edge)	-	22	
$t_{h(SD_ST)}$	Data output hold time	Slave transmitter (after enable edge)	8	-	
$t_{h(SD_MT)}$		Master transmitter (after enable edge)	1	-	

1. Guaranteed by characterization results.
2. 256xFs maximum is 36 MHz (APB1 maximum frequency).

*Note: Refer to RM0365 Reference Manual I2S Section for more details about the sampling frequency (Fs), fMCK, fCK, DCK values reflect only the digital peripheral behavior, source clock precision might slightly change the values DCK depends mainly on ODD bit value. Digital contribution leads to a min of (I2SDIV/(2*I2SDIV+ODD) and a max (I2SDIV+ODD)/(2*I2SDIV+ODD) and Fs max supported for each mode/condition.*

Figure 28. I²S slave timing diagram (Philips protocol)(1)

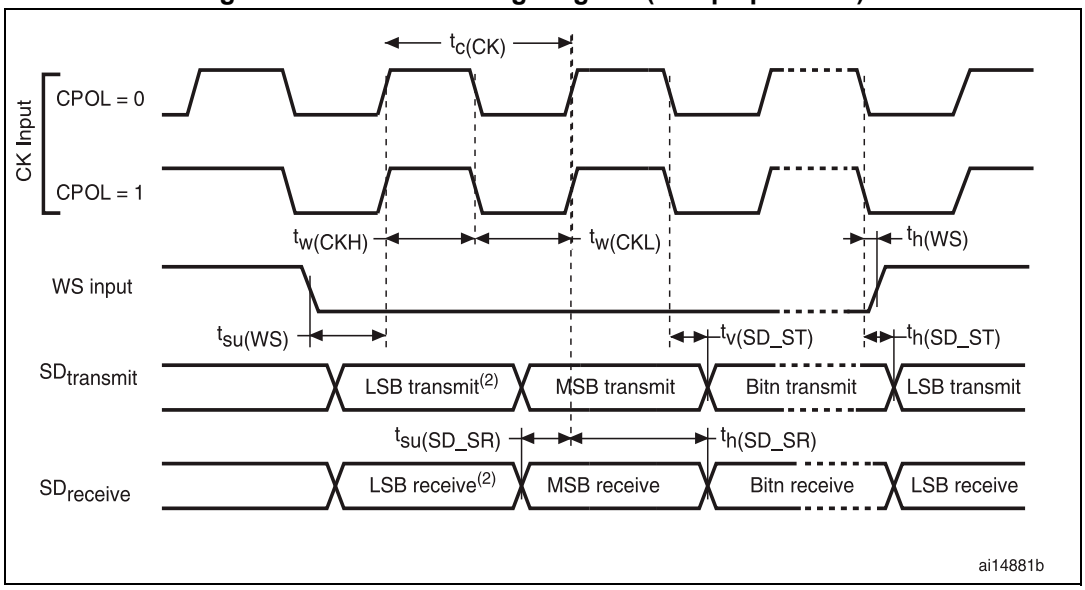

1. Measurement points are done at $0.5V_{DD}$ and with external C_L=30 pF.
2. LSB transmit/receive of the previously transmitted byte. No LSB transmit/receive is sent before the first byte.

Figure 29. I²S master timing diagram (Philips protocol)(1)

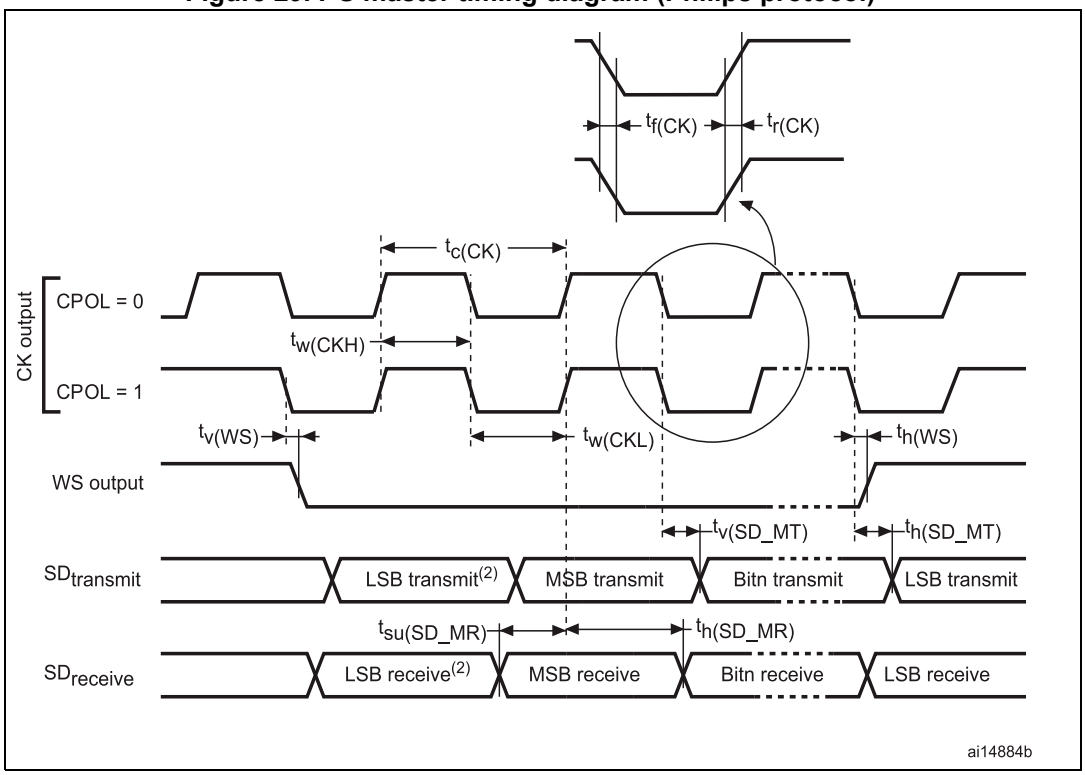

1. Measurement points are done at $0.5V_{DD}$ and with external C_L=30 pF.
2. LSB transmit/receive of the previously transmitted byte. No LSB transmit/receive is sent before the first byte.

USB characteristics

Table 63. USB startup time

Symbol	Parameter	Max	Unit
$t_{STARTUP}$(1)	USB transceiver startup time	1	µs

1. Guaranteed by design.

Table 64. USB DC electrical characteristics

Symbol	Parameter	Conditions	Min.(1)	Max.(1)	Unit
Input levels					
V_{DD}	USB operating voltage(2)		3.0(3)	3.6	V
V_{DI}(4)	Differential input sensitivity	I(USB_DP, USB_DM)	0.2	-	V
V_{CM}(4)	Differential common mode range	Includes V_{DI} range	0.8	2.5	
V_{SE}(4)	Single ended receiver threshold		1.3	2.0	
Output levels					
V_{OL}	Static output level low	R_L of 1.5 kΩ to 3.6 V(5)	-	0.3	V
V_{OH}	Static output level high	R_L of 15 kΩ to V_{SS}(5)	2.8	3.6	

1. All the voltages are measured from the local ground potential.
2. To be compliant with the USB 2.0 full-speed electrical specification, the USB_DP (D+) pin should be pulled up with a 1.5 kΩ resistor to a 3.0-to-3.6 V voltage range.
3. The STM32F3xxx USB functionality is ensured down to 2.7 V but not the full USB electrical characteristics which are degraded in the 2.7-to-3.0 V V_{DD} voltage range.
4. Guaranteed by design.
5. R_L is the load connected on the USB drivers.

Figure 30. USB timings: definition of data signal rise and fall time

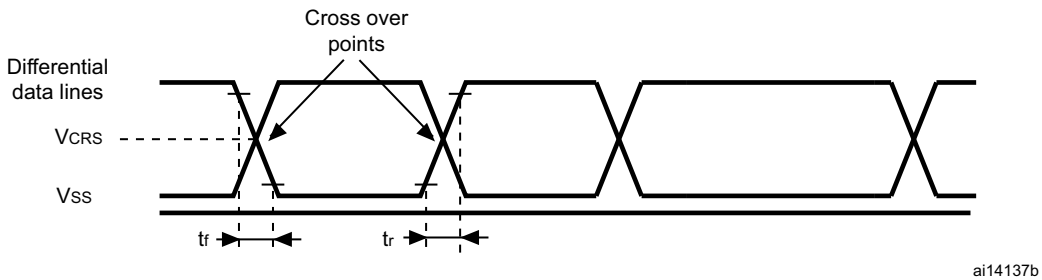

Table 65. USB: Full-speed electrical characteristics(1)

Symbol	Parameter	Conditions	Min	Typ	Max	Unit
Driver characteristics						
t_r	Rise time(2)	C_L = 50 pF	4	-	20	ns
t_f	Fall time(2)	C_L = 50 pF	4	-	20	ns
t_{rfm}	Rise/ fall time matching	t_r/t_f	90	-	110	%

Table 65. USB: Full-speed electrical characteristics(1) (continued)

Symbol	Parameter	Conditions	Min	Typ	Max	Unit
V_{CRS}	Output signal crossover voltage		1.3	-	2.0	V
Output driver Impedance(3)	Z_{DRV}	driving high and low	28	40	44	Ω

1. Guaranteed by design.
2. Measured from 10% to 90% of the data signal. For more detailed informations, please refer to USB Specification - Chapter 7 (version 2.0).
3. No external termination series resistors are required on USB_DP (D+) and USB_DM (D-), the matching impedance is already included in the embedded driver.

CAN (controller area network) interface

Refer to *Section 6.3.14: I/O port characteristics* for more details on the input/output alternate function characteristics (CAN_TX and CAN_RX).

6.3.18 ADC characteristics

Unless otherwise specified, the parameters given in *Table 66* to *Table 68* are guaranteed by design, with conditions summarized in *Table 23*.

Table 66. ADC characteristics

Symbol	Parameter	Conditions	Min	Typ	Max	Unit
V_{DDA}	Analog supply voltage for ADC	-	2	-	3.6	V
I_{DDA}	ADC current consumption (see *Figure 31*)	Single-ended mode, 5 MSPS	-	1011.3	1172.0	µA
		Single-ended mode, 1 MSPS	-	214.7	322.3	
		Single-ended mode, 200 KSPS	-	54.7	81.1	
		Differential mode, 5 MSPS	-	1061.5	1243.6	
		Differential mode, 1 MSPS	-	246.6	337.6	
		Differential mode, 200 KSPS	-	56.4	83.0	
f_{ADC}	ADC clock frequency	-	0.14	-	72	MHz
f_S(1)	Sampling rate	Resolution = 12 bits, Fast Channel	0.01	-	5.14	MSPS
		Resolution = 10 bits, Fast Channel	0.012	-	6	
		Resolution = 8 bits, Fast Channel	0.014	-	7.2	
		Resolution = 6 bits, Fast Channel	0.0175	-	9	
f_{TRIG}(1)	External trigger frequency	f_{ADC} = 72 MHz Resolution = 12 bits	-	-	5.14	MHz
		Resolution = 12 bits	-	-	14	$1/f_{ADC}$
V_{AIN}	Conversion voltage range	-	0	-	V_{DDA}	V
R_{AIN}(1)	External input impedance	-	-	-	100	kΩ

Table 66. ADC characteristics (continued)

Symbol	Parameter	Conditions	Min	Typ	Max	Unit
C_{ADC}(1)	Internal sample and hold capacitor	-	-	5	-	pF
t_{CAL}(1)	Calibration time	f_{ADC} = 72 MHz	1.56			µs
		-	112			$1/f_{ADC}$
t_{latr}(1)	Trigger conversion latency Regular and injected channels without conversion abort	CKMODE = 00	1.5	2	2.5	$1/f_{ADC}$
		CKMODE = 01	-	-	2	$1/f_{ADC}$
		CKMODE = 10	-	-	2.25	$1/f_{ADC}$
		CKMODE = 11	-	-	2.125	$1/f_{ADC}$
$t_{latrinj}$(1)	Trigger conversion latency Injected channels aborting a regular conversion	CKMODE = 00	2.5	3	3.5	$1/f_{ADC}$
		CKMODE = 01	-	-	3	$1/f_{ADC}$
		CKMODE = 10	-	-	3.25	$1/f_{ADC}$
		CKMODE = 11	-	-	3.125	$1/f_{ADC}$
t_S(1)	Sampling time	f_{ADC} = 72 MHz	0.021	-	8.35	µs
		-	1.5	-	601.5	$1/f_{ADC}$
TADCVREG_STUP(1)	ADC Voltage Regulator Start-up time	-	-	-	10	µs
t_{STAB}(1)	Power-up time	-	1			conversion cycle
t_{CONV}(1)	Total conversion time (including sampling time)	f_{ADC} = 72 MHz Resolution = 12 bits	0.19	-	8.52	µs
		Resolution = 12 bits	14 to 614 (t_S for sampling + 12.5 for successive approximation)			$1/f_{ADC}$
CMIR(1)	Common mode input signal	ADC differential mode	$(V_{SSA} + V_{REF+})/2$ - 0.18	$(V_{SSA} + V_{REF+})/2$	$(V_{SSA} + V_{REF+})/2$ + 0.18	V

1. Data guaranteed by design.

Figure 31 illustrates the ADC current consumption as per the clock frequency in single-ended and differential modes.

Figure 31. ADC typical current consumption in single-ended and differential modes

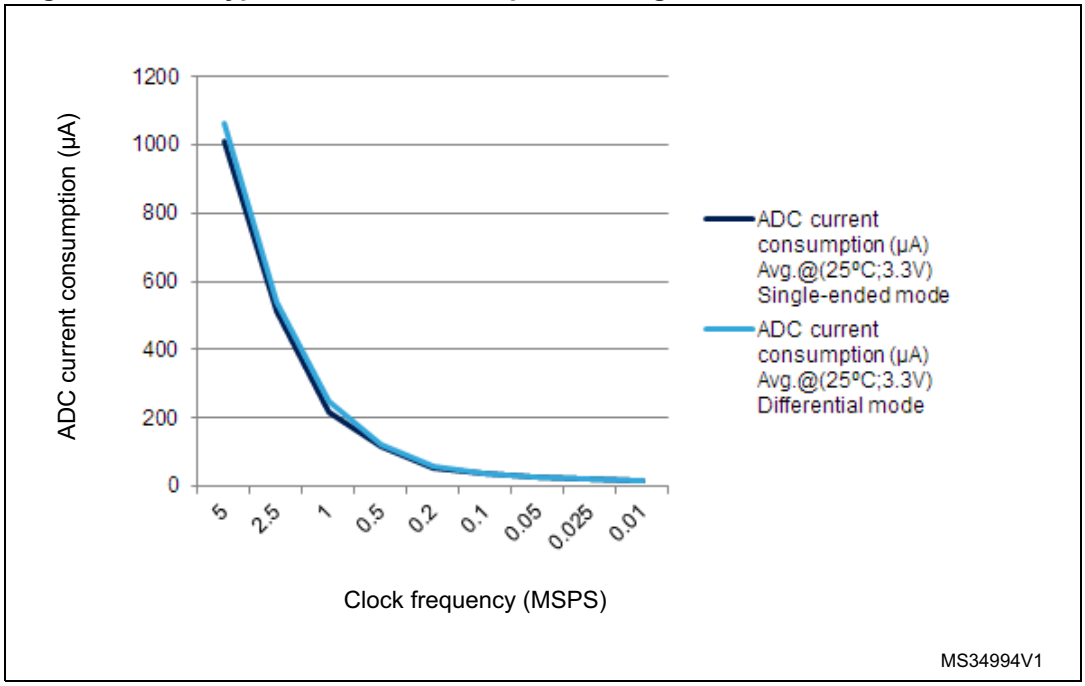

Table 67. Maximum ADC R_{AIN} (1)

Resolution	Sampling cycle @ 72 MHz	Sampling time [ns] @ 72 MHz	R_{AIN} max (kΩ)		
			Fast channels(2)	Slow channels	Other channels(3)
12 bits	1.5	20.83	0.018	NA	NA
	2.5	34.72	0.150	NA	0.022
	4.5	62.50	0.470	0.220	0.180
	7.5	104.17	0.820	0.560	0.470
	19.5	270.83	2.70	1.80	1.50
	61.5	854.17	8.20	6.80	4.70
	181.5	2520.83	22.0	18.0	15.0
	601.5	8354.17	82.0	68.0	47.0

Table 67. Maximum ADC R_{AIN} (1) (continued)

Resolution	Sampling cycle @ 72 MHz	Sampling time [ns] @ 72 MHz	R_{AIN} max (kΩ)		
			Fast channels(2)	Slow channels	Other channels(3)
10 bits	1.5	20.83	0.082	NA	NA
	2.5	34.72	0.270	0.082	0.100
	4.5	62.50	0.560	0.390	0.330
	7.5	104.17	1.20	0.82	0.68
	19.5	270.83	3.30	2.70	2.20
	61.5	854.17	10.0	8.2	6.8
	181.5	2520.83	33.0	27.0	22.0
	601.5	8354.17	100.0	82.0	68.0
8 bits	1.5	20.83	0.150	NA	0.039
	2.5	34.72	0.390	0.180	0.180
	4.5	62.50	0.820	0.560	0.470
	7.5	104.17	1.50	1.20	1.00
	19.5	270.83	3.90	3.30	2.70
	61.5	854.17	12.00	12.00	8.20
	181.5	2520.83	39.00	33.00	27.00
	601.5	8354.17	100.00	100.00	82.00
6 bits	1.5	20.83	0.270	0.100	0.150
	2.5	34.72	0.560	0.390	0.330
	4.5	62.50	1.200	0.820	0.820
	7.5	104.17	2.20	1.80	1.50
	19.5	270.83	5.60	4.70	3.90
	61.5	854.17	18.0	15.0	12.0
	181.5	2520.83	56.0	47.0	39.0
	601.5	8354.17	100.00	100.0	100.0

1. Guaranteed by characterization results.
2. All fast channels, expect channel on PA6.
3. Channel available on PA6.

Table 68. ADC accuracy - limited test conditions(1)(2)

Symbol	Parameter	Conditions			Min (3)	Typ	Max (3)	Unit
ET	Total unadjusted error	ADC clock freq. ≤ 72 MHz Sampling freq. ≤ 5 Msps V_{DDA} = 3.3 V 25°C	Single ended	Fast channel 5.1 Ms	-	±4	±4.5	LSB
				Slow channel 4.8 Ms	-	±5.5	±6	
			Differential	Fast channel 5.1 Ms	-	±3.5	±4	
				Slow channel 4.8 Ms	-	±3.5	±4	
EO	Offset error		Single ended	Fast channel 5.1 Ms	-	±2	±2	
				Slow channel 4.8 Ms	-	±1.5	±2	
			Differential	Fast channel 5.1 Ms	-	±1.5	±2	
				Slow channel 4.8 Ms	-	±1.5	±2	
EG	Gain error		Single ended	Fast channel 5.1 Ms	-	±3	±4	
				Slow channel 4.8 Ms	-	±5	±5.5	
			Differential	Fast channel 5.1 Ms	-	±3	±3	
				Slow channel 4.8 Ms	-	±3	±3.5	
ED	Differential linearity error		Single ended	Fast channel 5.1 Ms	-	±1	±1	
				Slow channel 4.8 Ms	-	±1	±1	
			Differential	Fast channel 5.1 Ms	-	±1	±1	
				Slow channel 4.8 Ms	-	±1	±1	
EL	Integral linearity error		Single ended	Fast channel 5.1 Ms	-	±1.5	±2	
				Slow channel 4.8 Ms	-	±2	±3	
			Differential	Fast channel 5.1 Ms	-	±1.5	±1.5	
				Slow channel 4.8 Ms	-	±1.5	±2	
ENOB (4)	Effective number of bits		Single ended	Fast channel 5.1 Ms	10.8	10.8	-	bit
				Slow channel 4.8 Ms	10.8	10.8	-	
			Differential	Fast channel 5.1 Ms	11.2	11.3	-	
				Slow channel 4.8 Ms	11.2	11.3	-	
SINAD (4)	Signal-to-noise and distortion ratio		Single ended	Fast channel 5.1 Ms	66	67	-	dB
				Slow channel 4.8 Ms	66	67	-	
			Differential	Fast channel 5.1 Ms	69	70	-	
				Slow channel 4.8 Ms	69	70	-	

Table 68. ADC accuracy - limited test conditions(1)(2) (continued)

Symbol	Parameter	Conditions			Min (3)	Typ	Max (3)	Unit
SNR(4)	Signal-to-noise ratio	ADC clock freq. ≤ 72 MHz Sampling freq ≤ 5 Msps V_{DDA} = 3.3 V 25°C	Single ended	Fast channel 5.1 Ms	66	67	-	dB
				Slow channel 4.8 Ms	66	67	-	
			Differential	Fast channel 5.1 Ms	69	70	-	
				Slow channel 4.8 Ms	69	70	-	
THD(4)	Total harmonic distortion		Single ended	Fast channel 5.1 Ms	-	-80	-80	
				Slow channel 4.8 Ms	-	-78	-77	
			Differential	Fast channel 5.1 Ms	-	-83	-82	
				Slow channel 4.8 Ms	-	-81	-80	

1. ADC DC accuracy values are measured after internal calibration.
2. ADC accuracy vs. negative Injection Current: Injecting negative current on any analog input pins should be avoided as this significantly reduces the accuracy of the conversion being performed on another analog input. It is recommended to add a Schottky diode (pin to ground) to analog pins which may potentially inject negative current.
Any positive injection current within the limits specified for $I_{INJ(PIN)}$ and $\Sigma I_{INJ(PIN)}$ in *Section 6.3.14* does not affect the ADC accuracy.
3. Guaranteed by characterization results.
4. Value measured with a –0.5dB Full Scale 50kHz sine wave input signal.

Table 69. ADC accuracy (1)(2)(3)

Symbol	Parameter	Conditions			Min(4)	Max (4)	Unit
ET	Total unadjusted error	ADC clock freq. ≤ 72 MHz, Sampling freq. ≤ 5 Msps 2.0 V ≤ V_{DDA} ≤ 3.6 V	Single ended	Fast channel 5.1 Ms	-	±6.5	LSB
				Slow channel 4.8 Ms	-	±6.5	
			Differential	Fast channel 5.1 Ms	-	±4	
				Slow channel 4.8 Ms	-	±4.5	
EO	Offset error		Single ended	Fast channel 5.1 Ms	-	±3	
				Slow channel 4.8 Ms	-	±3	
			Differential	Fast channel 5.1 Ms	-	±2.5	
				Slow channel 4.8 Ms	-	±2.5	
EG	Gain error		Single ended	Fast channel 5.1 Ms	-	±6	
				Slow channel 4.8 Ms	-	±6	
			Differential	Fast channel 5.1 Ms	-	±3.5	
				Slow channel 4.8 Ms	-	±4	
ED	Differential linearity error		Single ended	Fast channel 5.1 Ms	-	±1.5	
				Slow channel 4.8 Ms	-	±1.5	
			Differential	Fast channel 5.1 Ms	-	±1.5	
				Slow channel 4.8 Ms	-	±1.5	
EL	Integral linearity error		Single ended	Fast channel 5.1 Ms	-	±3	
				Slow channel 4.8 Ms	-	±3.5	
			Differential	Fast channel 5.1 Ms	-	±2	
				Slow channel 4.8 Ms	-	±2.5	
ENOB (5)	Effective number of bits		Single ended	Fast channel 5.1 Ms	10.4	-	bits
				Slow channel 4.8 Ms	10.4	-	
			Differential	Fast channel 5.1 Ms	10.8	-	
				Slow channel 4.8 Ms	10.8	-	
SINAD (5)	Signal-to-noise and distortion ratio		Single ended	Fast channel 5.1 Ms	64	-	dB
				Slow channel 4.8 Ms	63	-	
			Differential	Fast channel 5.1 Ms	67	-	
				Slow channel 4.8 Ms	67	-	

Table 69. ADC accuracy (1)(2)(3) (continued)

Symbol	Parameter	Conditions			Min(4)	Max (4)	Unit
SNR(5)	Signal-to-noise ratio	ADC clock freq. ≤ 72 MHz, Sampling freq ≤ 5 Msps, 2 V ≤ V_{DDA} ≤ 3.6 V	Single ended	Fast channel 5.1 Ms	64	-	dB
				Slow channel 4.8 Ms	64	-	
			Differential	Fast channel 5.1 Ms	67	-	
				Slow channel 4.8 Ms	67	-	
THD(5)	Total harmonic distortion		Single ended	Fast channel 5.1 Ms	-	-75	
				Slow channel 4.8 Ms	-	-75	
			Differential	Fast channel 5.1 Ms	-	-79	
				Slow channel 4.8 Ms	-	-78	

1. ADC DC accuracy values are measured after internal calibration.
2. ADC accuracy vs. negative Injection Current: Injecting negative current on any analog input pins should be avoided as this significantly reduces the accuracy of the conversion being performed on another analog input. It is recommended to add a Schottky diode (pin to ground) to analog pins which may potentially inject negative current.
Any positive injection current within the limits specified for $I_{INJ(PIN)}$ and $\Sigma I_{INJ(PIN)}$ in *Section 6.3.14* does not affect the ADC accuracy.
3. Better performance may be achieved in restricted V_{DDA}, frequency and temperature ranges.
4. Guaranteed by characterization results.
5. Value measured with a –0.5dB Full Scale 50kHz sine wave input signal.

Table 70. ADC accuracy(1)(2)

Symbol	Parameter	Test conditions		Typ	Max(3)	Unit
ET	Total unadjusted error	ADC Freq ≤ 72 MHz Sampling Freq ≤ 1MSPS 2.4 V ≤ V_{DDA} = V_{REF+} ≤ 3.6 V Single-ended mode	Fast channel	±2.5	±5	LSB
			Slow channel	±3.5	±5	
EO	Offset error		Fast channel	±1	±2.5	
			Slow channel	±1.5	±2.5	
EG	Gain error		Fast channel	±2	±3	
			Slow channel	±3	±4	
ED	Differential linearity error		Fast channel	±0.7	±2	
			Slow channel	±0.7	±2	
EL	Integral linearity error		Fast channel	±1	±3	
			Slow channel	±1.2	±3	

1. ADC DC accuracy values are measured after internal calibration.
2. ADC accuracy vs. negative Injection Current: Injecting negative current on any analog input pins should be avoided as this significantly reduces the accuracy of the conversion being performed on another analog input. It is recommended to add a Schottky diode (pin to ground) to analog pins which may potentially inject negative current. Any positive injection current within the limits specified for IINJ(PIN) and ∑IINJ(PIN) in *Section 6.3.14: I/O port characteristics* does not affect the ADC accuracy.
3. Guaranteed by characterization results.

Figure 32. ADC accuracy characteristics

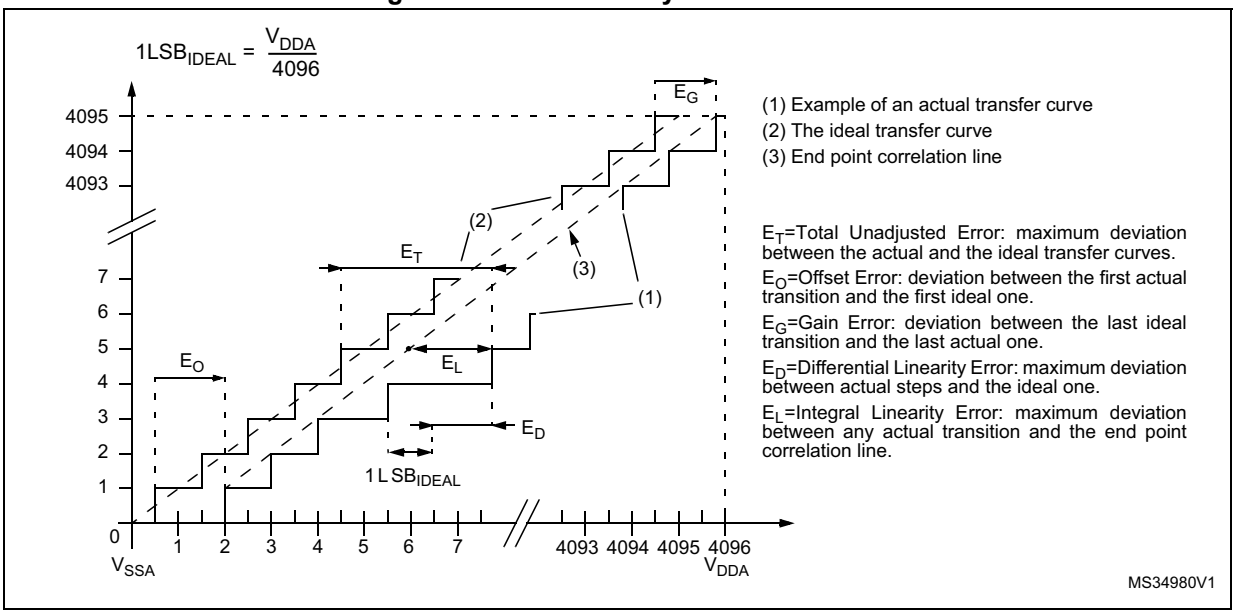

Figure 33. Typical connection diagram using the ADC

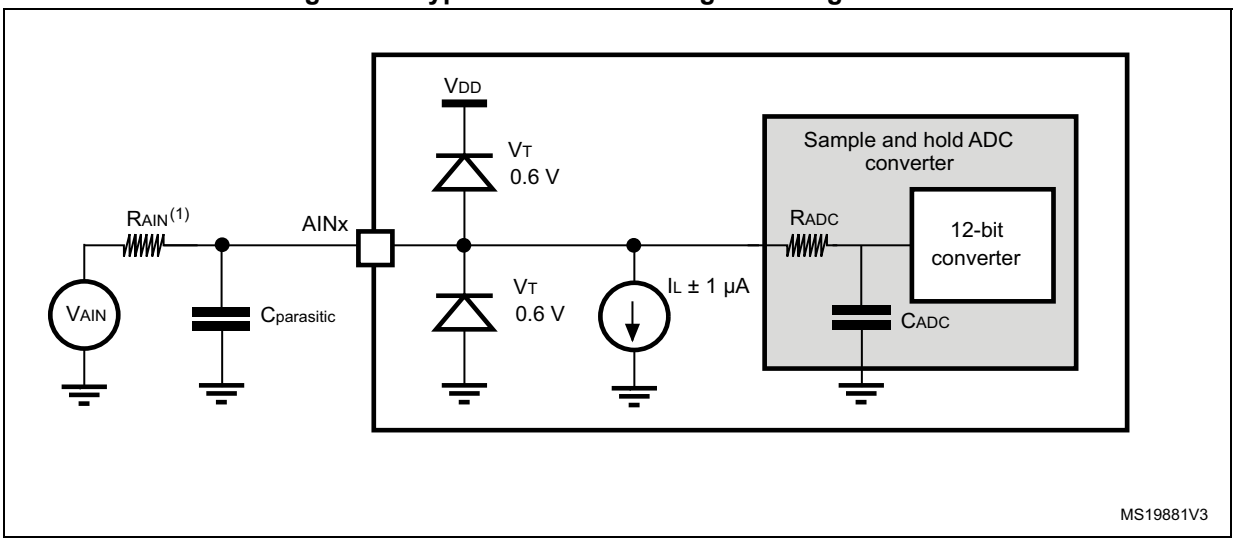

1. Refer to *Table 66* for the values of R_{AIN}.
2. $C_{parasitic}$ represents the capacitance of the PCB (dependent on soldering and PCB layout quality) plus the pad capacitance (roughly 7 pF). A high $C_{parasitic}$ value downgrades conversion accuracy. To remedy this, f_{ADC} should be reduced.

General PCB design guidelines

Power supply decoupling should be performed as shown in *Figure 11*. The 10 nF capacitor should be ceramic (good quality) and it should be placed as close as possible to the chip.

6.3.19 DAC electrical specifications

Table 71. DAC characteristics

Symbol	Parameter	Conditions		Min	Typ	Max	Unit
V_{DDA}	Analog supply voltage	DAC output buffer ON		2.4	-	3.6	V
R_{LOAD}(1)	Resistive load	DAC output buffer ON	Connected to V_{SSA}	5	-	-	kΩ
			Connected to V_{DDA}	25	-	-	
R_O(1)	Output impedance	DAC output buffer ON		-	-	15	kΩ
C_{LOAD}(1)	Capacitive load	DAC output buffer ON		-	-	50	pF
V_{DAC_OUT}(1)	Voltage on DAC_OUT output	Corresponds to 12-bit input code (0x0E0) to (0xF1C) at V_{DDA} = 3.6 V and (0x155) and (0xEAB) at V_{DDA} = 2.4 V DAC output buffer ON.		0.2	-	V_{DDA} – 0.2	V
		DAC output buffer OFF		-	0.5	V_{DDA} - 1LSB	mV
I_{DDA}(3)	DAC DC current consumption in quiescent mode (Standby mode)(2)	With no load, middle code (0x800) on the input.		-	-	380	µA
		With no load, worst code (0xF1C) on the input.		-	-	480	µA
DNL(3)	Differential non linearity Difference between two consecutive code-1LSB)	Given for a 10-bit input code		-	-	±0.5	LSB
		Given for a 12-bit input code		-	-	±2	LSB
INL(3)	Integral non linearity (difference between measured value at Code i and the value at Code i on a line drawn between Code 0 and last Code 4095)	Given for a 10-bit input code		-	-	±1	LSB
		Given for a 12-bit input code		-	-	±4	LSB
Offset(3)	Offset error (difference between measured value at Code (0x800) and the ideal value = $V_{DDA}/2$)	-		-	-	±10	mV
		Given for a 10-bit input code at V_{DDA} = 3.6 V		-	-	±3	LSB
		Given for a 12-bit input code at V_{DDA} = 3.6 V		-	-	±12	LSB
Gain error(3)	Gain error	Given for a 12-bit input code		-	-	±0.5	%
$t_{SETTLING}$(3)	Settling time (full scale: for a 12-bit input code transition between the lowest and the highest input codes when DAC_OUT reaches	$C_{LOAD} \leq 50$ pF, $R_{LOAD} \geq 5$ kΩ		-	3	4	µs

Table 71. DAC characteristics (continued)

Symbol	Parameter	Conditions	Min	Typ	Max	Unit
Update rate(3)	Max frequency for a correct DAC_OUT change when small variation in the input code (from code i to i+1LSB)	$C_{LOAD} \leq 50$ pF, $R_{LOAD} \geq 5$ kΩ	-	-	1	MS/s
t_{WAKEUP}(3)	Wakeup time from off state (Setting the ENx bit in the DAC Control register)	$C_{LOAD} \leq 50$ pF, $R_{LOAD} \geq 5$ kΩ	-	6.5	10	µs
PSRR+ (1)	Power supply rejection ratio (to V_{DDA}) (static DC measurement	$C_{LOAD} = 50$ pF, No $R_{LOAD} \geq 5$ kΩ,	-	–67	–40	dB

1. Guaranteed by design.
2. Quiescent mode refers to the state of the DAC a keeping steady value on the output, so no dynamic consumption is involved.
3. Guaranteed by characterization results.

Figure 34. 12-bit buffered /non-buffered DAC

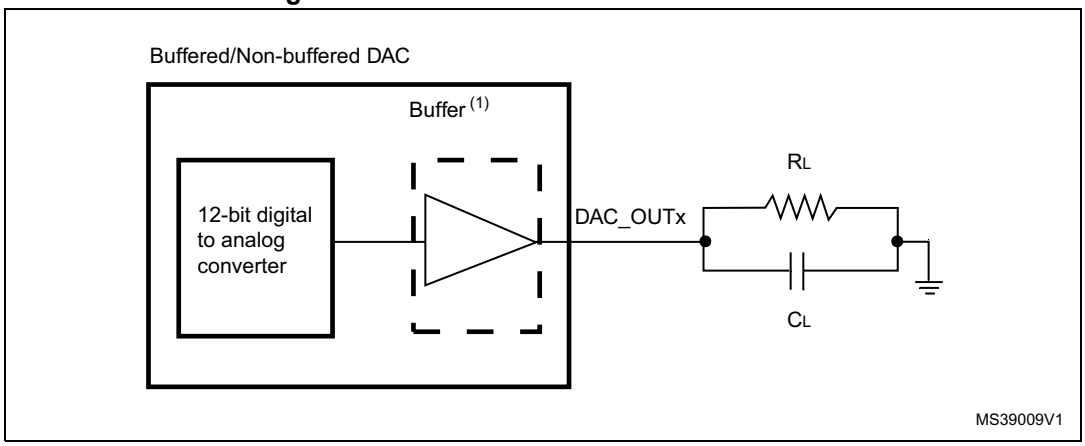

1. The DAC integrates an output buffer that can be used to reduce the output impedance and to drive external loads directly without the use of an external operational amplifier. The buffer can be bypassed by configuring the BOFFx bit in the DAC_CR register.

6.3.20 Comparator characteristics

Table 72. Comparator characteristics(1)(2)

Symbol	Parameter	Conditions	Min.	Typ.	Max.	Unit
V_{DDA}	Analog supply voltage	-	2	-	3.6	V
V_{IN}	Comparator input voltage range	-	0	-	V_{DDA}	V
V_{BG}	Scaler input voltage	-	-	$V_{REFINIT}$	-	
V_{SC}	Scaler offset voltage	-	-	±5	±10	mV

Table 72. Comparator characteristics(1)(2) (continued)

Symbol	Parameter	Conditions	Min.	Typ.	Max.	Unit
t_{S_SC}	V_{REFINT} scaler startup time from power down	V_{REFINT} scaler activation after device power on	-	-	1(3)	s
		Next activations	-	-	0.2	ms
t_{START}	Comparator startup time	$V_{DDA} \geq 2.7$ V	-	-	4	µs
		$V_{DDA} < 2.7$ V	-	-	10	
t_D	Propagation delay for 200 mV step with 100 mV overdrive	$V_{DDA} \geq 2.7$ V	-	25	28	ns
		$V_{DDA} < 2.7$ V	-	28	30	
	Propagation delay for full range step with 100 mV overdrive	$V_{DDA} \geq 2.7$ V	-	32	35	
		$V_{DDA} < 2.7$ V	-	35	40	
V_{OFFSET}	Comparator offset error	$V_{DDA} \geq 2.7$ V	-	±5	±10	mV
		$V_{DDA} < 2.7$ V	-	-	±25	
TV_{OFFSET}	Total offset variation	Full temperature range	-	-	3	mV
$I_{DD(COMP)}$	COMP current consumption	-	-	400	600	µA

1. Guaranteed by design.
2. The comparators do not have built-in hysteresis.
3. For more details and conditions, see *Figure 35: Maximum V_{REFINT} scaler startup time from power down*.

Figure 35. Maximum V_{REFINT} scaler startup time from power down

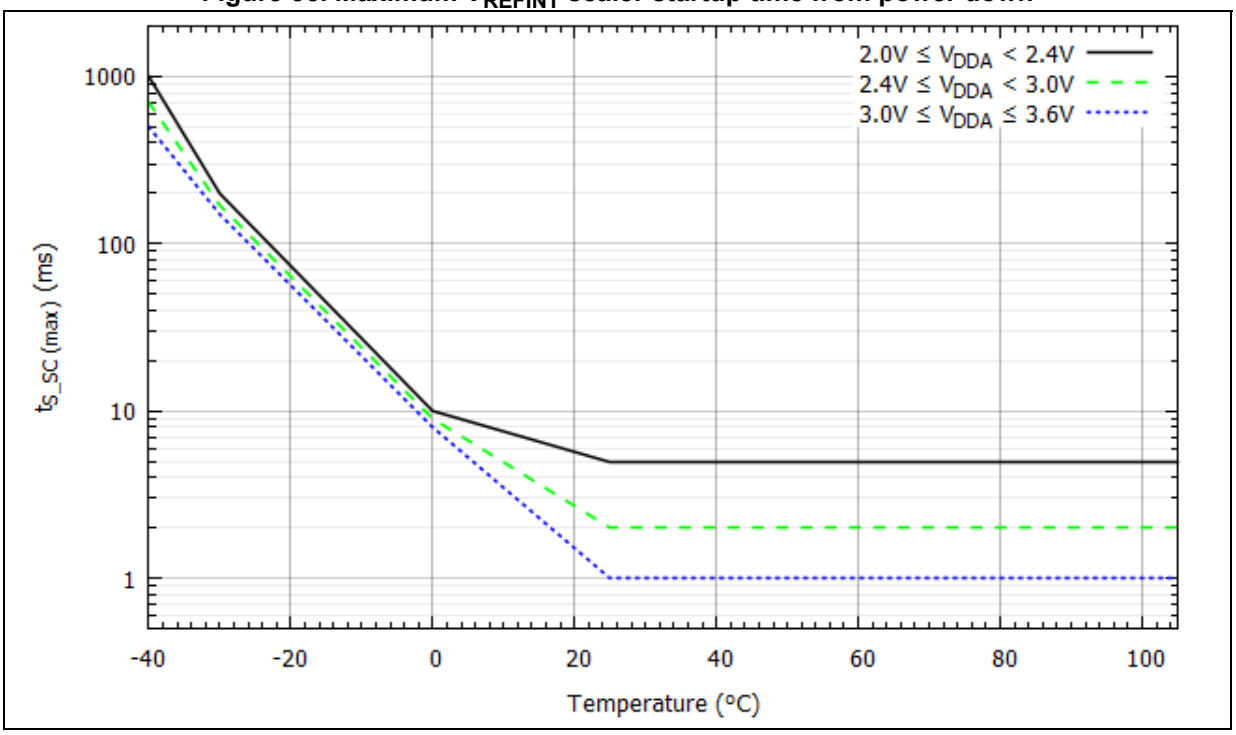

6.3.21 Operational amplifier characteristics

Table 73. Operational amplifier characteristics(1)

Symbol	Parameter		Condition	Min	Typ	Max	Unit
V_{DDA}	Analog supply voltage		-	2.4	-	3.6	V
CMIR	Common mode input range		-	0	-	V_{DDA}	V
VI_{OFFSET}	Input offset voltage	Maximum calibration range	25°C, No Load on output.	-	-	4	mV
			All voltage/Temp.	-	-	6	
		After offset calibration	25°C, No Load on output.	-	-	1.6	
			All voltage/Temp.	-	-	3	
ΔVI_{OFFSET}	Input offset voltage drift		-	-	5	-	µV/°C
I_{LOAD}	Drive current		-	-	-	500	µA
IDDOPAMP	Consumption		No load, quiescent mode	-	690	1450	µA
CMRR	Common mode rejection ratio		-	-	90	-	dB
PSRR	Power supply rejection ratio		DC	73	117	-	dB
GBW	Bandwidth		-	-	8.2	-	MHz
SR	Slew rate		-	-	4.7	-	V/µs
R_{LOAD}	Resistive load		-	4	-	-	kΩ
C_{LOAD}	Capacitive load		-	-	-	50	pF
VOH_{SAT}	High saturation voltage(2)		R_{load} = min, Input at V_{DDA}.	V_{DDA}-100	-	-	mV
			R_{load} = 20K, Input at V_{DDA}.	V_{DDA}-20	-	-	
VOL_{SAT}	Low saturation voltage(2)		Rload = min, input at 0V	-	-	100	
			Rload = 20K, input at 0V.	-	-	20	
φm	Phase margin		-	-	62	-	°
$t_{OFFTRIM}$	Offset trim time: during calibration, minimum time needed between two steps to have 1 mV accuracy		-	-	-	2	ms
t_{WAKEUP}	Wake up time from OFF state.		$C_{LOAD} \leq 50$ pf, $R_{LOAD} \geq 4$ kΩ, Follower configuration	-	2.8	5	µs
$t_{S_OPAM_VOUT}$	ADC sampling time when reading the OPAMP output			400	-	-	ns

Table 73. Operational amplifier characteristics(1) (continued)

Symbol	Parameter	Condition	Min	Typ	Max	Unit
PGA gain	Non inverting gain value	-	-	2	-	-
			-	4	-	
			-	8	-	
			-	16	-	
$R_{network}$	R2/R1 internal resistance values in PGA mode (3)	Gain=2	-	5.4/5.4	-	kΩ
		Gain=4	-	16.2/5.4	-	
		Gain=8	-	37.8/5.4	-	
		Gain=16	-	40.5/2.7	-	
PGA gain error	PGA gain error	-	-1%	-	1%	%
I_{bias}	OPAMP input bias current	-	-	-	±0.2(4)	µA
PGA BW	PGA bandwidth for different non inverting gain	PGA Gain = 2, Cload = 50pF, Rload = 4 KΩ	-	4	-	MHz
		PGA Gain = 4, Cload = 50pF, Rload = 4 KΩ	-	2	-	
		PGA Gain = 8, Cload = 50pF, Rload = 4 KΩ	-	1	-	
		PGA Gain = 16, Cload = 50pF, Rload = 4 KΩ	-	0.5	-	
V_n	Voltage noise density	@ 1kHz, Output loaded with 4 KΩ	-	109	-	$\frac{nV}{\sqrt{Hz}}$
		@ 10kHz, Output loaded with 4 KΩ	-	43	-	

1. Guaranteed by design.
2. The saturation voltage can also be limited by the I_{LOAD} (drive current).
3. R2 is the internal resistance between OPAMP output and OPAMP inverting input.
   R1 is the internal resistance between OPAMP inverting input and ground. The PGA gain =1+R2/R1.
4. Mostly TTa I/O leakage, when used in analog mode.

Figure 36. OPAMP voltage noise versus frequency

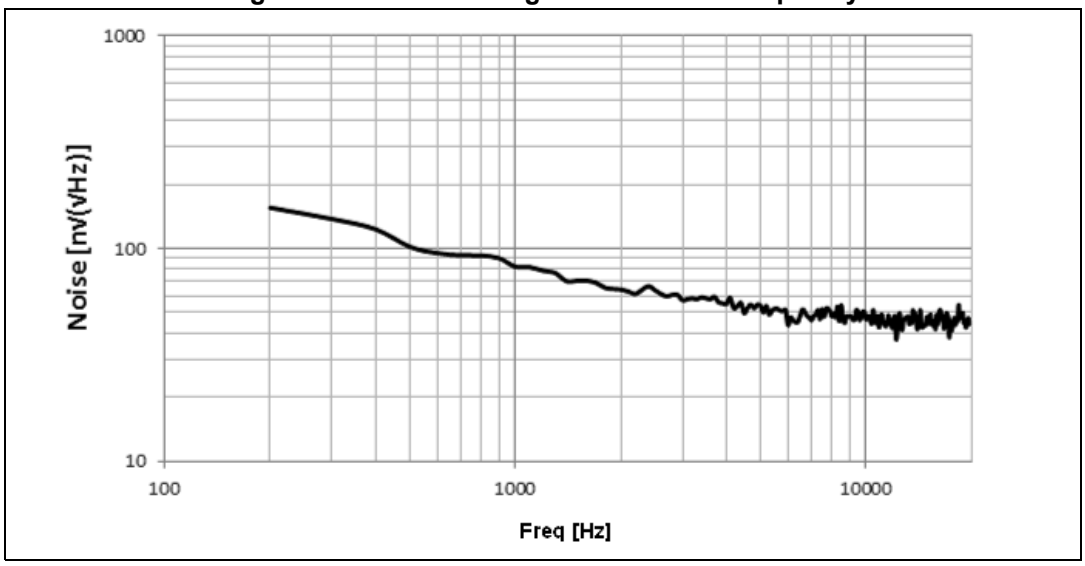

6.3.22 Temperature sensor characteristics

Table 74. TS characteristics

Symbol	Parameter	Min	Typ	Max	Unit
T_L(1)	V_{SENSE} linearity with temperature	-	±1	±2	°C
Avg_Slope(1)	Average slope	4.0	4.3	4.6	mV/°C
V_{25}	Voltage at 25 °C	1.34	1.43	1.52	V
t_{START}(1)	Startup time	4	-	10	µs
T_{S_temp}(1)(2)	ADC sampling time when reading the temperature	2.2	-	-	µs

1. Guaranteed by design.
2. Shortest sampling time can be determined in the application by multiple iterations.

Table 75. Temperature sensor calibration values

Calibration value name	Description	Memory address
TS_CAL1	TS ADC raw data acquired at temperature of 30 °C, V_{DDA}= 3.3 V	0x1FFF F7B8 - 0x1FFF F7B9
TS_CAL2	TS ADC raw data acquired at temperature of 110 °C V_{DDA}= 3.3 V	0x1FFF F7C2 - 0x1FFF F7C3

6.3.23 V_{BAT} monitoring characteristics

Table 76. V_{BAT} monitoring characteristics

Symbol	Parameter	Min	Typ	Max	Unit
R	Resistor bridge for V_{BAT}	-	50	-	KΩ
Q	Ratio on V_{BAT} measurement	-	2	-	
Er(1)	Error on Q	-1	-	+1	%
T_{S_vbat}(1)(2)	ADC sampling time when reading the V_{BAT} 1mV accuracy	2.2	-	-	µs

1. Guaranteed by design.
2. Shortest sampling time can be determined in the application by multiple iterations.

7 Package information

In order to meet environmental requirements, ST offers these devices in different grades of ECOPACK® packages, depending on their level of environmental compliance. ECOPACK® specifications, grade definitions and product status are available at: *www.st.com*. ECOPACK® is an ST trademark.

7.1 WLCSP49 package information

WLCSP49 is a 49-pin, 3.417 x 3.151 mm, 0.4 mm pitch wafer level chip scale package.

Figure 37. WLCSP49 outline

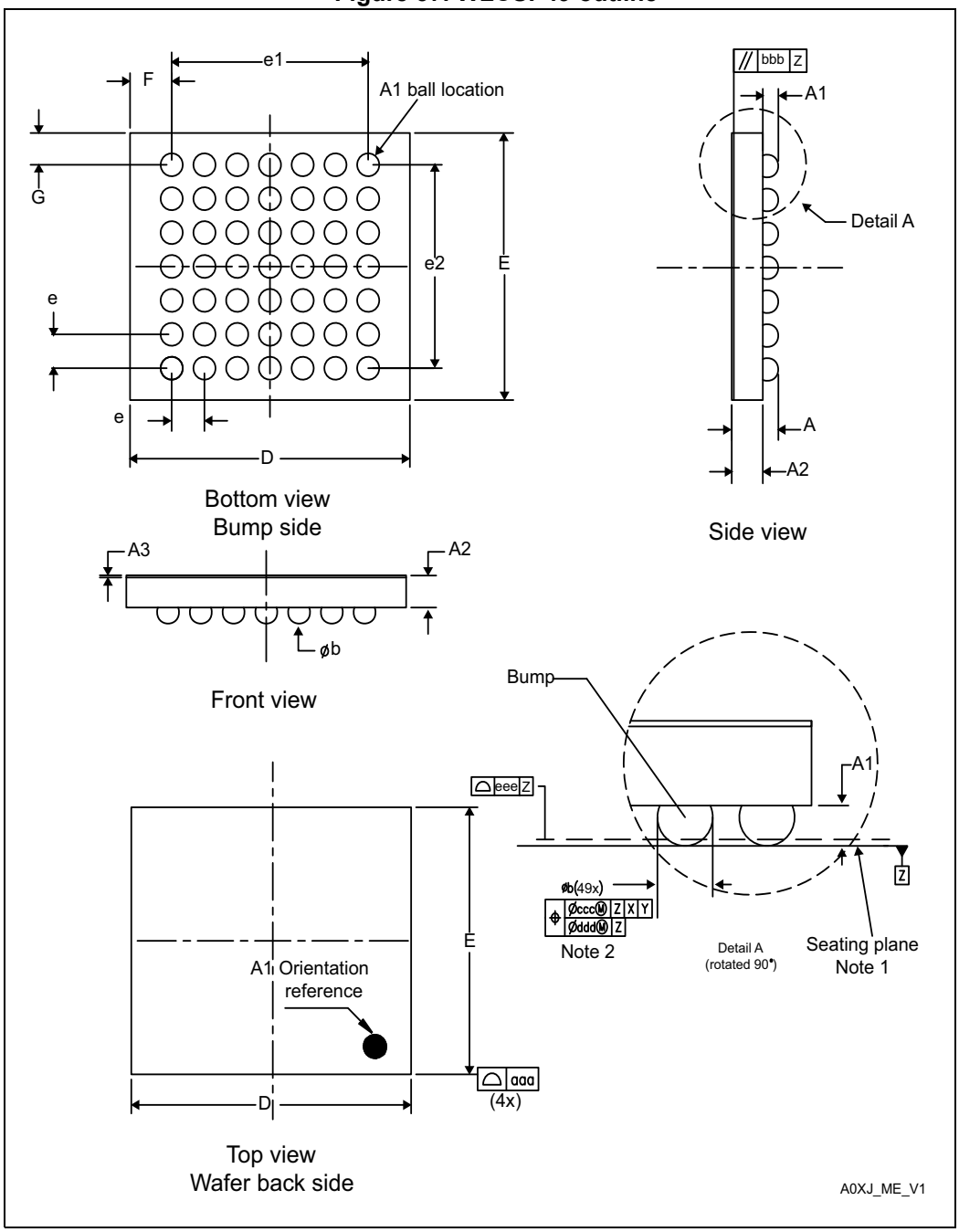

1. Drawing is not to scale.

Table 77. WLCSP49 mechanical data

Symbol	millimeters			inches[1]		
	Min	Typ	Max	Min	Typ	Max
A	0.525	0.555	0.585	0.0207	0.0219	0.0230
A1	-	0.175	-	-	0.0069	-
A2	-	0.380	-	-	0.0150	-
A3[2]	-	0.025	-	-	0.0010	-
b[3]	0.220	0.250	0.280	0.0087	0.0098	0.0110
D	3.382	3.417	3.452	0.1331	0.1345	0.1359
E	3.116	3.151	3.186	0.1227	0.1241	0.1254
e	-	0.400	-	-	0.0157	-
e1	-	2.400	-	-	0.0945	-
e2	-	2.400	-	-	0.0945	-
F	-	0.5085	-	-	0.0200	-
G	-	0.3755	-	-	0.0148	-
aaa	-	-	0.100	-	-	0.0039
bbb	-	-	0.100	-	-	0.0039
ccc	-	-	0.100	-	-	0.0039
ddd	-	-	0.050	-	-	0.0020
eee	-	-	0.050	-	-	0.0020

1. Values in inches are converted from mm and rounded to 4 decimal digits.
2. Back side coating.
3. Dimension is measured at the maximum bump diameter parallel to primary datum Z.

Figure 38. WLCSP49 recommended footprint

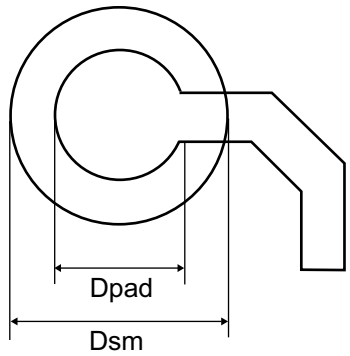

Table 78. WLCSP49 recommended PCB design rules (0.4 mm pitch)

Dimension	Recommended values
Pitch	0.4
Dpad	260 µm max. (circular)
	220 µm recommended
Dsm	300 µm min. (for 260 µm diameter pad)
PCB pad design	Non-solder mask defined via underbump allowed.

Device marking for WLCSP49

The following figure gives an example of topside marking orientation versus ball A1 identifier location.

The printed markings may differ depending on the supply chain.

Other optional marking or inset/upset marks, which identify the parts throughout supply chain operations, are not indicated below.

Figure 39. WLCSP49 marking example (package top view)

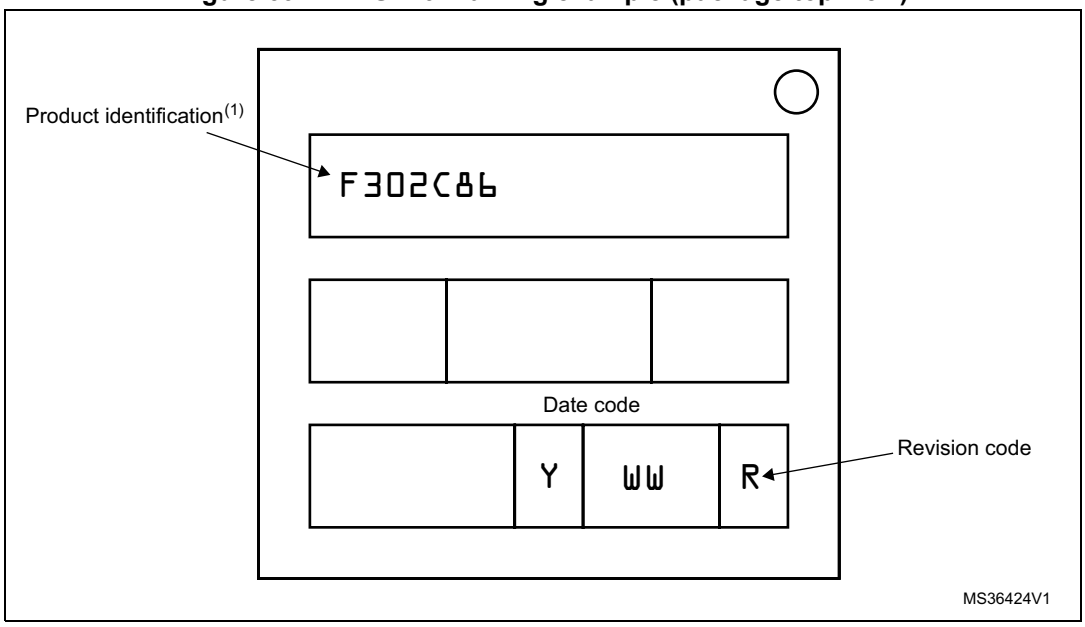

1. Parts marked as ES or E or accompanied by an engineering sample notification letter are not yet qualified and therefore not approved for use in production. ST is not responsible for any consequences resulting from such use. In no event will ST be liable for the customer using any of these engineering samples in production. STs Quality department must be contacted prior to any decision to use these engineering samples to run a qualification activity.

7.2 LQFP64 package information

LQFP64 is a 64-pin, 10 x 10 mm low-profile quad flat package.

Figure 40. LQFP64 outline

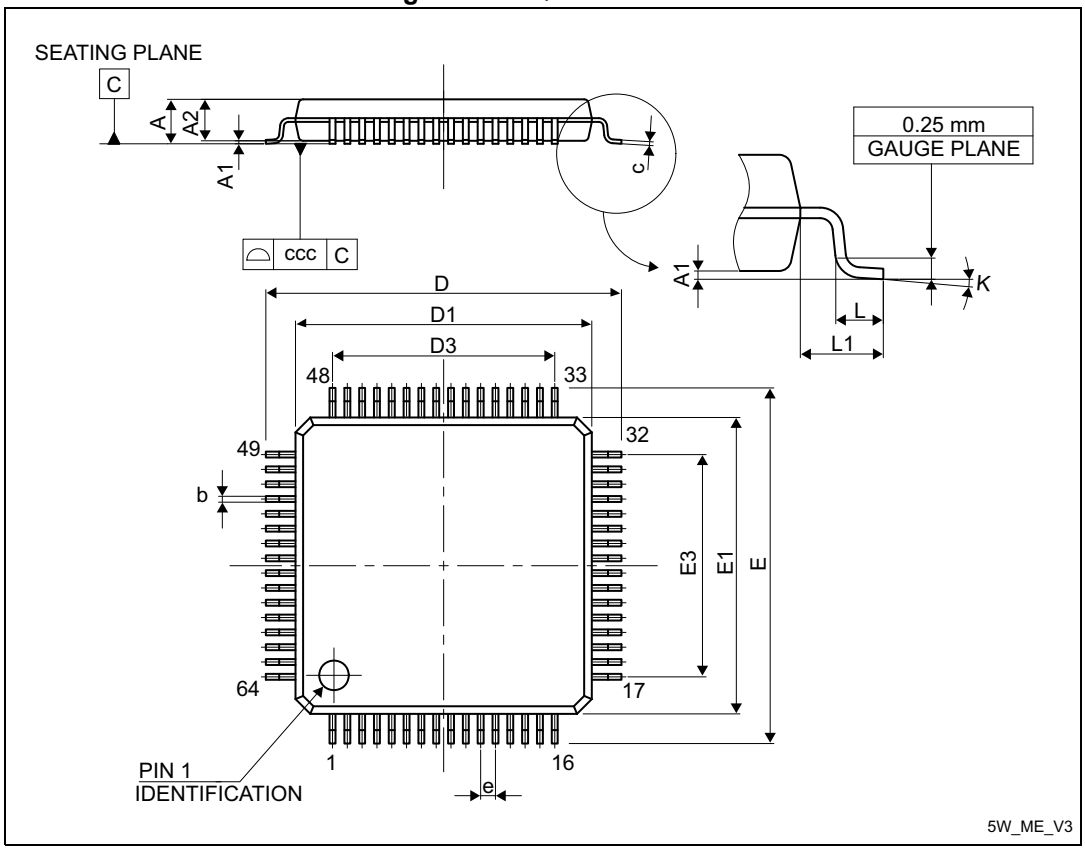

1. Drawing is not to scale.

Table 79. LQFP64 mechanical data

Symbol	millimeters			inches(1)		
	Min	Typ	Max	Min	Typ	Max
A	-	-	1.600	-	-	0.0630
A1	0.050	-	0.150	0.0020	-	0.0059
A2	1.350	1.400	1.450	0.0531	0.0551	0.0571
b	0.170	0.220	0.270	0.0067	0.0087	0.0106
c	0.090	-	0.200	0.0035	-	0.0079
D	-	12.000	-	-	0.4724	-
D1	-	10.000	-	-	0.3937	-
D3	-	7.500	-	-	0.2953	-
E	-	12.000	-	-	0.4724	-
E1	-	10.000	-	-	0.3937	-

Table 79. LQFP64 mechanical data (continued)

Symbol	millimeters			inches[1]		
	Min	Typ	Max	Min	Typ	Max
E3	-	7.500	-	-	0.2953	-
e	-	0.500	-	-	0.0197	-
K	0°	3.5°	7°	0°	3.5°	7°
L	0.450	0.600	0.750	0.0177	0.0236	0.0295
L1	-	1.000	-	-	0.0394	-
ccc	-	-	0.080	-	-	0.0031

1. Values in inches are converted from mm and rounded to 4 decimal digits.

Figure 41. LQFP64 recommended footprint

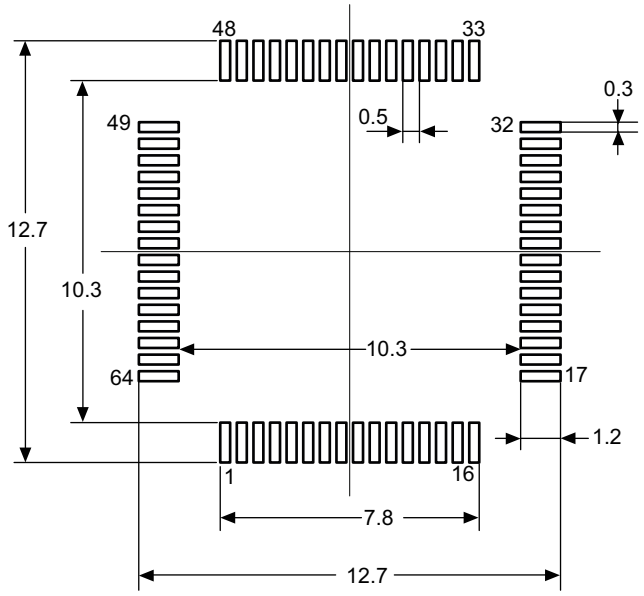

1. Dimensions are expressed in millimeters.

Device marking for LQFP64

The following figure gives an example of topside marking orientation versus pin 1 identifier location.

The printed markings may differ depending on the supply chain.

Other optional marking or inset/upset marks, which identify the parts throughout supply chain operations, are not indicated below.

Figure 42. LQFP64 marking example (package top view)

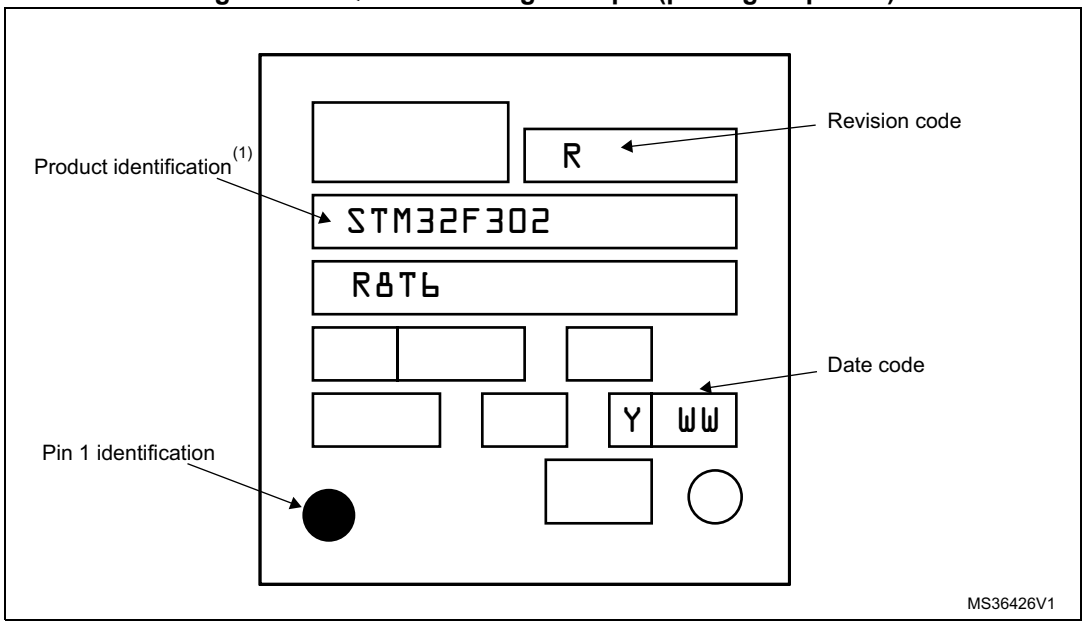

1. Parts marked as ES or E or accompanied by an engineering sample notification letter are not yet qualified and therefore not approved for use in production. ST is not responsible for any consequences resulting from such use. In no event will ST be liable for the customer using any of these engineering samples in production. STs Quality department must be contacted prior to any decision to use these engineering samples to run a qualification activity.

7.3 LQFP48 package information

LQFP48 is a 48-pin, 7 x 7 mm low-profile quad flat package.

Figure 43. LQFP48 outline

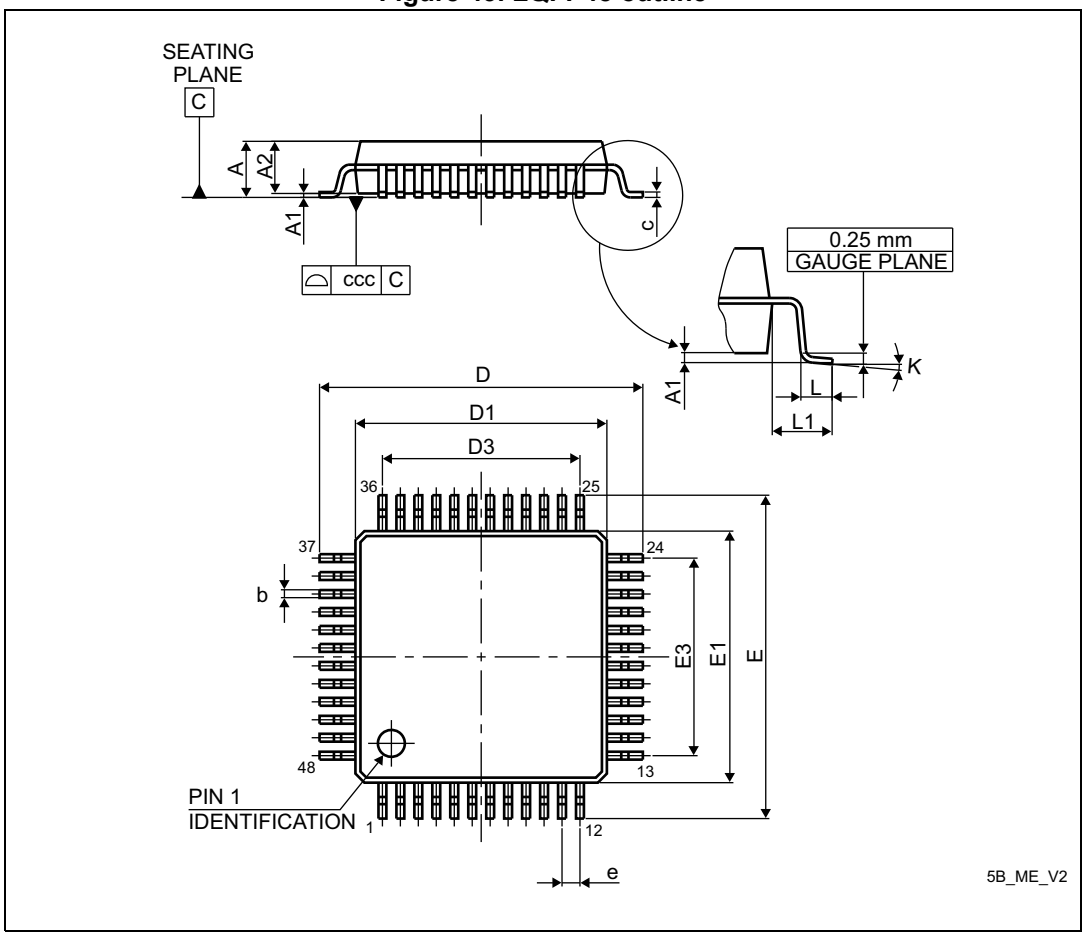

1. Drawing is not to scale.

Table 80. LQFP48 mechanical data

Symbol	millimeters			inches[1]		
	Min	Typ	Max	Min	Typ	Max
A	-	-	1.600	-	-	0.0630
A1	0.050	-	0.150	0.0020	-	0.0059
A2	1.350	1.400	1.450	0.0531	0.0551	0.0571
b	0.170	0.220	0.270	0.0067	0.0087	0.0106
c	0.090	-	0.200	0.0035	-	0.0079
D	8.800	9.000	9.200	0.3465	0.3543	0.3622
D1	6.800	7.000	7.200	0.2677	0.2756	0.2835
D3	-	5.500	-	-	0.2165	-
E	8.800	9.000	9.200	0.3465	0.3543	0.3622
E1	6.800	7.000	7.200	0.2677	0.2756	0.2835
E3	-	5.500	-	-	0.2165	-
e	-	0.500	-	-	0.0197	-
L	0.450	0.600	0.750	0.0177	0.0236	0.0295
L1	-	1.000	-	-	0.0394	-
k	0°	3.5°	7°	0°	3.5°	7°
ccc	-	-	0.080	-	-	0.0031

1. Values in inches are converted from mm and rounded to 4 decimal digits.

Figure 44. LQFP48 recommended footprint

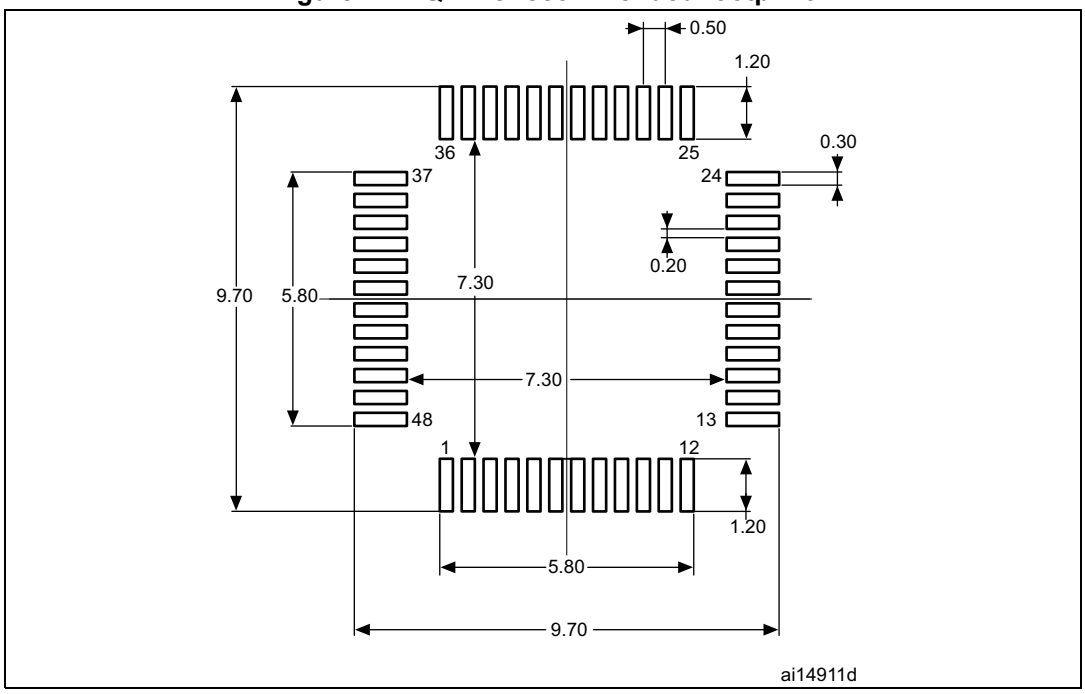

1. Dimensions are expressed in millimeters.

Device marking for LQFP48

The following figure gives an example of topside marking orientation versus pin 1 identifier location.

The printed markings may differ depending on the supply chain.

Other optional marking or inset/upset marks, which identify the parts throughout supply chain operations, are not indicated below.

Figure 45. LQFP48 marking example (package top view)

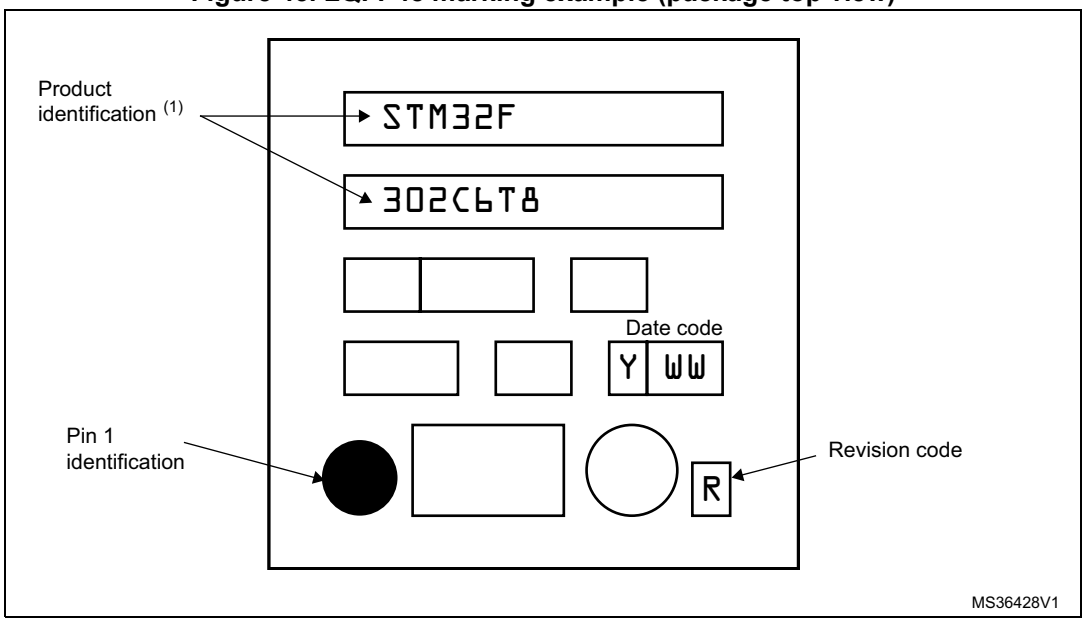

1. Parts marked as ES or E or accompanied by an engineering sample notification letter are not yet qualified and therefore not approved for use in production. ST is not responsible for any consequences resulting from such use. In no event will ST be liable for the customer using any of these engineering samples in production. STs Quality department must be contacted prior to any decision to use these engineering samples to run a qualification activity.

7.4 UFQFPN32 package information

UFQFPN32 is 32-pin, 5x5 mm, 0.5 mm pitch ultra thin fine pitch quad flat package.

Figure 46. UFQFPN32 outline

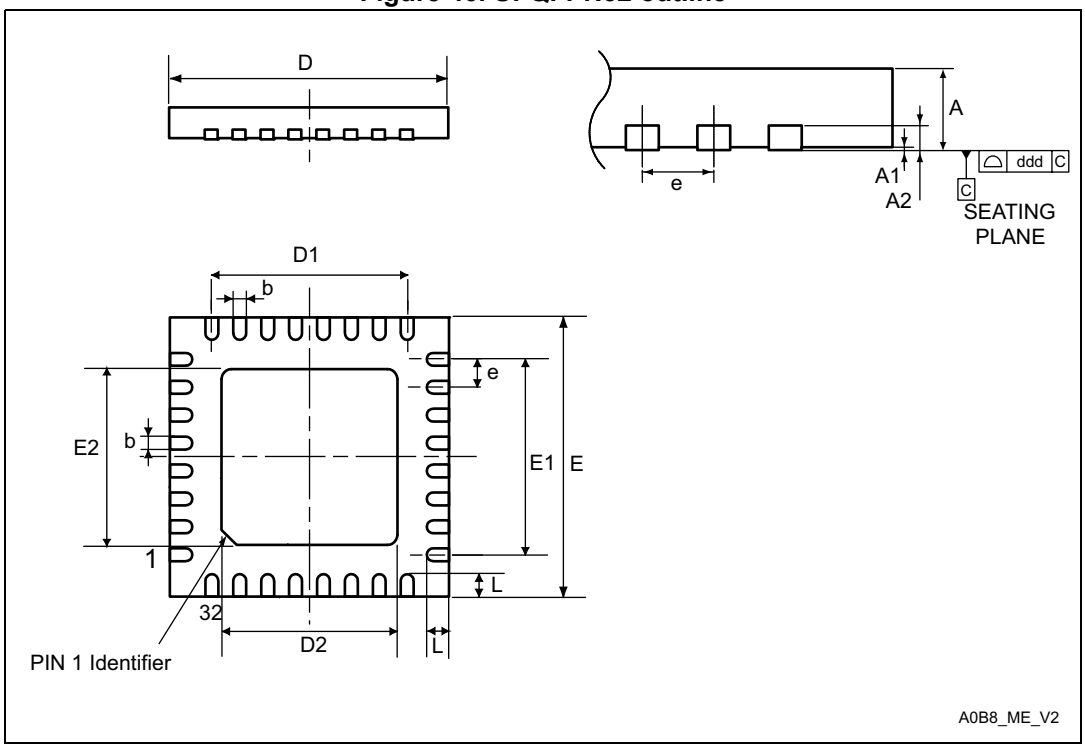

1. Drawing is not to scale.
2. All leads/pads should also be soldered to the PCB to improve the lead/pad solder joint life.
3. There is an exposed die pad on the underside of the UFQFPN package. It is recommended to connect and solder this back-side pad to PCB ground.

Table 81. UFQFPN32 mechanical data

Symbol	millimeters			inches[1]		
	Min	Typ	Max	Min	Typ	Max
A	0.500	0.550	0.600	0.0197	0.0217	0.0236
A1	0.000	0.020	0.050	0.0000	0.0008	0.0020
A3	-	0.152	-	-	0.0060	-
b	0.180	0.230	0.280	0.0071	0.0091	0.0110
D	4.900	5.000	5.100	0.1929	0.1969	0.2008
D1	3.400	3.500	3.600	0.1339	0.1378	0.1417
D2	3.400	3.500	3.600	0.1339	0.1378	0.1417
E	4.900	5.000	5.100	0.1929	0.1969	0.2008
E1	3.400	3.500	3.600	0.1339	0.1378	0.1417
E2	3.400	3.500	3.600	0.1339	0.1378	0.1417
e	-	0.500	-	-	0.0197	-
L	0.300	0.400	0.500	0.0118	0.0157	0.0197
ddd	-	-	0.080	-	-	0.0031

1. Values in inches are converted from mm and rounded to 4 decimal digits.

Figure 47. UFQFPN32 recommended footprint

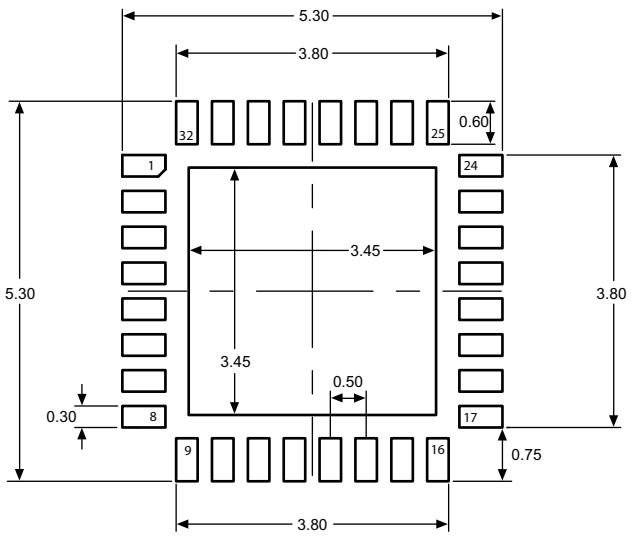

1. Dimensions are expressed in millimeters.

Device marking for UFQFPN32

The following figure gives an example of topside marking orientation versus pin 1 identifier location.

The printed markings may differ depending on the supply chain.

Other optional marking or inset/upset marks, which identify the parts throughout supply chain operations, are not indicated below.

Figure 48. UFQFPN32 marking example (package top view)

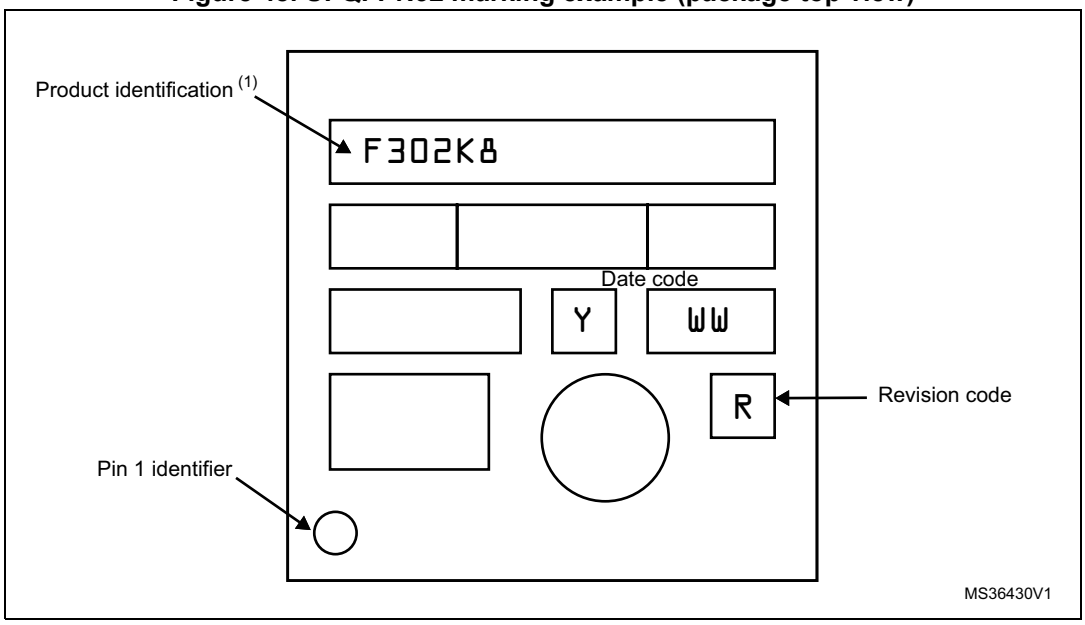

1. Parts marked as ES or E or accompanied by an engineering sample notification letter are not yet qualified and therefore not approved for use in production. ST is not responsible for any consequences resulting from such use. In no event will ST be liable for the customer using any of these engineering samples in production. STs Quality department must be contacted prior to any decision to use these engineering samples to run a qualification activity.

7.5 Thermal characteristics

The maximum chip junction temperature ($T_J$max) must never exceed the values given in *Table 23: General operating conditions*.

The maximum chip-junction temperature, T_J max, in degrees Celsius, may be calculated using the following equation:

$$T_J \text{ max} = T_A \text{ max} + (P_D \text{ max} \times \Theta_{JA})$$

Where:

- T_A max is the maximum ambient temperature in °C,
- Θ_{JA} is the package junction-to-ambient thermal resistance, in °C/W,
- P_D max is the sum of P_{INT} max and $P_{I/O}$ max (P_D max = P_{INT} max + $P_{I/O}$max),
- P_{INT} max is the product of I_{DD} and V_{DD}, expressed in Watts. This is the maximum chip internal power.

$P_{I/O}$ max represents the maximum power dissipation on output pins where:

$$P_{I/O} \text{ max} = \Sigma (V_{OL} \times I_{OL}) + \Sigma((V_{DD} - V_{OH}) \times I_{OH}),$$

taking into account the actual V_{OL} / I_{OL} and V_{OH} / I_{OH} of the I/Os at low and high level in the application.

Table 82. Package thermal characteristics

Symbol	Parameter	Value	Unit
Θ_{JA}	**Thermal resistance junction-ambient** LQFP64 - 10 × 10 mm / 0.5 mm pitch	45	°C/W
	Thermal resistance junction-ambient LQFP48 - 7 × 7 mm	55	
	Thermal resistance junction-ambient WCSP49 - 3.4 x 3.4 mm	49	
	Thermal resistance junction-ambient UFQFN32 - 5 x 5 mm	37	

7.5.1 Reference document

JESD51-2 Integrated Circuits Thermal Test Method Environment Conditions - Natural Convection (Still Air). Available from www.jedec.org

7.5.2 Selecting the product temperature range

When ordering the microcontroller, the temperature range is specified in the ordering information scheme shown in *Section 8: Ordering information*.

Each temperature range suffix corresponds to a specific guaranteed ambient temperature at maximum dissipation and, to a specific maximum junction temperature.

As applications do not commonly use the STM32F302x6 STM32F302x8 at maximum dissipation, it is useful to calculate the exact power consumption and junction temperature to determine which temperature range will be best suited to the application.

The following examples show how to calculate the temperature range needed for a given application.

Example 1: High-performance application

Assuming the following application conditions:

Maximum ambient temperature T_{Amax} = 82 °C (measured according to JESD51-2), I_{DDmax} = 50 mA, V_{DD} = 3.5 V, maximum 3 I/Os used at the same time in output at low level with I_{OL} = 8 mA, V_{OL}= 0.4 V and maximum 2 I/Os used at the same time in output at low level with I_{OL} = 20 mA, V_{OL}= 1.3 V

P_{INTmax} = 50 mA × 3.5 V= 175 mW

P_{IOmax} = 3 × 8 mA × 0.4 V + 2 × 20 mA × 1.3 V = 61.6 mW

This gives: P_{INTmax} = 175 mW and P_{IOmax} = 61.6 mW:

P_{Dmax} = 175 + 61.6 = 236.6 mW

Thus: P_{Dmax} = 236.6 mW

Using the values obtained in *Table 82* T_{Jmax} is calculated as follows:

– For LQFP64, 45°C/W

T_{Jmax} = 82 °C + (45°C/W × 236.6 mW) = 82°C + 10.65 °C = 92.65°C

This is within the range of the suffix 6 version parts (–40 < T_J < 105 °C).

In this case, parts must be ordered at least with the temperature range suffix 6 (see *Section 8: Ordering information*).

Example 2: High-temperature application

Using the same rules, it is possible to address applications that run at high ambient temperatures with a low dissipation, as long as junction temperature T_J remains within the specified range.

Assuming the following application conditions:

Maximum ambient temperature T_{Amax} = 115 °C (measured according to JESD51-2), I_{DDmax} = 20 mA, V_{DD} = 3.5 V, maximum 9 I/Os used at the same time in output at low level with I_{OL} = 8 mA, V_{OL}= 0.4 V

P_{INTmax} = 20 mA × 3.5 V= 70 mW

P_{IOmax} = 9 × 8 mA × 0.4 V = 28.8 mW

This gives: P_{INTmax} = 70 mW and P_{IOmax} = 28.8 mW:

P_{Dmax} = 70 + 28.8 = 98.8 mW

Thus: P_{Dmax} = 98.8 mW

Using the values obtained in *Table 82* T_{Jmax} is calculated as follows:

– For LQFP100, 45°C/W

T_{Jmax} = 115°C + (45°C/W × 98.8 mW) = 115 °C + 4.44°C = 119.44°C

This is within the range of the suffix 7 version parts (–40 < T_J < 125 °C).

In this case, parts must be ordered at least with the temperature range suffix 7 (see *Section 8: Ordering information*).

8 Ordering information

Table 83. Ordering information scheme

Example: STM32 F 302 K 8 T 6 xxx

Device family

STM32 = Arm®-based 32-bit microcontroller

Product type

F = general-purpose

Device subfamily

302 = STM32F302xx, 2.0 to 3.6 V operating voltage

Pin count

K = 32 pins

C = 48 or 49 pins

R = 64 pins

Flash memory size

6 = 32 Kbytes of Flash memory

8 = 64 Kbytes of Flash memory

Package

T = LQFP

Y= WLCSP

U= UFQFPN

Temperature range

6 = Industrial temperature range, –40 to 85 °C

7 = Industrial temperature range, –40 to 105 °C

Options

xxx = programmed parts

TR = tape and reel

9 Revision history

Table 84. Document revision history

Date	Revision	Changes
10-Apr-2014	1	Initial release.
13-May-2014	2	Updated *Table 13: STM32F302x6/8 pin definitions*. Added the input voltage on Boot0 pin in *Table 20: Voltage characteristics*.
02-Dec-2014	3	Applied the following updates: – added “Interconnect matrix” to *Features*, – updated the timers-related information in *Table 2: STM32F302x6/8 device features and peripheral counts*, – updated *Figure 1: DS9896 block diagram*, – updated *Section 3.5.1: Power supply schemes* and added *Table 3: External analog supply values for analog peripherals*, – added a table footnote about touch sensing sensitivity for pins PA4 and PA6 in *Table 13: STM32F302x6/8 pin definitions*, – renamed USARTx_RTS as USARTx_RTS_DE where x=1, 2 or 3, – updated I_{DD} values at 48 MHz (Supply current in Run mode, executing from RAM/External clock (HSE bypass)) in *Table 29: Typical and maximum current consumption from VDD supply at VDD = 3.6V*, – added I_{DDA} parameter in *Table 66: ADC characteristics* and added *Figure 31: ADC typical current consumption in single-ended and differential modes*, – updated *Figure 18: HSI oscillator accuracy characterization results for soldered parts* and *Table 43: HSI oscillator characteristics*, – updated t_{WUSTOP} maximum values in *Table 38: Low-power mode wakeup timings*, – updated the Supply current in Stop mode values for TA=25 deg. Celsius in *Table 31: Typical and maximum V_{DD} consumption in Stop and Standby modes*, – replaced all occurrences of V_{DDA} monitoring with V_{DDA} supervisor in *Section 6: Electrical characteristics*, – added footnotes to *Figure : Device marking for UFQFPN32*, – updated the marking information (*Figure 39: WLCSP49 marking example (package top view)*, *Figure 45: LQFP48 marking example (package top view)*, *Figure 48: UFQFPN32 marking example (package top view)*).
10-Feb-2015	4	Updated: – the values for External clock (HSE bypass) at 48 MHz in *Table 29: Typical and maximum current consumption from VDD supply at VDD = 3.6V*. – *Table 41: HSE oscillator characteristics*. – *Table 46: Flash memory characteristics*. – *Table 72: Comparator characteristics*. Added: – *Figure 35: Maximum V_{REFINT} scaler startup time from power down*.

Table 84. Document revision history (continued)

Date	Revision	Changes
04-Jun-2015	5	Updated: – AF9 value for PA1, PA3 and PA9 in *Table 14: Alternate functions for Port A*, – the structure of *Section 7: Package information*.
22-Jul-2016	6	Updated footnotes on: – All documents tables by removing the “not tested in production” specification. – *Table 13: STM32F302x6/8 pin definitions*. – *Table 20: Voltage characteristics*. – *Table 72: Comparator characteristics*. – *Figure 4: STM32F302x6/8 UFQFN32 pinout*. – *Figure 5: STM32F302x6/8 LQFP48 pinout*. – *Figure 6: STM32F302x6/8 LQFP64 pinout*. – *Figure 7: STM32F302x6/8 WLCSP49 ballout*. – *Figure 24: Recommended NRST pin protection*. – *Figure 46: UFQFPN32 outline*. Updated tables: – Updated V_{REFINT} line on *Table 27: Embedded internal reference voltage*. – Updated “Conditions” column on *Table 42: LSE oscillator characteristics (f_{LSE} = 32.768 kHz)*. – Added CMIR and t_{STAB} lines on *Table 66: ADC characteristics*. – Updated R_{LOAD} line on *Table 71: DAC characteristics*. – Updated VOH_{SAT} and VOL_{SAT} lines on *Table 73: Operational amplifier characteristics*. Updated figures: – *Figure 2: Clock tree*. – *Figure 7: STM32F302x6/8 WLCSP49 ballout*. – *Figure 21: Five volt tolerant (FT and FTf) I/O input characteristics - CMOS port*. – *Figure 24: Recommended NRST pin protection* Updated name of *Section 8: Ordering information*.

Table 84. Document revision history (continued)

Date	Revision	Changes
06-Jun-2017	7	– Updated *Section 7.4: UFQFPN32 package information* note 3 removed. – Updated *Section 7: Package information* adding information about other optional marking or inset/upset marks. – Updated note 1 below all the package device marking figures. – Updated *Table 52: I/O current injection susceptibility* note by “injection is not possible”. – Removed table “Wakeup time using USART”. – Updated *Figure 24: Recommended NRST pin protection* note about the 0.1uF capacitor.
09-Mar-2020	8	– Updated:*Section 1: Introduction*. – Updated *Section 7: Package information* for all package description – Updated footnotes for: – *Figure 39: WLCSP49 marking example (package top view)*. – *Figure 42: LQFP64 marking example (package top view)*. – *Figure 45: LQFP48 marking example (package top view)*. – *Figure 48: UFQFPN32 marking example (package top view)*. – Updated SRAM addresses in *Table 19: STM32F302x6 STM32F302x8 peripheral register boundary addresses*. – Updated *Table 13: STM32F302x6/8 pin definitions*. – Updated footnote *Table 58: IWDG min/max timeout period at 40 kHz (LSI)*. – Added new sentence below *Figure 46: UFQFPN32 outline*. – Updated *Table 44: LSI oscillator characteristics*.

IMPORTANT NOTICE – PLEASE READ CAREFULLY

STMicroelectronics NV and its subsidiaries (“ST”) reserve the right to make changes, corrections, enhancements, modifications, and improvements to ST products and/or to this document at any time without notice. Purchasers should obtain the latest relevant information on ST products before placing orders. ST products are sold pursuant to ST’s terms and conditions of sale in place at the time of order acknowledgement.

Purchasers are solely responsible for the choice, selection, and use of ST products and ST assumes no liability for application assistance or the design of Purchasers’ products.

No license, express or implied, to any intellectual property right is granted by ST herein.

Resale of ST products with provisions different from the information set forth herein shall void any warranty granted by ST for such product.

ST and the ST logo are trademarks of ST. For additional information about ST trademarks, please refer to *www.st.com/trademarks*. All other product or service names are the property of their respective owners.

Information in this document supersedes and replaces information previously supplied in any prior versions of this document.

© 2020 STMicroelectronics – All rights reserved