STBB3JCC

2 A, high efficiency single inductor buck-boost DC-DC converter and high brightness WLED driver

Datasheet - production data



Flip Chip 20, pitch = 0.4 mm

Features

- 100 mV feedback signal
- Input voltage range from 1.8 V to 5.5 V
- 2 A output current at 3.3 V_{OUT} in buck mode (V_{IN}= 3.6 V to 5.5 V)
- 800 mA output current at 3.3 V_{OUT} in boost mode (V_{IN} ≥ 2.0 V)
- Typical efficiency higher than 94%
- Automatic transition between step-down and boost mode
- Adjustable output voltage from 1.2 V to 5.5 V
- Power save mode (PS) at light load
- 2.0 MHz fixed switching frequency
- Adjustable switching frequency up to 2.4 MHz (by external synchronous square signal)
- Device quiescent current less than 50 µA
- Load disconnect during shutdown
- Shutdown function and soft-start
- Shutdown current < 1 µA
- Available in Flip Chip 20, pitch = 0.4 mm

Applications

- HB WLED driver
- Single cell Li-Ion, two-cell and three-cell alkaline, Ni-MH powered devices
- Memory card supply
- Tablet, smartphones
- Digital cameras

Description

The STBB3JCC is a fixed frequency, high efficiency, buck-boost DC-DC converter which provides output voltages from 1.2 V to 5.5 V starting from input voltage from 1.8 V to 5.5 V. Thanks to very low sensing voltage, only 100 mV and very low $R_{DS(on)}$ of integrated power MOSFET, it achieves very high efficiency driving high brightness white LED in constant current mode. The device can operate with input voltages higher than, equal to, or lower than the output voltage making the product suitable for cell lithium-Ion applications where the output voltage is within the battery voltage range. The MODE pin allows the selection between auto mode and forced PWM mode, taking advantage from either lower power consumption or best dynamic performance. The device also includes soft-start control, thermal shutdown, and current limit. The STBB3JCC is packaged in Flip Chip 20 bumps with 2.5 x 1.75 mm.

Table 1. Device summary

Order code	Part number	Marking	Packing	Output voltage
STBB3JCCR	STBB3JCC	BB3C	Flip Chip20	Adjustable

This is information on a product in full production. www.st.com

Contents

1 Application schematic 4

2 Block diagram 5

3 Pin configuration 6

4 Absolute maximum ratings 7

5 Electrical characteristics 8

6 Typical performance characteristics 10

7 General description 15

7.1 Dual mode operation 15

7.2 External synchronization 16

7.3 Enable pin 16

7.4 Protection features 16

7.4.1 Soft-start and overcurrent 16

7.4.2 Undervoltage lockout 16

7.4.3 Overtemperature protection 17

8 Application information 17

8.1 Programming the output voltage 17

8.2 Programming the output constant current for HB WLED 17

8.3 Inductor selection 19

8.4 Input and output capacitor selection 19

8.5 Layout guidelines 20

9 Package information 23

10 Revision history 26

List of figures

Figure 1. Application schematic for adjustable output version . . . 4
Figure 2. Block diagram adjustable . . . 5
Figure 3. Pin connection top view . . . 6
Figure 4. Pin connection bottom view . . . 6
Figure 5. Efficiency vs. output current (power save mode enabled VOUT = 3.3 V) . . . 11
Figure 6. Efficiency vs. output current (power save mode disabled VOUT = 3.3 V) . . . 11
Figure 7. Efficiency vs. output current (PWM/auto mode V_{IN} = 1.8 V) . . . 11
Figure 8. Efficiency vs. output current (PWM/auto mode V_{IN} = 3.6 V) . . . 11
Figure 9. Efficiency vs. output current (PWM/auto mode V_{IN} = 5.0 V) . . . 11
Figure 10. Maximum output current vs. input voltage . . . 11
Figure 11. Line transient response @ VIN = 3 V to 3.6 V . . . 12
Figure 12. Line transient response @ VIN = 3.6 V to 3 V . . . 12
Figure 13. Line transient response @ VIN = 3.6 V to 4 V . . . 12
Figure 14. Line transient response @ VIN = 4 V to 3.6 V . . . 12
Figure 15. Load transient response @ VIN=1.8 V, IOUT = 100 to 300 mA . . . 12
Figure 16. Load transient response @ VIN=1.8 V, IOUT = 300 mA to 100 mA . . . 12
Figure 17. Load transient response @ VIN=3.6 V, IOUT = 100 to 300 mA . . . 13
Figure 18. Load transient response @ VIN=3.6 V, IOUT = 300 mA to 100 mA . . . 13
Figure 19. Load transient response @ VIN=5.5 V, IOUT = 100 to 300 mA . . . 13
Figure 20. Load transient response @ VIN=5.5 V, IOUT = 300 to 100 mA . . . 13
Figure 21. Startup after enable @ VIN=1.8 V . . . 13
Figure 22. Startup after enable @ VIN=3.6 V . . . 13
Figure 23. Startup after enable @ VIN=5.5 V . . . 14
Figure 24. Output voltage vs. output current . . . 14
Figure 25. OCP threshold . . . 14
Figure 26. 100 Hz PWM dimming function . . . 14
Figure 27. Startup 5 V_{IN} LED 1 A . . . 14
Figure 28. Startup 2.5 V_{IN} LED 1 A . . . 14
Figure 29. Auto mode vs. output current . . . 16
Figure 30. Application schematic . . . 17
Figure 31. Application schematic HB WLED driver . . . 18
Figure 32. Assembly layer . . . 20
Figure 33. Top layer . . . 20
Figure 34. Bottom layer . . . 21
Figure 35. Assembly layer for HB WLED . . . 21
Figure 36. Top layer for HB WLED . . . 22
Figure 37. Bottom layer for HB WLED . . . 22
Figure 38. Flip Chip 20 (2.5 x 1.75 mm) outline . . . 23
Figure 39. Flip Chip 20 (2.5 x 1.75 mm) recommended footprint . . . 25

1 Application schematic

Figure 1. Application schematic for adjustable output version

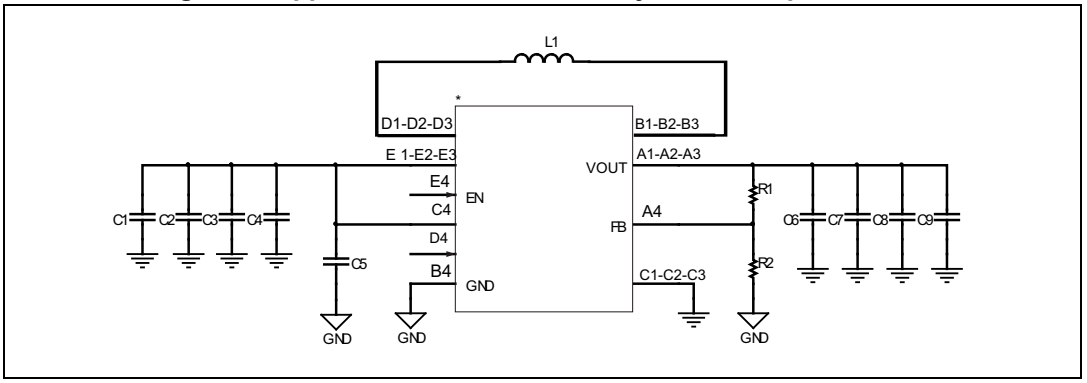

Table 2. Typical external components

Component	Manufacturer	Part number	Value	Size
C1,C2,C3, C4	Murata	GRM188R60J106ME84	10 µF	0603
C6, C7, C8, C9	TDK-EPC	C1608X5R1A106M		
C5	Standard capacitor		100 nF	0603
	TDK-EPC	C1608X7R1H104K		
L1(1)	Coilcraft	XFL4020-152MEB	1.5 µH	4 x 3.2 x 1.5 mm
	TDK-EPC	VLF403215MT-1R5N		4 x 4 x 2 mm
R1	Depending on the output voltage			0603
R2	Depending on the output voltage			0603

1. Inductor used for the maximum power capability. Optimized choice can be made according to the application conditions (see *Section 8*).

Note: All the above components refer to a typical application. Operation of the device is not limited to the choice of these external components.

2 Block diagram

Figure 2. Block diagram adjustable

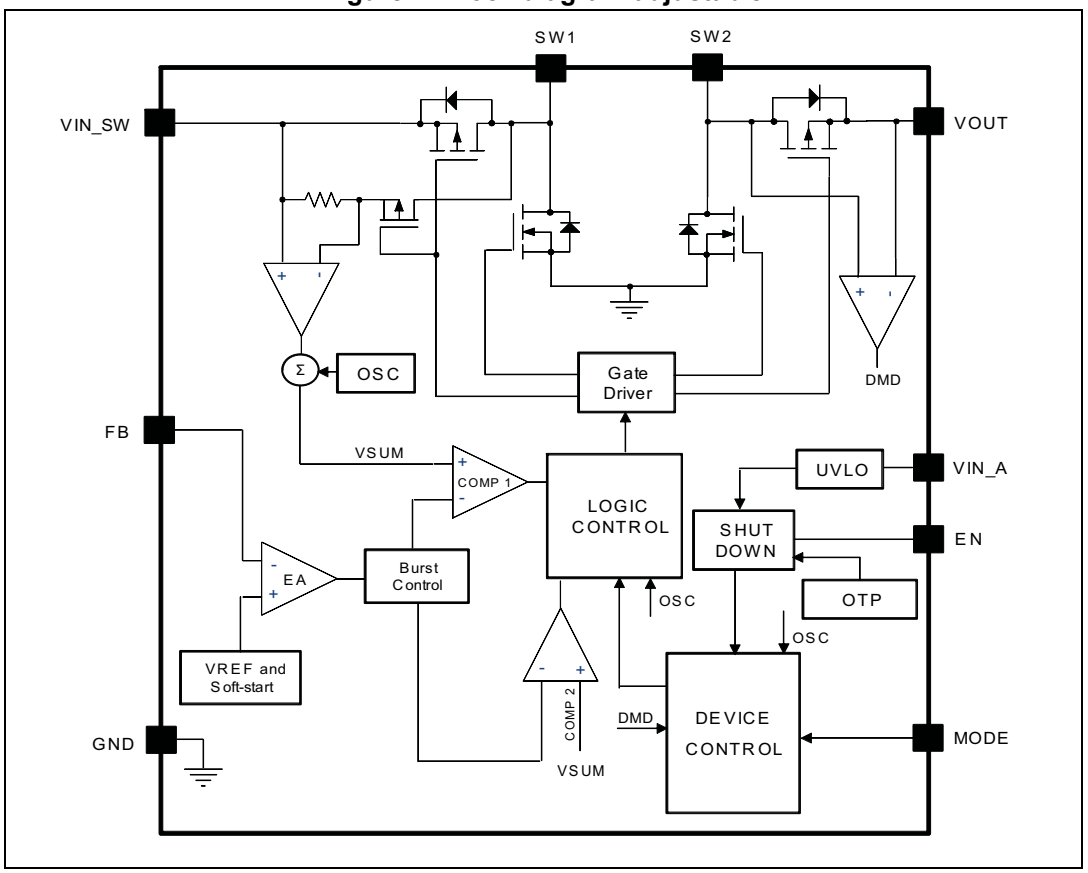

3 Pin configuration

Figure 3. Pin connection top view

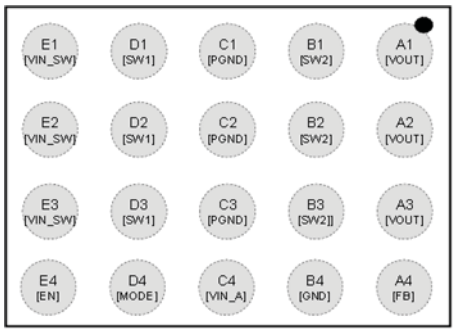

AM16823v1

Figure 4. Pin connection bottom view

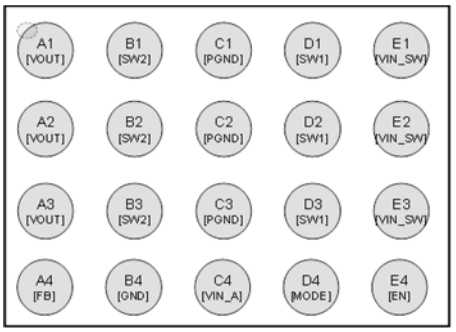

AM16824v1

Table 3. Pin description

Pin name	Pin	Description
VOUT	A1, A2, A3	Output voltage.
SW1	D1, D2, D3	Switch pin - internal switches are connected to this pin. Connect inductor between SW1 to SW2.
PGND	C1, C2, C3	Power ground.
SW2	B1, B2, B3	Switch pin - internal switches are connected to this pin. Connect inductor between SW1 and SW2.
EN	E4	Enable pin. Connect this pin to GND or a voltage lower than 0.4 V to shut down the IC. A voltage higher than 1.2 V is required to enable the IC.
MODE/SYNC	D4	The MODE pin selects auto transition mode and fixed frequency PWM mode. If the MODE pin is low, the STBB3JCC automatically switches between pulse-skipping and standard fixed frequency PWM according to the load level. If the MODE pin is pulled high, the STBB3JCC works always at fixed frequency. MODE pin must be pulled high if the STBB3JCC is used as HB WLED driver (constant current) for best dynamic performance. When a square wave is applied, this pin provides the clock signal for oscillator synchronization.
VIN_A	C4	Supply voltage for control stage. Connecting a capacitor of minimum 100 nF between VIN_A and GND.
VIN_SW	E1, E2, E3	Power input voltage.
GND	B4	Signal ground.
FB	A4	Feedback voltage.

4 Absolute maximum ratings

Table 4. Absolute maximum ratings

Symbol	Parameter	Value	Unit
VIN_A, VIN_SW	Supply voltage	-0.3 to 7.0	V
SW1,SW2	Switching nodes	-0.3 to 7.0	V
VOUT	Output voltage	-0.3 to 7.0	V
MODE, EN	Logic pins	-0.3 to 7.0	V
FB	Feedback pin for adjustable version	-0.3 to 1.5	V
ESD	Human body model	± 2000	V
T_{AMB}	Operating ambient temperature	-40 to 85	°C
T_J	Maximum operating junction temperature	150	°C
T_{STG}	Storage temperature	-65 to 150	°C

Note: Absolute maximum ratings are those values beyond which damage to the device may occur. Functional operation under these conditions is not implied.

Table 5. Thermal data

Symbol	Parameter	Value	Unit
$R_{th(JA)}$	Thermal resistance junction-ambient	84	°C/W

5 Electrical characteristics

V_{IN} = V_{INA} = V_{EN} = 3.6 V, V_{OUT} = 3.3 V, C_{IN} = 4x10 µF, C_{OUT} = 4 x 10 µF, C_{INA} = 100 nF, L1= 1.5 µH, T_A = - 40 °C to 85 °C (unless otherwise specified; typical values are referred to T_A = 25 °C).

Table 6. Electrical characteristics

Symbol	Parameter	Test conditions	Min.	Typ.	Max.	Unit
General section						
V_{IN}	Input voltage range		1.8		5.5	V
	Minimum input voltage for the startup	I_{OUT} = 600 mA, mode = V_{IN}		1.8	1.9	V
V_{UVLO}	Undervoltage lockout threshold	V_{INA} rising, I_{OUT} = 100 mA MODE = V_{IN};	1.5	1.6	1.7	V
		V_{INA} falling; I_{OUT} = 100 mA V_{MODE} = V_{IN}	1.4	1.5	1.6	
I_q	Quiescent current V_{IN} and V_{INA}	I_{OUT} = 0 A V_{MODE} = GND			50	µA
I_{SHDN}	Shutdown current	V_{EN} = GND		0.1	1	µA
V_{FB}	Feedback voltage	V_{IN} from 1.8 to 5.5 V	90	100	110	mV
f_{SW}	Switching frequency	T_A = 25 °C	1.8	2	2.2	MHz
	Frequency range for external synchronization		1.6		2.4	
I_{OUT}	Continuous output current(1)	V_{IN} from 1.8 to 5.5 V	600			mA
I_{SWL}	Switch current limitation	T_A = 25 °C	2.8	3	3.65	A
I_{PK}	Switch current limitation		2.3	2.5	2.7	A
I_{PS-PWM}	PS to PWM transition			730		mA
	PWM to PS transition			680		
Output voltage						
V_{OUT}	Output voltage range		1.2		5.5	V
$\%\Delta_{OUT}$	Maximum load regulation	V_{IN} = 2.5 to 5.5 V, V_{MODE} = V_{IN}	-1.5		+1.5	%
		V_{IN} = 2.5 to 5.5 V, V_{MODE} = GND suitable output current to keep PS operation	-3		+3	%
$\%V_{OUT}$	Maximum load regulation	I_{LOAD} = from 10 mA to 800 mA		± 0.5		%
V_{OPP-PS}	Peak-to-peak ripple in PS mode	I_{OUT} = 100 mA		100		mV

Table 6. Electrical characteristics (continued)

Symbol	Parameter	Test conditions	Min.	Typ.	Max.	Unit
I_{LKFB}	FB pin leakage current	V_{FB} = 5.5 V			9	µA
Control stage						
V_{IL}	Low-level input voltage (EN, MODE pins)				0.4	V
V_{IH}	High-level input voltage (EN, MODE pins)		1.2			V
I_{LK-I}	Input leakage current (EN, MODE pins)	V_{EN} = V_{MODE} = 5.5 V		0.01	1	µA
T_{ON}	Turn on-time(2)	V_{EN} from low to high, I_{OUT} = 10 mA		260	300	µs
Power switches						
$R_{DS(on)}$	P-channel on-resistance			100	300	mΩ
	N-channel on-resistance			100	300	mΩ
I_{LKG-P}	P-channel leakage current	V_{IN} = V_{OUT} = 5.5 V; V_{EN} = 0			1	µA
I_{LKG-N}	N-channel leakage current	V_{SW1} = V_{SW2} = 5.5 V; V_{EN} = 0			1	µA

1. Not tested in production. This value is guaranteed by correlation with $R_{DS(on)}$, peak current limit and operating input voltage.
2. Not tested in production.

6 Typical performance characteristics

Table 7. Table of graphs

Parameter	Test conditions	Reference
Efficiency	vs. output current (power save enabled, V_{IN} = 1.8 V, 3.6 V, 5.5 V/V_{OUT} = 3.3 V)	*Figure 5*
	vs. output current (power save disabled, V_{IN} = 1.8 V, 3.6 V, 5.5 V/V_{OUT} = 3.3 V)	*Figure 6*
	vs. output current (PWM/auto mode), V_{IN} = 1.8 V, V_{OUT} = 3.3 V	*Figure 7*
	vs. output current (PWM/auto mode), V_{IN} = 3.6 V, V_{OUT} = 3.3 V	*Figure 8*
	vs. output current (PWM/auto mode), V_{IN} = 5.5 V, V_{OUT} = 3.3 V	*Figure 9*
Maximum output current	vs. input voltage (V_{OUT} = 3.3 V, V_{OUT} = 5.0 V)	*Figure 10*
Waveforms	Line transient response (V_{IN} = 3.0 V to 3.6 V, V_{OUT} = 3.3 V, I_{OUT} = 300 mA)	*Figure 11*
	Line transient response (V_{IN} = 3.6 V to 3.0 V, V_{OUT} = 3.3 V, I_{OUT} = 300 mA)	*Figure 12*
	Line transient response (V_{IN} = 3.6 V to 4.0 V, V_{OUT} = 3.3 V, I_{OUT} = 300 mA)	*Figure 13*
	Line transient response (V_{IN} = 4.0 V to 3.6 V, V_{OUT} = 3.3 V, I_{OUT} = 300 mA)	*Figure 14*
	Load transient response V_{IN} = 1.8 V V_{OUT} = 3.3 V, I_{OUT} = 100 to 300 mA	*Figure 15*
	Load transient response V_{IN} = 1.8 V V_{OUT} = 3.3 V, I_{OUT} = 300 to 100 mA	*Figure 16*
	Load transient response V_{IN} = 3.6 V V_{OUT} = 3.3 V, I_{OUT} = 100 to 300 mA	*Figure 17*
	Load transient response V_{IN} = 3.6 V V_{OUT} = 3.3 V, I_{OUT} = 300 to 100 mA	*Figure 18*
	Load transient response V_{IN} = 5.5 V V_{OUT} = 3.3 V, I_{OUT} = 100 to 300 mA	*Figure 19*
	Load transient response V_{IN} = 5.5 V V_{OUT} = 3.3 V, I_{OUT} = 300 to 100 mA	*Figure 20*
	Startup after enable (V_{IN} = 1.8 V, V_{OUT} = 3.3 V, I_{OUT} = 10 mA)	*Figure 21*
	Startup after enable (V_{IN} = 3.6 V, V_{OUT} = 3.3 V, I_{OUT} = 10 mA)	*Figure 22*
	Startup after enable (V_{IN} = 5.5 V, V_{OUT} = 3.3 V, I_{OUT} = 10 mA)	*Figure 23*
Output voltage	vs. output current (V_{OUT} = 3.3 V)	*Figure 24*
HB LED driver	OCP threshold	*Figure 25*
	100 Hz PWM dimming function	*Figure 26*
	Startup 5 V_{IN} LED 1 A	*Figure 27*
	Startup 2.5 V_{IN} LED 1 A	*Figure 28*

Figure 5. Efficiency vs. output current (power save mode enabled V_{OUT} = 3.3 V)

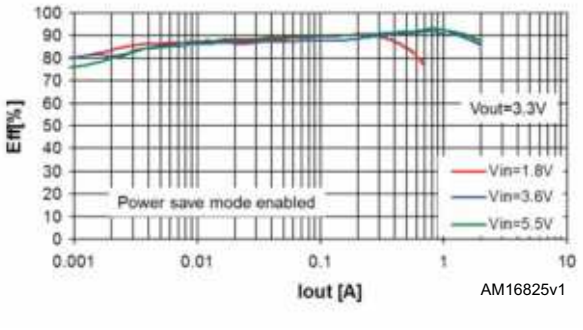

Figure 6. Efficiency vs. output current (power save mode disabled V_{OUT} = 3.3 V)

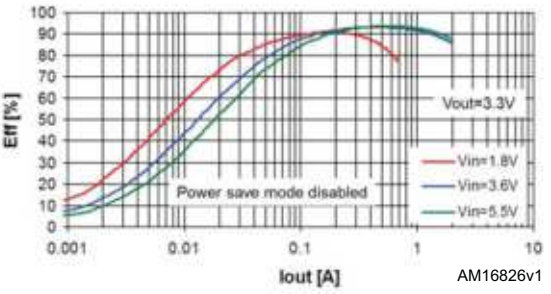

Figure 7. Efficiency vs. output current (PWM/auto mode V_{IN} = 1.8 V)

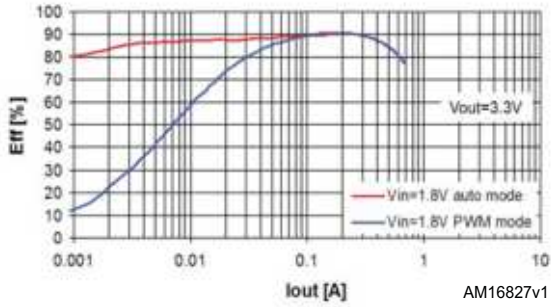

Figure 8. Efficiency vs. output current (PWM/auto mode V_{IN} = 3.6 V)

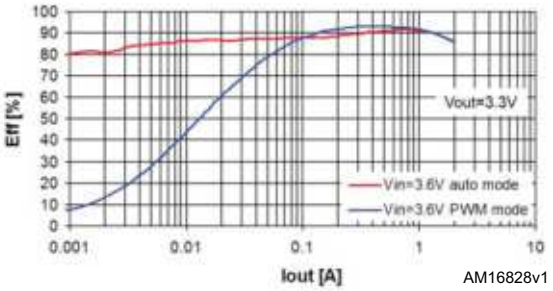

Figure 9. Efficiency vs. output current (PWM/auto mode V_{IN} = 5.0 V)

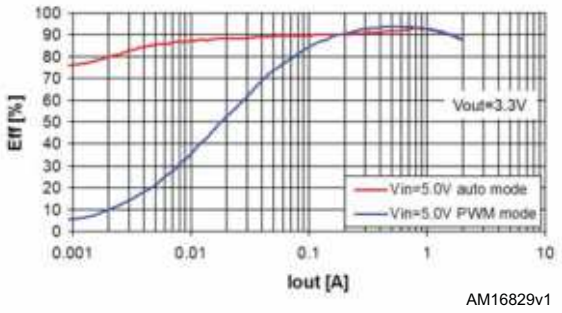

Figure 10. Maximum output current vs. input voltage

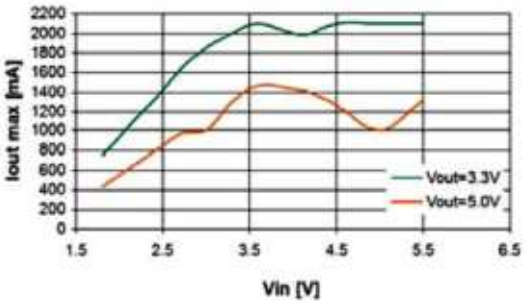

Figure 11. Line transient response @ V_{IN} = 3 V to 3.6 V

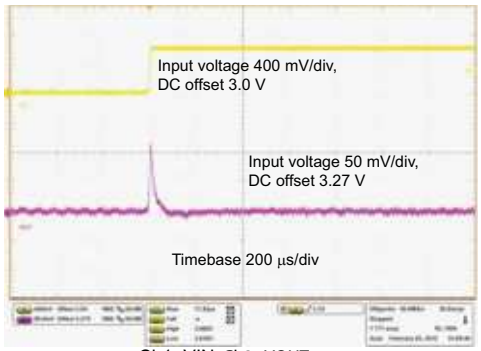

Ch1=VIN, Ch3=VOUT AM16831v1

Figure 12. Line transient response @ V_{IN} = 3.6 V to 3 V

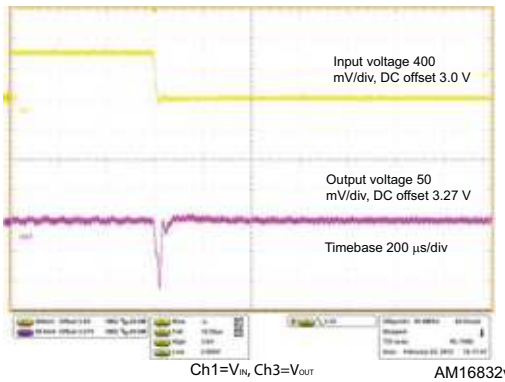

Ch1=V_{IN}, Ch3=V_{OUT} AM16832v1

Figure 13. Line transient response @ V_{IN} = 3.6 V to 4 V

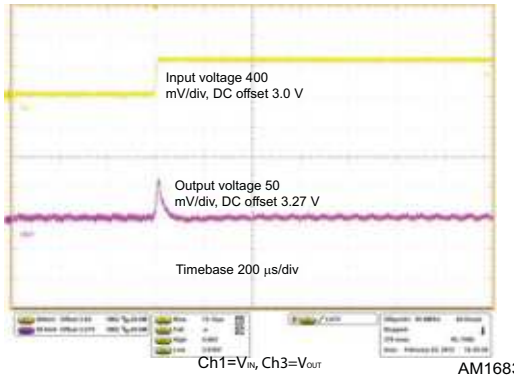

Ch1=V_{IN}, Ch3=V_{OUT} AM16833v1

Figure 14. Line transient response @ V_{IN} = 4 V to 3.6 V

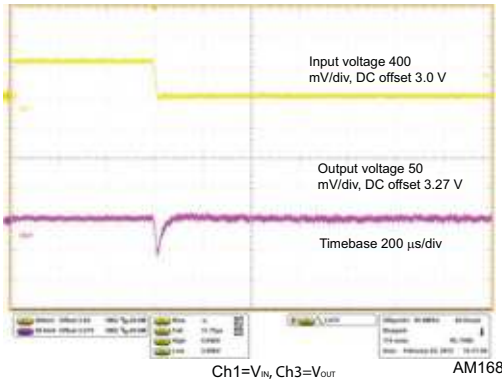

Ch1=V_{IN}, Ch3=V_{OUT} AM16834v1

Figure 15. Load transient response @ V_{IN}=1.8 V, I_{OUT} = 100 to 300 mA

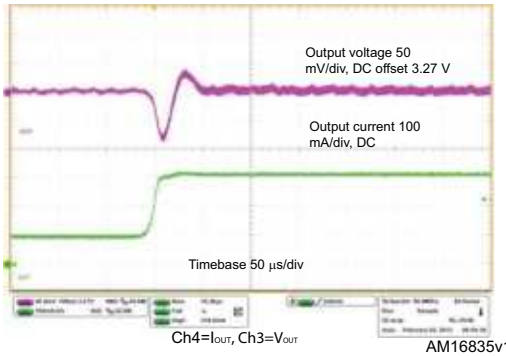

Ch4=I_{OUT}, Ch3=V_{OUT} AM16835v1

Figure 16. Load transient response @ V_{IN}=1.8 V, I_{OUT} = 300 mA to 100 mA

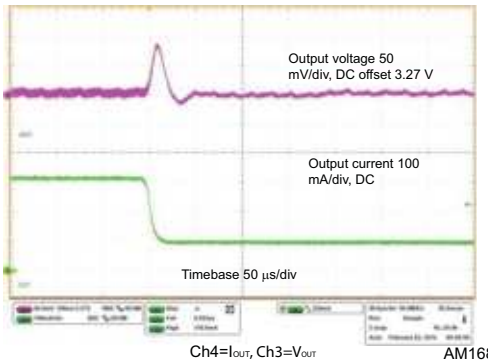

Ch4=I_{OUT}, Ch3=V_{OUT} AM16836v1

Figure 17. Load transient response @ V_{IN}=3.6 V, I_{OUT} = 100 to 300 mA

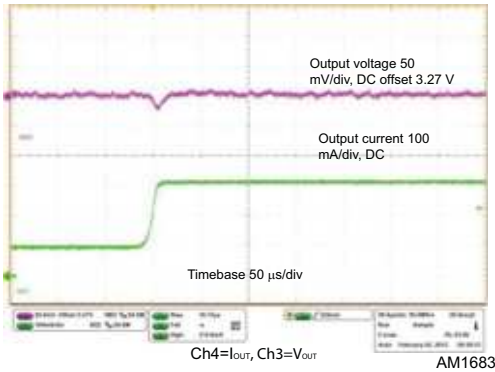

Ch4=I_{OUT}, Ch3=V_{OUT} AM16837v1

Figure 18. Load transient response @ V_{IN}=3.6 V, I_{OUT} = 300 mA to 100 mA

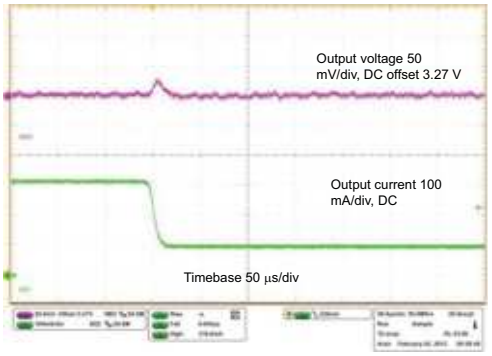

Ch4=I_{OUT}, Ch3=V_{OUT} AM16838v1

Figure 19. Load transient response @ V_{IN}=5.5 V, I_{OUT} = 100 to 300 mA

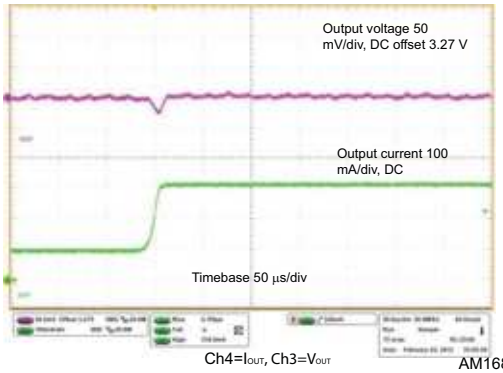

Ch4=I_{OUT}, Ch3=V_{OUT} AM16839v1

Figure 20. Load transient response @ V_{IN}=5.5 V, I_{OUT} = 300 to 100 mA

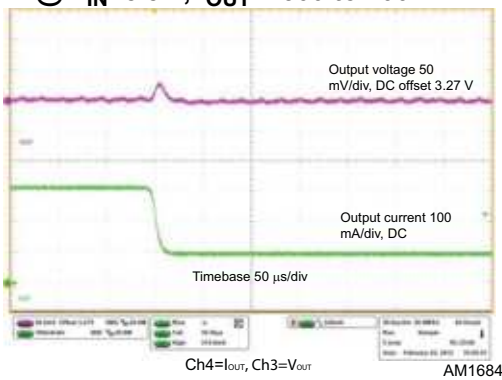

Ch4=I_{OUT}, Ch3=V_{OUT} AM16840v1

Figure 21. Startup after enable @ V_{IN}=1.8 V

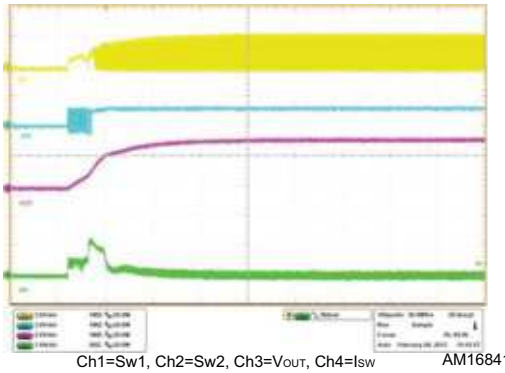

Ch1=Sw1, Ch2=Sw2, Ch3=V_{OUT}, Ch4=I_{SW} AM16841v1

Figure 22. Startup after enable @ V_{IN}=3.6 V

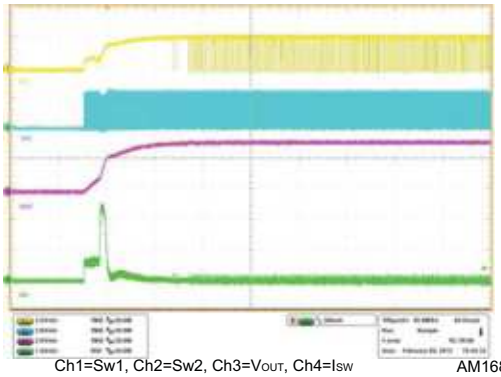

Ch1=Sw1, Ch2=Sw2, Ch3=V_{OUT}, Ch4=I_{SW} AM16842v1

Figure 23. Startup after enable @ V_{IN}=5.5 V

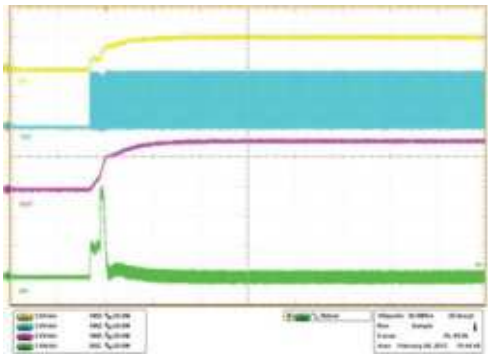

Ch1=Sw1, Ch2=Sw2, Ch3=V_{OUT}, Ch4=I_{SW} AM16843v1

Figure 24. Output voltage vs. output current

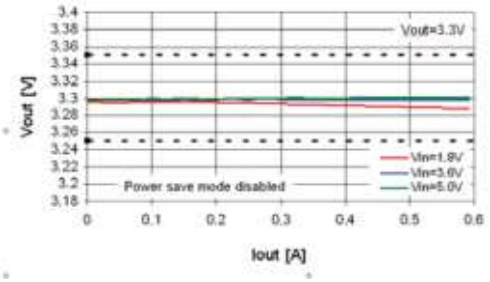

AM16844v1

Figure 25. OCP threshold



GIPD0410131030LM

Figure 26. 100 Hz PWM dimming function



GIPD0710131030LM

Figure 27. Startup 5 V_{IN} LED 1 A



GIPD0710131035LM

Figure 28. Startup 2.5 V_{IN} LED 1 A



GIPD0710131037LM

7 General description

The STBB3JCC is a high efficiency dual mode buck-boost switch mode converter. Thanks to the 4 internal switches, 2 P-channels and 2 N-channels, it is able to deliver a well-regulated output voltage using a variable input voltage which can be higher than, equal to, or lower than the desired output voltage. This solves most of the power supply problems that circuit designers face when dealing with battery-powered equipment.

The controller uses a peak current mode technique in order to obtain good stability in all possible conditions of input voltage, output voltage and output current. In addition, the peak inductor current is monitored to avoid saturation of the coil.

The STBB3JCC can work in two different modes: PWM mode or power save mode. Top-class line and load transients are achieved thanks to a feed-forward technique and due to the innovative control method specifically designed to optimize the performance in the buck-boost region where input voltage is very close to the output voltage. In HB WLED driver configuration, the MODE pin must be set high in full PWM mode operation.

The STBB3JCC is self-protected from overcurrent and overtemperature. Undervoltage lockout and soft-start guarantee proper operation during startup.

Input voltage and ground connections are split into power and signal pins. This allows reduction of internal disturbances when the 4 internal switches are working. The switch bridge is connected between the V_{IN} and PGND pins while all logic blocks are connected between V_{INA} and GND.

7.1 Dual mode operation

The STBB3JCC works in PWM mode or in power save mode (PS) according to the different status of the MODE pin. If the MODE pin is pulled high the device works in PWM only. In this case the device operates at 2 MHz fixed frequency pulse width modulation (PWM mode) in all line/load conditions. In this condition, the STBB3JCC provides the best dynamic performance. If the MODE pin is pulled low, at low average current the STBB3JCC enters PS mode allowing very low power consumption and therefore obtaining very good efficiency event at light load. When the average current increases, the device automatically switches to PWM mode in order to deliver the power needed by the load. In PS mode the STBB3JCC implements a burst mode operation: if the output voltage increases above its nominal value the device stops switching; as soon the V_{OUT} falls below the nominal value the device restarts switching with a programmed average current higher than the one needed by the load. *Figure 29* shows PS mode operation areas vs. output current in typical application conditions. If the device is used in HB LED driver configuration, the MODE pin must be pulled high to assure the best dynamic performance at the start-up phase.

Figure 29. Auto mode vs. output current

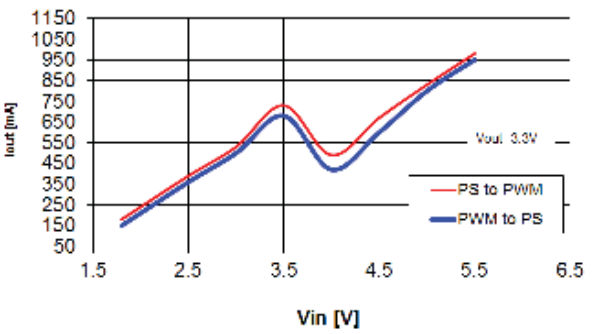

7.2 External synchronization

The STBB3JCC implements the external synchronization function. If an external clock signal is applied to the MODE/SYN pin with a frequency between 1.6 MHz and 2.4 MHz and with proper low/high levels, the device automatically is in PWM mode and the external clock is used as switching oscillator.

7.3 Enable pin

The device turns on when the EN pin is pulled high. If the EN pin is low the device stops switching and all the internal blocks are turned off. In this condition the current drawn from V_{IN}/V_{INA} is below 1 µA in the whole temperature range. In addition the internal switches are in off-state so the load is electrically disconnected from the input; this avoids unwanted current leakage from the input to the load. The EN pin can be used as dimming function by applying a square waveform from100 to 300 Hz.

7.4 Protection features

The STBB3JCC implements different types of protection features.

7.4.1 Soft-start and overcurrent

After the EN pin is pulled high, or after a suitable voltage is applied to V_{IN}, V_{INA} and EN, the device initiates the startup phase. The average current limit is gradually increased while the output voltage increases. As soon as the output voltage reaches 1.0 V, the average current limit is set to its nominal value.

7.4.2 Undervoltage lockout

The undervoltage lockout function prevents improper operation of the STBB3JCC when the input voltage is not high enough. When the input voltage is below the UVLO threshold, the device is in shutdown mode. The hysteresis of 100 mV prevents unstable operation when the input voltage is close to the UVLO threshold.

7.4.3 Overtemperature protection

An internal temperature sensor continuously monitors the IC junction temperature. If the IC temperature exceeds 160 °C (typ.), the device stops operating. As soon as the temperature falls below 140 °C (typ.), normal operation is restored.

8 Application information

8.1 Programming the output voltage

The external resistor divider must be connected between V_{OUT} and GND and the middle point of the divider must be connected to FB.

The value for the resistor R2, placed between FB and GND, should be chosen in order to set the divider current at 10 µA. The recommended value for this resistor is in the range of 50 kΩ but to reduce the power consumption a maximum value of 20 kΩ can be used.

The value of the resistor R1, connected between V_{OUT} and FB, is function of the output voltage and can be calculated using the equation 1:

Equation 1

$$R1 = R2 \times \left(\frac{V_{OUT}}{V_{FB}} - 1 \right)$$

Figure 30. Application schematic

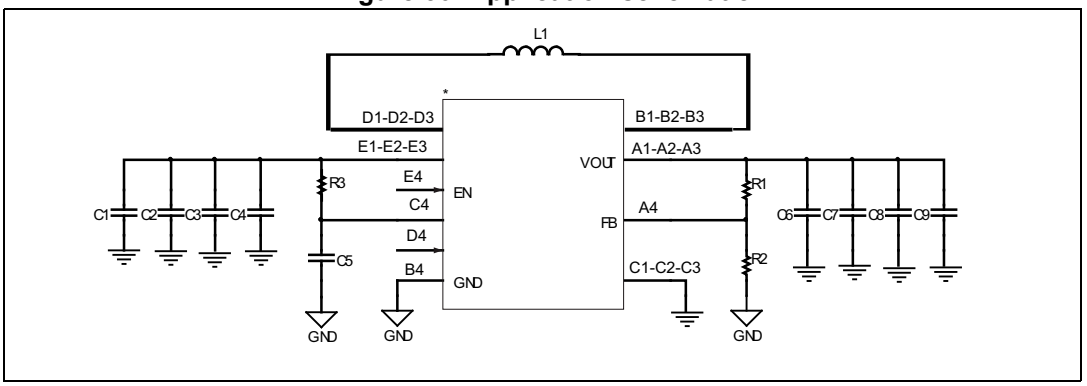

8.2 Programming the output constant current for HB WLED

Sensing resistor

The STBB3JCC feedback pin voltage is 100 mV, this makes the STBB3JCC suitable for LED driver applications, minimizing the power dissipation across the external sensing resistor and improving the overall system efficiency. The sensing resistor value is got by the following formula:

Equation 2

$$R_{sense} = R2 = \frac{V_{FB}}{I_{LED}} = \frac{100mv}{1A} = 0.1\Omega$$

$$P_{Diss_RSENSE} = R2 \cdot I_{LED} = 0.1 \cdot 1^2 = 0.1W$$

Figure 31. Application schematic HB WLED driver

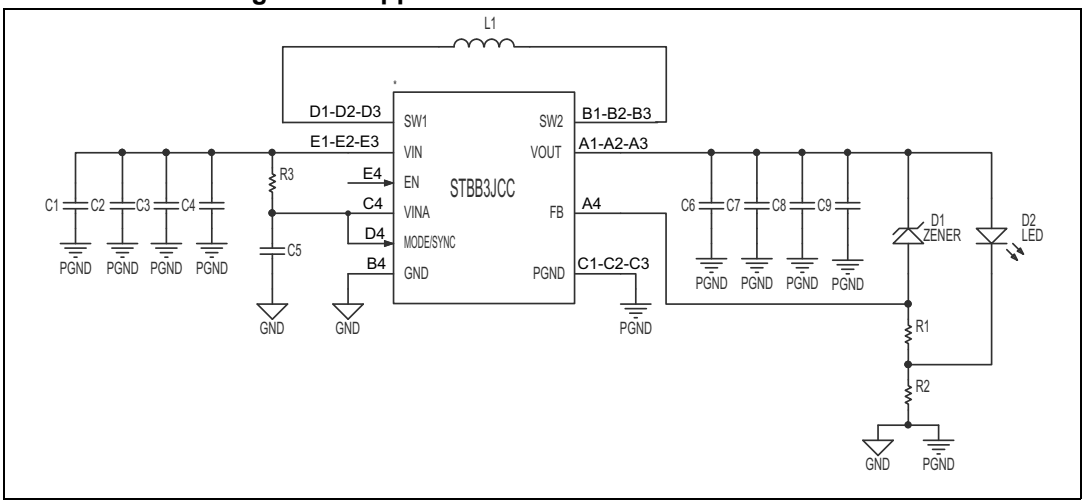

Table 8. List of external components(1)

Component	Manufacturer	Part number	Value
C1, C2	Murata	GRM188R60J106ME84	10 µF
C6	Murata	GRM31CB31E226KE15	22 µF
C5	TDK	C1608X7R1H225K	2.2 µF
L1	TDK	VLF403215MT-1R5N	1.5 µH
	Coilcraft	XFL4020-152MEB	
R1(2)	Standard resistor		4.7 K
R3	Standard resistor		from 47 to 100 Ω
D1(2)	Zener diode		4.7 V 1/4 W
R2(3)	Standard resistor		0.1 Ω 1/4 W
LED	White LED		3.7 V_F I_{LED}=1 A

1. Above listed components refer to typical application. Operation of the STBB3JCC is not limited to the choice of these external components.
2. R1 and D1 are used as V_{OUT} overvoltage protection in case of open-LED failure (these components are optional and they are not mounted on the evaluation board).
3. R2 is calculated according to the following formula: $R2 = \frac{V_{FB}}{I_{LED}} = \frac{100mV}{I_{LED}}$

8.3 Inductor selection

The inductor is the key passive component for switching converters. With a buck-boost device, the inductor selection must take into consideration the following two conditions in which the converter works:

- as buck region at the maximum input voltage
- as boost region at the minimum input voltage

Two critical inductance values are then obtained according to the following formulas:

Equation 3

$$L_{MIN_BUCK} = \frac{V_{OUT} \times (V_{IN_MAX} - V_{OUT})}{V_{IN_MAX} \times f_S \times \Delta I_L}$$

Equation 4

$$L_{MIN_BOOST} = \frac{V_{IN_MIN} \times (V_{OUT} - V_{IN_MIN})}{V_{OUT} \times f_S \times \Delta I_L}$$

where f_s is the minimum value of the switching frequency and ΔI_L is the inductor ripple current. The amplitude of the inductor ripple current is typically set between 20% and 40% of the maximum inductor current. To guarantee an inductor ripple current always lower than the selected value ΔI_L, the higher value between L_{MIN_BUCK} and L_{MIN_BOOST} have to be chosen. In addition to the inductance value, also the maximum current which the inductor can handle must be calculated in order to avoid saturation.

Equation 5

$$I_{PEAK_BUCK} = \frac{I_{OUT}}{\eta} + \frac{V_{OUT} \times (V_{IN_MAX} - V_{OUT})}{2 \times V_{IN_MAX} \times f_S \times L}$$

Equation 6

$$I_{PEAK_BOOST} = \left(\frac{V_{OUT} \times I_{OUT}}{\eta \times V_{IN_MIN}}\right) + \frac{V_{IN_MIN} \times (V_{OUT} - V_{IN_MIN})}{2 \times V_{OUT} \times f_S \times L}$$

where η is the estimated efficiency. The maximum of the two values above must be considered when selecting the inductor.

8.4 Input and output capacitor selection

It is recommended to use ceramic capacitors with low ESR as input and output capacitors in order to filter any disturbance present in the input line and to obtain stable operation.

Minimum values of 10 µF for both capacitors, C_{IN} and C_{OUT}, are needed to achieve good behavior of the device. The input capacitor must be placed as close as possible to the device.

An R-C filter is added to VINA pin (R3-C5 *Figure 30* and *Figure 31*) to assure a clean input voltage to the internal logic block.

8.5 Layout guidelines

Figure 32. Assembly layer

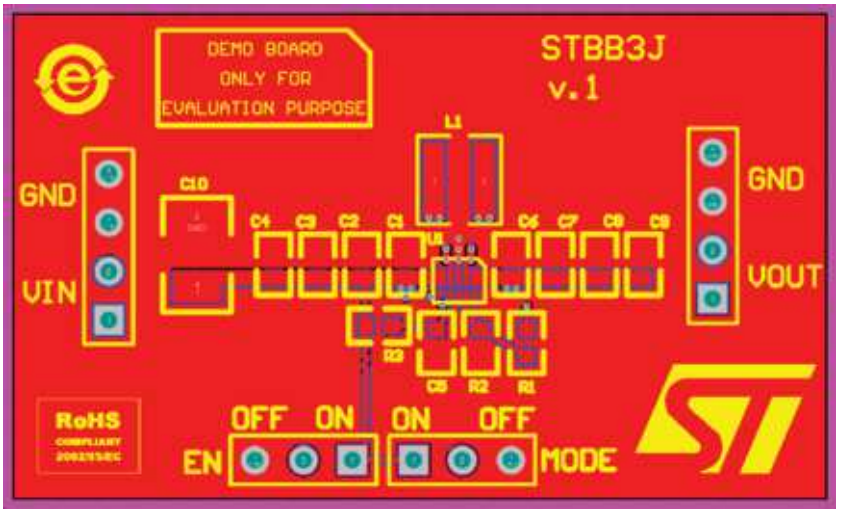

Figure 33. Top layer

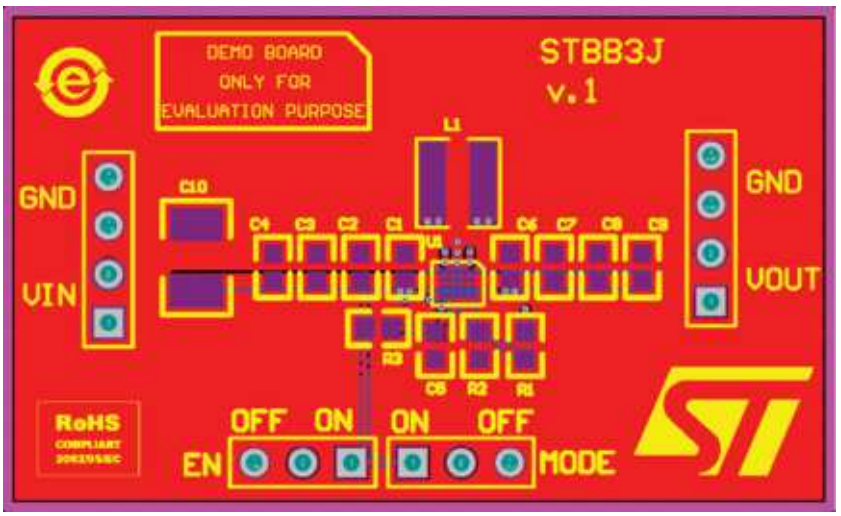

Figure 34. Bottom layer

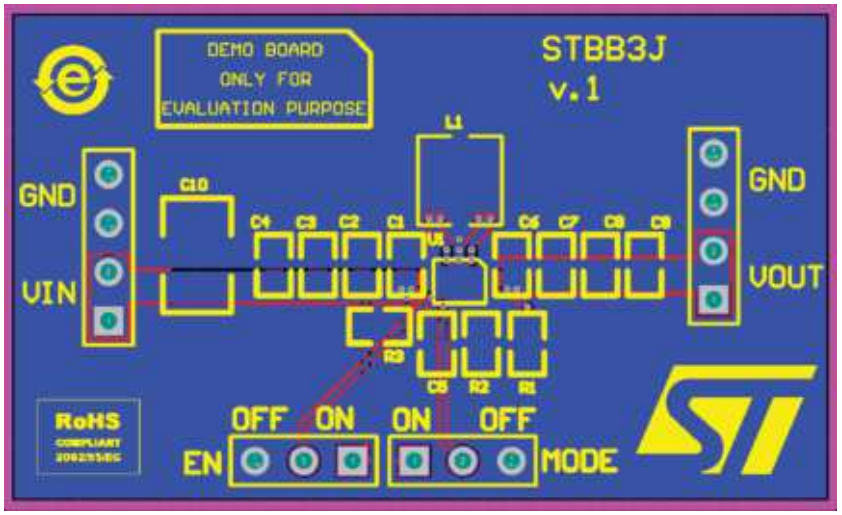

AM16849v1

Figure 35. Assembly layer for HB WLED

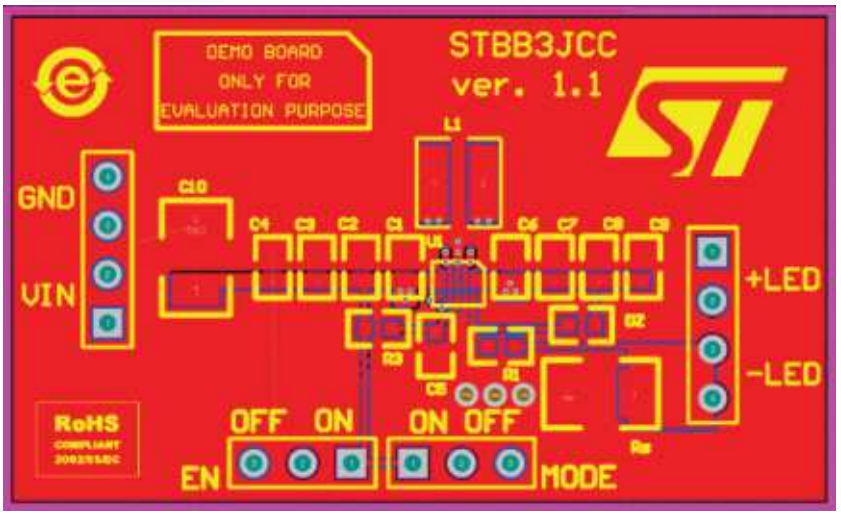

GIPD0510130950LM

Figure 36. Top layer for HB WLED

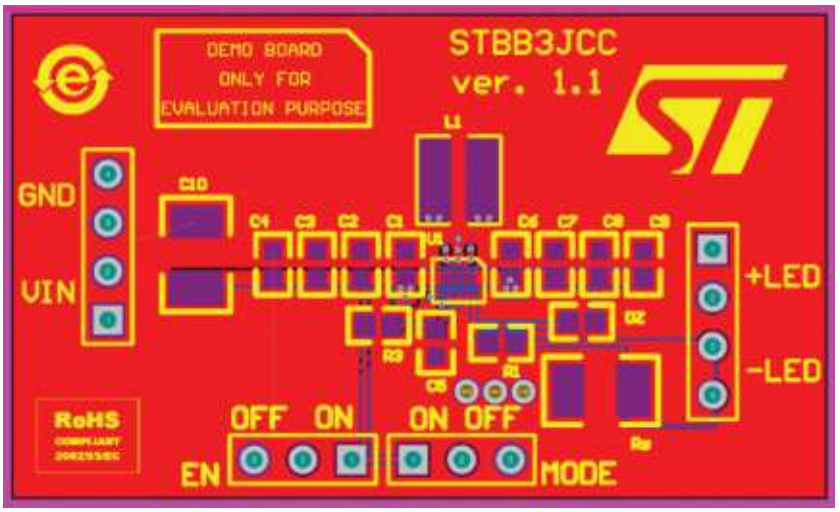

GIPD0510130955LM

Figure 37. Bottom layer for HB WLED

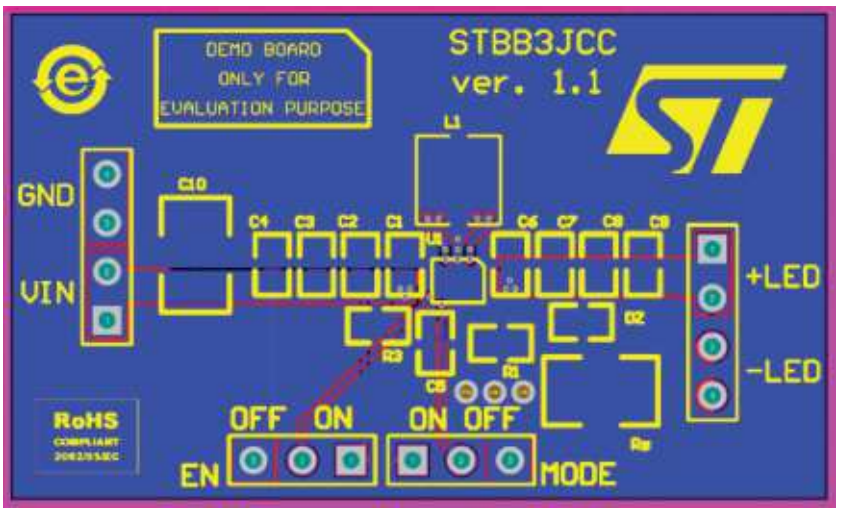

GIPD0510130957LM

9 Package information

In order to meet environmental requirements, ST offers these devices in different grades of ECOPACK packages, depending on their level of environmental compliance. ECOPACK specifications, grade definitions and product status are available at: www.st.com. ECOPACK is an ST trademark.

Figure 38. Flip Chip 20 (2.5 x 1.75 mm) outline

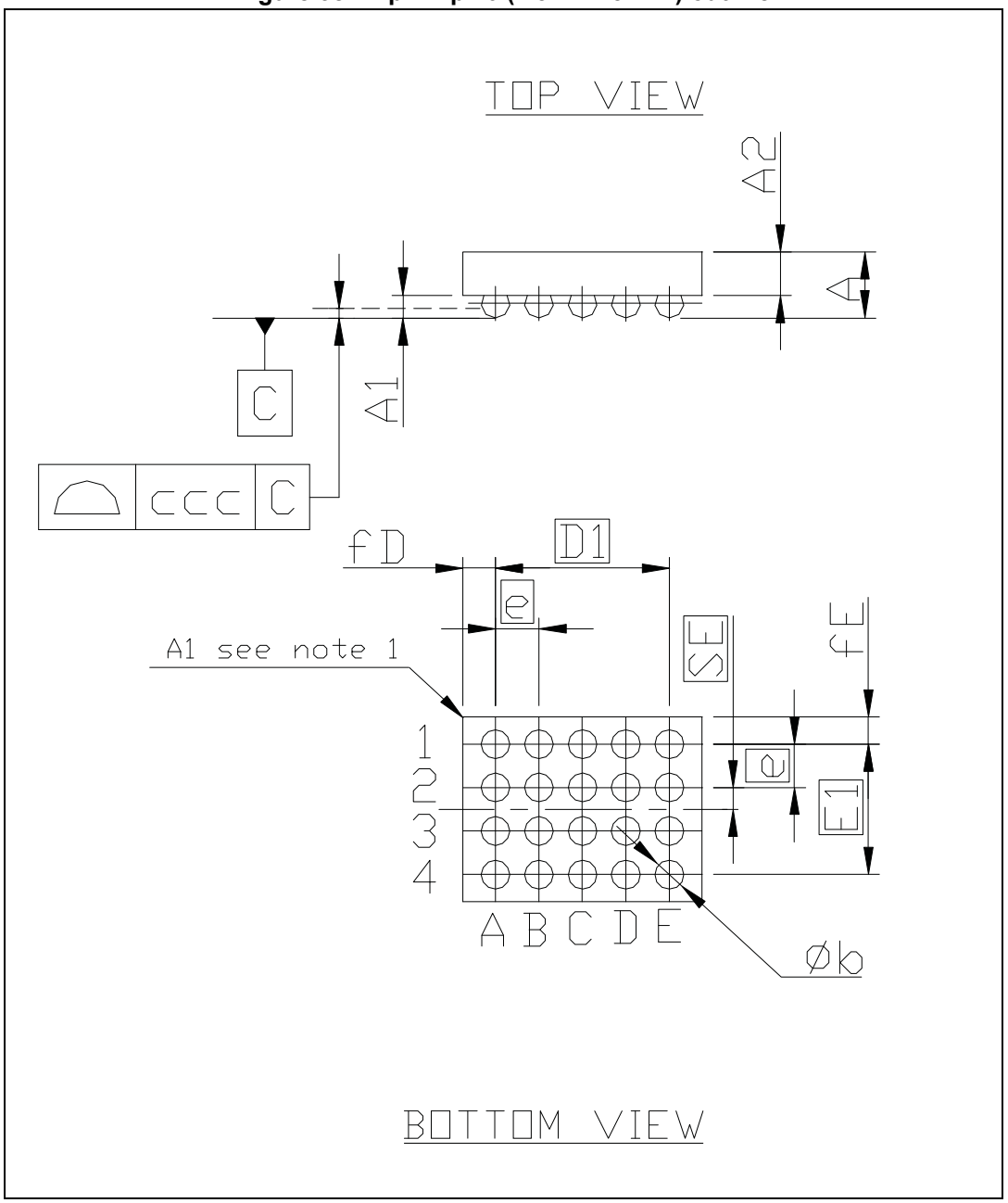

Table 9. Flip Chip 20 (2.5 x 1.75 mm) mechanical data

Dim.	mm		
	Min.	Typ.	Max.
A	0.50	0.55	0.60
A1	0.17	0.20	0.23
A2	0.33	0.35	0.37
b	0.21	0.25	0.29
D	2.485	2.515	2.545
D1		1.6	
E	1.731	1.761	1.791
E1		1.2	
e		0.40	
fD	0.447	0.457	0.467
fE	0.27	0.28	0.29
SE		0.20	
ccc		0.075	

Note: The terminal A1 on the bump side is identified by a distinguishing feature (for instance by a circular “clear area” typically 0.1 mm diameter) and/or a missing bump.

The terminal A1 on the backside of the product is identified by a distinguishing feature (for instance by a circular “clear area” less than 0.5 mm diameter).

Figure 39. Flip Chip 20 (2.5 x 1.75 mm) recommended footprint

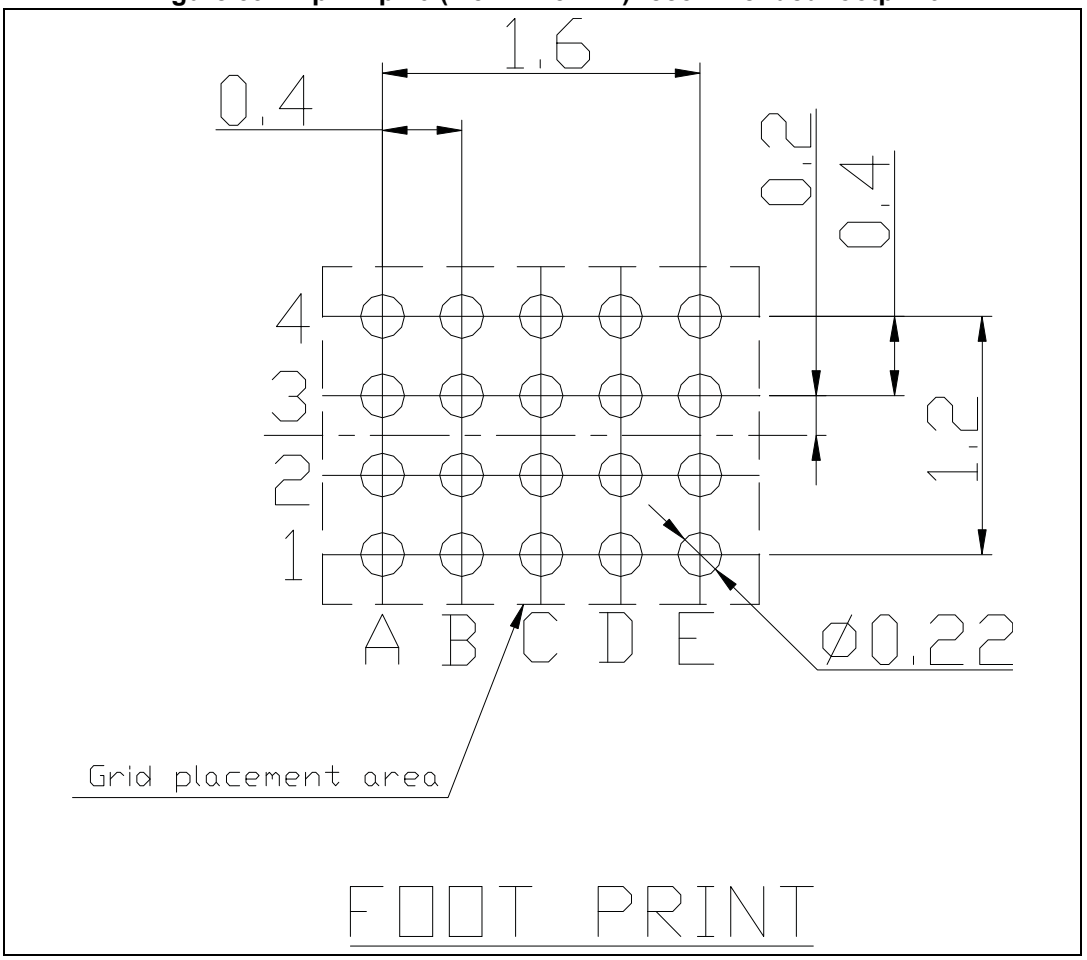

10 Revision history

Table 10. Document revision history

Date	Revision	Changes
23-Oct-2013	1	Initial release.
25-Jun-2014	2	Document status promoted from preliminary to production data.
25-Nov-2014	3	Removed footnote from P-channel and N-channel on-resistance parameter in Table 6.
28-Jan-2015	4	Updated I_{SWL} max. value in Table 6.
16-Dec-2015	5	Updated Figure 1, Figure 2, Figure 30 and Figure 31. Updated Table 2 and Table 8.
31-Oct-2019	6	Updated marking value in Table 1: Device summary.
11-Nov-2019	7	Updated marking value in *Table 1: Device summary*.

IMPORTANT NOTICE – PLEASE READ CAREFULLY

STMicroelectronics NV and its subsidiaries (“ST”) reserve the right to make changes, corrections, enhancements, modifications, and improvements to ST products and/or to this document at any time without notice. Purchasers should obtain the latest relevant information on ST products before placing orders. ST products are sold pursuant to ST’s terms and conditions of sale in place at the time of order acknowledgement.

Purchasers are solely responsible for the choice, selection, and use of ST products and ST assumes no liability for application assistance or the design of Purchasers’ products.

No license, express or implied, to any intellectual property right is granted by ST herein.

Resale of ST products with provisions different from the information set forth herein shall void any warranty granted by ST for such product.

ST and the ST logo are trademarks of ST. For additional information about ST trademarks, please refer to *www.st.com/trademarks*. All other product or service names are the property of their respective owners.

Information in this document supersedes and replaces information previously supplied in any prior versions of this document.

© 2019 STMicroelectronics – All rights reserved