STHV800

Octal ±90 V, ±2 A, 3-level RTZ, high-speed ultrasound pulser

Data brief

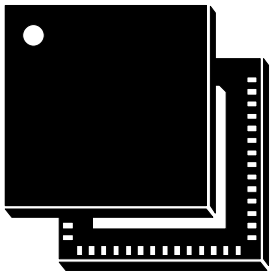

TFLGA-56LD (8x8x0.9 mm)

Features

- High-density ultrasound transmitter
- Two independent half-bridges per channel
- 0 to ±90 V output voltage
- Power-up free
- Synchronization of the input signals (selectable) by an external clock
- Up to 20 MHz operating frequency
- Low-power, high-voltage, high-speed drivers
- 2 independently-supplied half bridges (shorted-option) for each channel, one dedicated to continuous wave (CW) mode
  - Main half bridge:
    - ±2 A source and sink current
    - Down to 20 ps jitter
    - Low 2nd harmonic distortion
  - CW half bridge:
    - ±0.3 A source and sink current
    - Down to 10 ps jitter
    - Very low power consumption
- Fully integrated real clamping-to-ground function
  - 8 Ω synchronous active clamp
  - ±2 A source and sink current
- Fully integrated TR switch
  - 8 Ω ON resistance
  - Up to 300 MHz BW
  - Current consumption down to 10 µA in RX phase
  - Receiver multiplexing function
- 1.8 V to 3.6 V CMOS logic interface
- Auxiliary integrated circuits
  - Noise blocking diodes
  - Anti-leakage on output node
  - Fully self-biasing architecture
  - Thermal protection
- Latch-up free due to HV SOI technology
- Very few external passive components or supplies needed

Applications

- Medical ultrasound imaging
- Pulse waveform generator
- NDT ultrsound transmission
- Piezoelectric transducer drivers
- Point-of-care ultrasound imaging equipment

Table 1: Device summary

Order code	Package	Packing
STHV800L	TFLGA-56LD	Tape and reel

For further information contact your local STMicroelectronics sales office

www.st.com

1 Description

The STHV800 is an octal, monolithic, high-voltage and high-speed pulse generator. It is designed for medical ultrasound applications, but can be used for other piezoelectric, capacitive or MEMS transducers.

The device integrates a controller logic interface circuit (compatible with both 1.8 V and 3.3 V input signals), level translators, MOSFET gate drivers, noise blocking diodes, and high power P-channel and N-channel MOSFETs as the output stage for each channel. These MOSFETs are capable of providing more than 2 A of peak output current. Each channel has a dedicated bridge in order to reduce power dissipation and jitter during continuous wave mode (peak current is limited to 0.3 A). This CW bridge has dedicated power supplies (HV_CW) which are fully independent on the main HV supplies.

These HV_CW supplies can be shorted to the HV supplies. The fundamental structure of each channel also consists of active clamping to ground circuitry, anti-leakage and anti-memory block, a thermal sensor to protect the device and an integrated TR-switch (just 8 Ω as equivalent resistor) to connect the HV output to its LV output, guaranteeing strong decoupling during the transmission phase.

The eight independent T/R switches can be used in both a dedicated RX chain per channel or in a multiplexing configuration.

The clamp circuit has a current capability up to 2 A and works directly on the output pin, carrying this node exactly to zero. This feature allows minimized injection change during the transition from clamp to RX state.

In addition, the STHV800 includes self-biasing circuitry which allows very low power consumption during the RX phase (down to 200 µW global power dissipation) and thermal shutdown block sensing by an external dedicated pin (THSD).

One of the main benefits of this device is that it requires very few external components: only decoupling capacitors on the HV and LV supplies, and a resistor to pull up the THSD pin (moreover, this resistor can be shared by many devices).

Each channel is driven independently by only 2 digital bits, which in CW mode become one bit. An external clock can be used with the STHV800 to synchronize all the input signals. This feature, however, is optional: if the CK pin is tied to ground the device works in asynchronous mode.

Figure 1: STHV800 internal block diagram

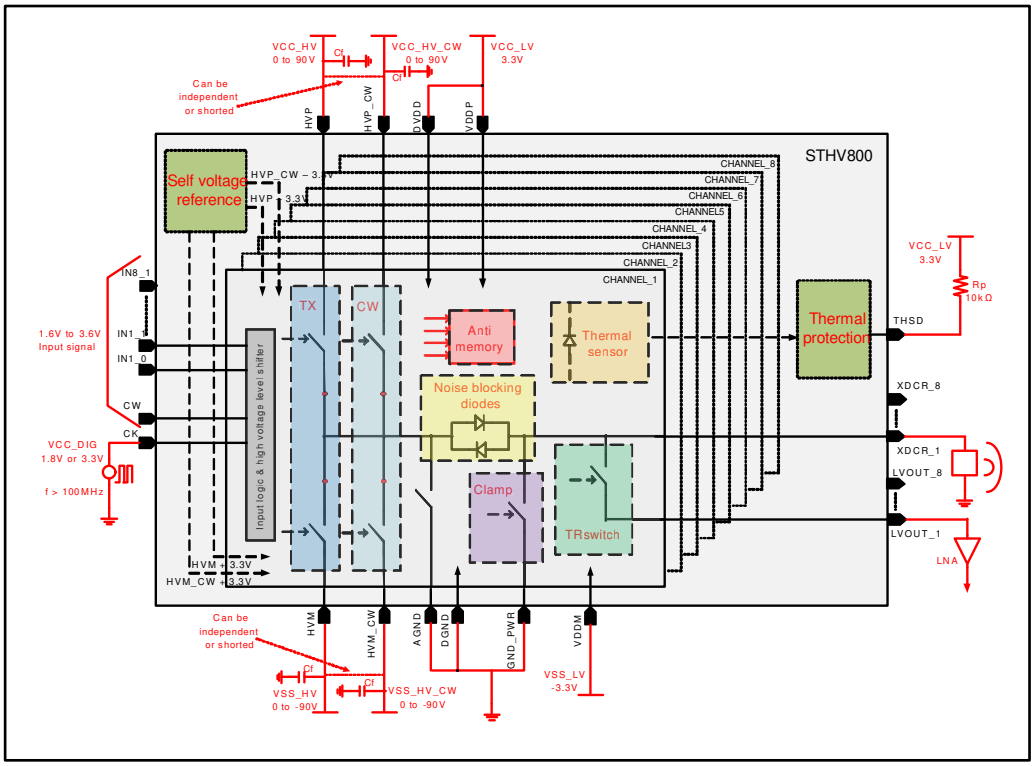

Figure 2: XDCR output in DUPLEX mode from single channel - PW and CW composition example

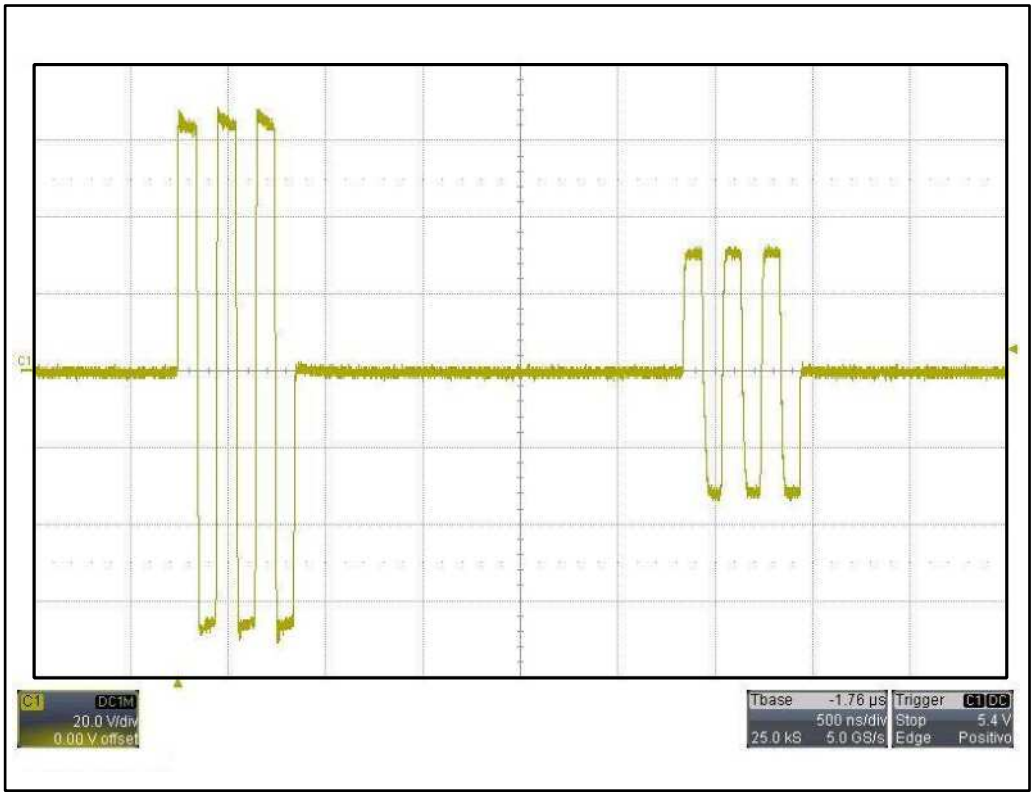

2 Revision history

Table 2: Document revision history

Date	Revision	Changes
21-Mar-2014	1	Initial release.
07-Apr-2014	2	Changed order code from STHV800QTR to STHV800L in *Table 1: Device summary*

Please Read Carefully

Information in this document is provided solely in connection with ST products. STMicroelectronics NV and its subsidiaries ("ST") reserve the right to make changes, corrections, modifications or improvements, to this document, and the products and services described herein at any time, without notice.

All ST products are sold pursuant to ST's terms and conditions of sale.

Purchasers are solely responsible for the choice, selection and use of the ST products and services described herein, and ST assumes no liability whatsoever relating to the choice, selection or use of the ST products and services described herein.

No license, express or implied, by estoppel or otherwise, to any intellectual property rights is granted under this document. If any part of this document refers to any third party products or services it shall not be deemed a license grant by ST for the use of such third party products or services, or any intellectual property contained therein or considered as a warranty covering the use in any manner whatsoever of such third party products or services or any intellectual property contained therein.

UNLESS OTHERWISE SET FORTH IN ST'S TERMS AND CONDITIONS OF SALE ST DISCLAIMS ANY EXPRESS OR IMPLIED WARRANTY WITH RESPECT TO THE USE AND/OR SALE OF ST PRODUCTS INCLUDING WITHOUT LIMITATION IMPLIED WARRANTIES OF MERCHANTABILITY, FITNESS FOR A PARTICULAR PURPOSE (AND THEIR EQUIVALENTS UNDER THE LAWS OF ANY JURISDICTION), OR INFRINGEMENT OF ANY PATENT, COPYRIGHT OR OTHER INTELLECTUAL PROPERTY RIGHT.

ST PRODUCTS ARE NOT DESIGNED OR AUTHORIZED FOR USE IN: (A) SAFETY CRITICAL APPLICATIONS SUCH AS LIFE SUPPORTING, ACTIVE IMPLANTED DEVICES OR SYSTEMS WITH PRODUCT FUNCTIONAL SAFETY REQUIREMENTS; (B) AERONAUTIC APPLICATIONS; (C) AUTOMOTIVE APPLICATIONS OR ENVIRONMENTS, AND/OR (D) AEROSPACE APPLICATIONS OR ENVIRONMENTS. WHERE ST PRODUCTS ARE NOT DESIGNED FOR SUCH USE, THE PURCHASER SHALL USE PRODUCTS AT PURCHASER'S SOLE RISK, EVEN IF ST HAS BEEN INFORMED IN WRITING OF SUCH USAGE, UNLESS A PRODUCT IS EXPRESSLY DESIGNATED BY ST AS BEING INTENDED FOR "AUTOMOTIVE, AUTOMOTIVE SAFETY OR MEDICAL" INDUSTRY DOMAINS ACCORDING TO ST PRODUCT DESIGN SPECIFICATIONS. PRODUCTS FORMALLY ESCC, QML OR JAN QUALIFIED ARE DEEMED SUITABLE FOR USE IN AEROSPACE BY THE CORRESPONDING GOVERNMENTAL AGENCY.

Resale of ST products with provisions different from the statements and/or technical features set forth in this document shall immediately void any warranty granted by ST for the ST product or service described herein and shall not create or extend in any manner whatsoever, any liability of ST.

ST and the ST logo are trademarks or registered trademarks of ST in various countries.

Information in this document supersedes and replaces all information previously supplied.

The ST logo is a registered trademark of STMicroelectronics. All other names are the property of their respective owners.

© 2014 STMicroelectronics - All rights reserved

STMicroelectronics group of companies

Australia - Belgium - Brazil - Canada - China - Czech Republic - Finland - France - Germany - Hong Kong - India - Israel - Italy - Japan - Malaysia - Malta - Morocco - Philippines - Singapore - Spain - Sweden - Switzerland - United Kingdom - United States of America

www.st.com